SANTOS – INPEX - MITTWELL

COMPILED FOR

SANTOS LIMITED

(A.B.N. 80 007 550 923)

CALLISTER-1

BASIC DATA REPORT

PREPARED BY:
R. Subramanian
(Consultant)
January 2005

CALLISTER-1

BASIC DATA REPORT

TABLE OF CONTENTS

CALLISTER-1

BASIC DATA REPORT

TABLE OF CONTENTS

LOCATION MAP

141° 30' 00"
142° 00' 00"
-38° 30' 00"
-39° 00' 00"

16
Gorae 2
15
4
Eumeralla 1
Tyrendarra 13
2
Shaw 1
5
Narrawong 13
Codrington 1
VIC/P 41 (V)
Portland North 1
Trewalla 5
Portland
Tarragal 3
10
Yambuk 2
11
4
Port Fairy
VIC/P 37 (V)
Voluta 1
Bridgewater Bay 1
Callister 1
VIC/P 44
VIC/P 46
Callister 1
VIC/P 51
VIC/P 61
Hill 1
VIC/P 50
Amrit 1
VIC/P 52

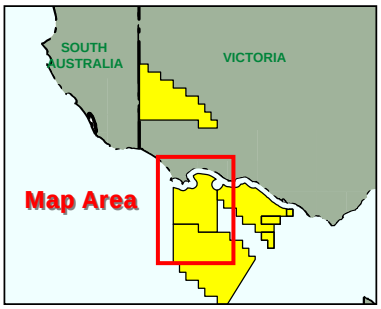

Legend

Santos Permit

Santos

VIC/P 51 - Victoria

Callister 1

Location Map

10 0 10 20

Kilometres

Scale: 1:500 000

Date: April 2005, File No. OTWAY 641

GDA

GENERAL DATA CARD

WELL: CALLISTER-1	**WELL CATEGORY**: Offshore Gas Exploration Well **WELL INTENT:** Gas	**SPUD:** 13-10-04 **TD REACHED:** 04-11-04 **RIG RELEASED**: 17-11-04 **CMPLT**: -
		RIG: JACK BATES
SURFACE LOCATION: (GDA94) **LAT:** 38° 31' 59.690" S **LONG:** 141° 28' 23.462" E **NORTHING:** 5734911.3m **EASTING:** 541241.7m		**STATUS**: Plugged and Abandoned
SEISMIC STATION: OP80A-49 2D Survey SP 1514		**REMARKS**:
ELEVATION SEA FLOOR: -129.4m LAT **RT** +29.0m LAT		
BLOCK/LICENCE: Victoria – Otway Basin VIC/P51		
TD 3917 m (Logr Extrap) 3914 m (Drlr)		
PBTD - m (Logr) - m(Drlr)		
TYPE STRUCTURE: Faulted Horst Block Closure		
TYPE COMPLETION: NIL		
ZONE(S): -		

HOLE SIZE	CASING SIZE	SHOE DEPTH	TYPE
914mm	762mm	192m	460 kg/m X56
445mm	340mm	778m	101 kg/m L80 BTC
311mm	244mm	2538m	70 kg/m L80

TYPE OF LOG	FROM (m)	TO (m)	REPEAT SECTION	TIME SINCE LAST CIRC	BHT
MWD 311mm (12.25") Gamma Ray, Resistivity, Annular Pressure, Vibration, Surveys (2 runs)	787.5	2550			
MWD 216mm (8.5") Gamma Ray, Resistivity, Annular Pressure, Vibration, Surveys (2 runs)	2550	3914			
WIRELINE SUITE 1 :					
PEX-DLT-DSI					
GR	2550	100	Down log	21.30 hrs	87°C
Resistivity	2550	778			
SP	2550	778			
Caliper	2550	778			
Dt (Full waveforms)	2550	778			
Neutron-Density	2550	778			
WIRELINE SUITE 2 :					
Triple-Combo					
GR	3877	2442	Down log	19.30 hrs	131°C
Spectral GR	3877	2442			
Resistivity	3917	2442			
SP	3870	2442			
HCAL	3867	2442			
Sonic (Upper Dipole & WFT)	3908	2469			
Neutron-Density	3885	2446			
MDT-GR (TOTAL : 26, 5 tight, 21 Lost Seals, No samples collected)	3400	3812	Run 1	26:40 hrs	132°C
CMR	3375	3917	Run 1	36:45 hrs	135°C
MSCT-GR (TOTAL : 26 Cores cut, 11 good, 3 partial,12 missing, 53.8% recovery)	3158m	3865m	Run 1	11:45 hrs	137°C
CSI CHECKSHOT	600m	3903m	Run 1	24:15 hrs	138°C

NO PRODUCTION TESTS WERE CONDUCTED AT CALLISTER-1

SECTION 1: WELL HISTORY

1.1 INTRODUCTION

Callister-1 was drilled as an Otway Basin gas exploration well in the Victoria Offshore VIC/P51 licence. The Surface Location is Latitude: 38° 31' 59.690" South, Longitude: 141° 28' 23.462" East (GDA94), Northing: 5734911.3m, Easting: 541241.7m (MGA-94). The Seismic Reference is OP80A-49 2D Survey SP 1514. The location lies approximately 24 km southwest of the town of Portland, 10 km east of Bridgewater Bay-1, 18 km southeast of Voluta-1 and 45 km northwest of Hill-1 (see Figure 1).

Callister-1 is located in 129.4m of water and was drilled by the semi-submersible drilling rig "Jack Bates".

The Callister-1 exploration wildcat well was designed to test one of three adjacent structural culminations that form the Callister Prospect, within the VIC/P51 Permit. The well was planned to be drilled to a total depth of 3629mRT. The Callister Prospect was a test of a new and as yet unproven Belfast-Paaratte gas play and the proven Eumeralla–Waarre gas play. The well would test two objectives within the Callister A Culmination, the largest of three, adjacent, horst block closures defined primarily on the 2003 OS03 2D seismic dataset. Success was dependent on the presence of cross fault seal for both objectives.

Callister-1 was planned to test the fault-bound structural potential of the primary target Intra-Paaratte K91 and K90 Nullawarre-equivalent deltaic sections, with up to 180m of structural relief over an area of 41 km^2. The deeper Waarre Formation secondary target has up to 400m of structural relief over an area of 36 km^2 . It was likely that significant overpressure will be encountered below the primary target, and the secondary objective would only be reached if operationally feasible.

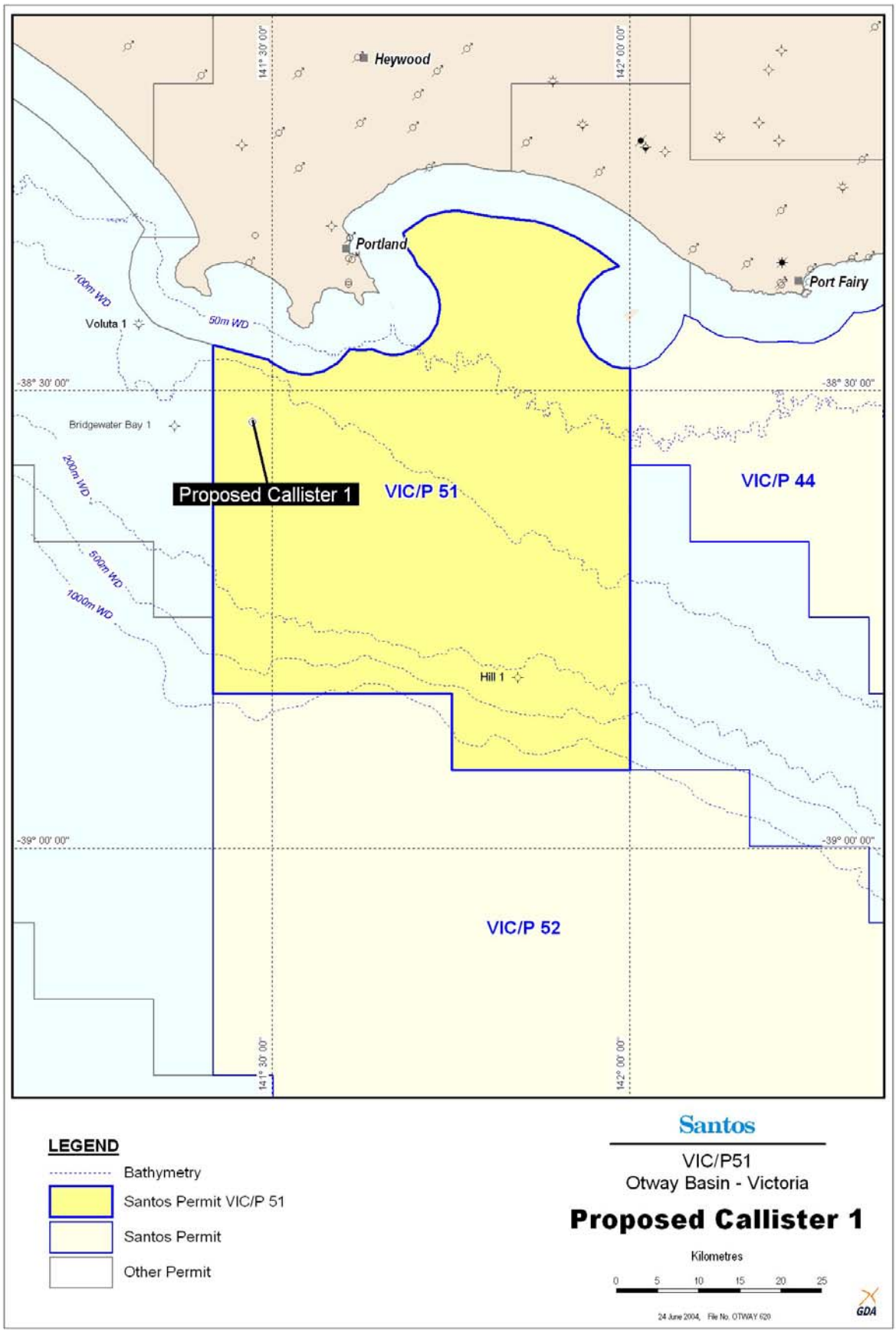

Figure 1. Callister-1 Location Map

1.2 GENERAL DATA

Well Name:	CALLISTER-1	
Well Classification:	Offshore Gas Exploration	
Interest Holders:	Santos Ltd	55%
	Mittwell	25%
	Inpex Alpha	20%
Participating Interests:	Santos Ltd	55%
	Mittwell	25%
	Inpex Alpha	20%
Operator:	Santos Ltd.	
Location:	Offshore Victoria – Otway Basin VIC/P51.	
Surveyed Location (GDA94)	Latitude: 38° 31' 59.690" South	
	Longitude: 141° 28' 23.462" East	
	Easting: 541241.7m	
	Northing: 5734911.3m	
Seismic Location:	OP80A-49 2D Survey SP 1514	
Seismic Survey:	Multi-vintage 2D Surveys (1980-1993), OS03-2D (2003)	
Elevations:	Water Depth -129.4m LAT	
	Rotary Table +29.0m LAT	
Total Depth:	Driller : 3914m RT	
	Logger : 3917m RT	
Status:	Plugged and Abandoned	
License:	VIC/P51 Offshore Victoria	
Date Drilling Commenced:	12:00 hours on 13th October 2004.	
Date Drilling Completed:	09:00 hours on 4th November 2004.	
Date Rig Released:	04:00 hours on 17th November 2004.	
Total Well Time:	13 days	
Contractor:	Transocean	
Rig:	Jack Bates (semi-submersible)	

1.3 DRILLING SUMMARY

(a) Drilling Summary (All Depths Driller's RT)

Callister-1 was spudded at 12:00 hrs on the 13th of October 2004 utilising the semi-submersible drilling facility "Jack Bates".

Bit 1, a 660mm (26") Smith DSJC, run in conjunction with a 914mm (36") hole opener, drilled the 914mm (36") phase from seafloor at 158.4m to section total depth at 192m. Returns were to the seafloor. A string of 762mm (30") (460 kg/m X56) conductor casing was run and set at 192m. The casing running tool and 914mm (36") BHA were laid out.

Bit 2, a Reed T111 was run in hole to tag the cement top at 185m and was used to drill the entire 445mm (17.5") hole section from 192m to 787.5m. The hole was circulated clean and displaced with hi-viscosity gel. A string of 340mm (13.375") (101 kg/m L80 TER) casing was run and set at 778m. The casing running tool was released and laid out along with the cement head. The blowout preventers were run and installed on the marine riser and function tested. The 445 mm (17.5") BHA was laid out.

A 311 mm (12.25") BHA with Bit 3, Reed-Hycalog DSX194 was run in hole along with MWD tools and motor to tag top of cement at 739m. The cement plugs, cement, casing shoe, rathole and 3m of new hole from 787.5m to 790 m were drilled. The hole was displaced to 1.06 SG (8.8ppg) and circulated clean. A Leak-off Test was performed to 1.58 SG (13.2ppg) EMW. The 311mm (12.25") hole was then drilled from 790m to 990m where poor penetration rates required a bit change. Bit #4, Reed-Hycalog DSX104 was run in hole and drilling continued from 990m to 2550m, the TD for the 311mm section. The 311mm (12 ¼") section was logged while drilling with Anadrill Schlumberger MWD CDR-Powerpulse tools to record Gamma Ray, Resistivity, Vibration/Shock, Annular Pressure and Deviation Survey data.

At 2550m, the hole was circulated clean and the drillstring was pulled out of hole to run intermediate wireline logs as summarised in TABLE 1: SUITE 1 WIRELINE LOGS. After rigging down Schlumberger, a string of 244mm (9.625") casing was run and cemented with the shoe at 2538m. The BOP was tested.

Thereafter, a 216mm (8.5") BHA with Bit 5, Reed-Hycalog RSX272 was run in hole along with MWD tools to tag top of cement at 2450m. The cement plugs, cement, casing shoe, rathole and 3m of new hole from 2550m to 2553m were drilled. The hole was circulated clean and a Leak-off Test was performed to 1.76 SG (14.7ppg) EMW. The 216mm (12.25") hole was then drilled from 2553m to 2662m where a bit change was required due to poor penetration rates. Bit 6, A PDC DSX104 was run and used to drill from 2662m to the Total Depth of 3914m which was reached at 09:00hrs on the 4th of November 2004. In the section from 2553m to 3914m, Mud Weight was increased in stages from MW 1.14SG (9.5ppg) to 1.69SG (14.1ppg) to combat high gas readings. The 216mm (8.5") section was logged while drilling with Anadrill Schlumberger MWD CDR-Powerpulse tools to record Gamma Ray, Resistivity, Vibration/Shock, Annular Pressure and Deviation Survey data.

At Total Depth, the hole was circulated clean and the drillstring was pulled out of hole to run wireline logs as summarised in TABLE 2: SUITE 2 WIRELINE LOGS. A wiper trip was required prior to running the pressure survey due to sticky hole.

After rigging down Schlumberger, cement abandonment plugs were set as per program, Plug 1: 3914m-3714m, Plug 2: 3714m-3514m, Plug 3: 3514m-3314m, Plug 4: 2568m-2510m, Plug 5: 2510m-2455m and Plug 6: 253m-185m. The rig was released at 04:00 hours on November 17, 2004.

(b) Mudlogging Services

Mudlogging services were provided by Baker Hughes Inteq Unit 431 with the following parameters monitored:

1. Total Gas
2. Chromatographic Gas Breakdown
3. Hydrogen Sulphide Levels
4. Depth/Rate of Penetration
5. Pipe Speed/Block Position
6. Top drive RPM
7. Top drive Torque
8. Hook Load/Weight On Bit
9. Standpipe Pressure
10. Casing Shut-in Pressure
11. Mud Pump Rate (3 pumps)
12. Mud Flow Out
13. Mud Pit Levels (18 pits)
14. Mud Weight In and Out
15. Mud Temperature In and Out
16. Carbon Dioxide

Ditch cuttings were collected at 5m intervals in the 311mm (12.25") phase from 787.5m to section total depth of 2550m. In the 216mm (8.5") section samples were collected in 3m intervals. However fast drilling rates required the sampling interval to be increased to 6m when necessary. In the zones of interest, samples were collected at 3m intervals. In addition to microscopic examination of all drilled cuttings, samples were subjected to fluoroscope examination.

A catalogue of all wellsite samples is found in SECTION 2.3: CATALOGUE OF WELLSITE SAMPLES

(c) MWD Data

Measurement while drilling (MWD) was acquired by Anadrill-Schlumberger in Callister-1. The CDR / Powerpulse was used in the 311mm (12.25") section from 787.5m to 2550m. Gamma Ray, Resistivity, Annular Pressure, Vibration Monitoring and Deviation Survey data were acquired in this phase in 2 runs. In the 216mm (8.5") section from 2550m to 3914m, similar data was recorded in 2 runs. Anadrill Schlumberger's detailed report is attached in SECTION 3.3: MWD/LWD END OF WELL REPORT

(d) Testing

No production tests were conducted at the Callister-1 location.

(e) Coring

No full hole cores were cut at the Callister-1 location.

(f) Biostratigraphy

A Palaeontology laboratory was onboard during the drilling of the 311mm (12.25") and micro-palaeontology studies were conducted to determine the casing point for that section. Additionally, palaeontology studies were conducted in the 216mm (8.5") section and used to determine termination of drilling. The preliminary Palaeontology report is attached in SECTION 2.4: PRELIMINARY PALAEONTOLOGY REPORT

(g) Electric Logging

Electric Logging Services were provided by Schlumberger Wireline Services. Two suites of electric logs were attempted at Callister-1 as follows:

TABLE 1: SUITE 1 WIRELINE LOGS

TYPE OF LOG	FROM (m)	TO (m)	REPEAT SECTION	TIME SINCE LAST CIRC	BHT
PEX-DLT-DSI					
GR	2550	100	Down log	21.30 hrs	87°C
Resistivity	2550	778			
SP	2550	778			
Caliper	2550	778			
Dt (Full waveforms)	2550	778			
Neutron-Density	2550	778			

TABLE 2: SUITE 2 WIRELINE LOGS

TYPE OF LOG	FROM (m)	TO (m)	REPEAT SECTION	TIME SINCE LAST CIRC	BHT
Triple-Combo					
GR	3877	2442	Down log	19.30 hrs	131°C
Spectral GR	3877	2442			
Resistivity	3917	2442			
SP	3870	2442			
HCAL	3867	2442			
Sonic (Upper Dipole & WFT)	3908	2469			
Neutron-Density	3885	2446			

TABLE 2: SUITE 2 WIRELINE LOGS (Continued)

TYPE OF LOG	FROM (m)	TO (m)	REPEAT SECTION	TIME SINCE LAST CIRC	BHT
MDT-GR (TOTAL : 26, 5 tight, 21 Lost Seals, No samples collected)	3400	3812	Run 1	26:40 hrs	132°C
CMR	3375	3917	Run 1	36:45 hrs	135°C
MSCT-GR (TOTAL : 26 Cores cut, 11 good, 3 partial,12 missing, 53.8% recovery)	3158m	3865m	Run 1	11:45 hrs	137°C
CSI CHECKSHOT	600m	3903m	Run 1	24:15 hrs	138°C

(h) MDT Pressure Data

An MDT pressure survey was conducted at the Callister-1 location as part of the Suite 2 Logging at Total Depth. A total of 26 pre-tests were attempted of which 5 were valid but tight, 21 were lost seals. No samples were collected. The MDT Pressure Survey data are presented in SECTION 3.2.4: MDT PRESSURE SURVEY RESULTS

(i) Hole Deviation

Callister-1 was drilled as a vertical hole. MWD survey data are presented in SECTION 15: DEVIATION SURVEYS.

At the Total Depth of 3914mRT (D), the estimated displacement was 36m towards 286.7°T direction. At total depth it is estimated that the TVD would be 3913.2m.

(j) Velocity Surveys

A Velocity Survey (checkshot) was conducted at approximately 50m intervals in the interval 3903m to loss of signal at 600m. Prior to the Velocity Survey a thorough visual check of the sea around rig perimeter was done to ensure that no whales were sighted in the proximity of the Callister-1 location.

(k) Casing & Cementing Summary

The following Table-3 summarises casing sizes, depths and cementing details for Callister-1. Casing and Cementing Reports for each casing run are detailed in SECTION 11: CASING & CEMENTING SUMMARY.

TABLE 3

HOLE SIZE	DEPTH	CASING SIZE	CASING DEPTH	JOINTS	CASING TYPE	CEMENT
914mm (36”)	192m	762mm (30”)	192m	3	460 kg/m X56	1086 sacks ABC class "G" cement of total volume 230 bbl, 2% BWOC, 2% CaCl2, mixed to a slurry weight of 1.9sg.
445mm (17.5")	787.5m	340mm (13.375")	778m	46	101kg/m L80 BTC	Lead: Class "G" cement of total volume 65m3, mixed to a slurry weight of 1.5sg. Tail: Class "G" cement of total volume 12m3, mixed to a slurry weight of 1.9sg.
311mm (12.25”)	2550m	244mm (9.625”)	2538m	192	70 kg/m L80	Lead: Class "G" cement of total volume 67m3, mixed to a slurry weight of 1.5sg. Tail: Class "G" cement of total volume 54m3, mixed to a slurry weight of 1.9sg.

SECTION 2: LITHOLOGICAL DESCRIPTIONS

SECTION 2.1: CUTTINGS DESCRIPTIONS

2.1 CALLISTER-1 - LITHOLOGICAL DESCRIPTIONS

(Depths are referenced to Drillers' depth)

Depth From	Depth To	Lithology %	Description
787	790	100	Mostly cement, with rare very coarse quartz grains and forams. Inferred to be 100% MARL
790	795	15 85	CEMENT MARL: Light grey to light greenish grey. Micritic, very argillaceous, very soft to dispersive, very sticky, occasionally firm. Amorphous, occasionally sub-blocky.
795	800	5 95	CEMENT MARL: Light grey to light greenish grey. Micritic, very argillaceous, very soft to dispersive, very sticky, occasionally firm. Amorphous, occasionally sub-blocky. Traces of very coarse quartz fragments, subangular to angular.
800	805	100	MARL: Very light grey to light greenish grey, very argillaceous, dispersive to very soft, traces of firm, amorphous, traces of subblocky.
805	810	100	MARL: Very light grey to light greenish grey, very argillaceous, dispersive to very soft, traces of firm, amorphous, traces of subblocky.
810	815	100	MARL: Very light grey to light greenish grey, very argillaceous, dispersive to very soft, traces of firm, amorphous, traces of subblocky.
815	820	100	MARL: Very light grey to light greenish grey, very argillaceous, dispersive to very soft, traces of firm, amorphous, traces of subblocky.
820	825	100	MARL: Very light grey to light greenish grey, very argillaceous, dispersive to very soft, traces of firm, amorphous, traces of subblocky,
825	830	70 30	CALCAREOUS CLAYSTONE: Light olive grey to greenish grey, grading to a MARL in part, traces of forams, moderately hard to very hard, subblocky, minor amorphous CALCARENITE: Light grey to light olive grey, traces of forams, moderately hard, friable in part, subblocky,
830	835	55 40 5	CALCAREOUS CLAYSTONE: Light olive grey to greenish grey, grading to a MARL in part, traces of forams, moderately hard to very hard, subblocky, minor amorphous CALCARENITE: Light grey to light olive grey, moderately hard, friable in part, subblocky, traces of forams. CALCILUTITE: Light grey to greenish grey, common silt grains, moderately soft to firm, subblocky

Depth From	Depth To	Lithology %	Description
835	840	55 40 5	CALCAREOUS CLAYSTONE: Light olive grey to greenish grey, grading to a MARL in part, traces of forams, moderately hard to very hard, subblocky, minor amorphous CALCARENITE: Light grey to light olive grey, moderately hard, friable in part, subblocky, traces of forams. CALCILUTITE: Light grey to greenish grey, common silt grains, moderately soft to firm, subblocky
840	845	80 20	CALCAREOUS CLAYSTONE: Light olive grey to greenish grey, grading to a MARL in part, traces of forams, moderately hard to very hard, subblocky, minor amorphous CALCARENITE: Light grey to light olive grey, traces of forams, moderately hard, friable in part, subblocky,
845	850	80 20	CALCAREOUS CLAYSTONE: Light olive grey to greenish grey, grading to a MARL in part, traces of forams, moderately hard to very hard, subblocky, minor amorphous CALCARENITE: Light grey to light olive grey, traces of forams, moderately hard, friable in part, subblocky,
850	855	100	SANDSTONE: Translucent to transparent loose quartz grains, fine to medium grain size, occasionally coarse, moderately to poorly sorted, subrounded to rounded, commonly subangular, common pyrite overgrowths, traces of disseminated pyrite, fair inferred porosity, no shows.
855	860	100	SANDSTONE: Translucent to transparent loose quartz grains, fine to medium grain size, occasionally coarse, moderately to poorly sorted, subrounded to rounded, commonly subangular, common pyrite overgrowths, traces of disseminated pyrite, fair inferred porosity, no shows.
860	865	100	SANDSTONE: Translucent to transparent loose quartz grains, traces of yellowish brown aggregates, fine to medium grain size, common light grey coarse grains, moderately to poorly sorted, subrounded to rounded, commonly subangular, non calcareous, minor pyrite overgrowths, very hard, fair inferred porosity, no shows.
865	870	100	SANDSTONE: Translucent to transparent to light grey loose quartz grains, fine to medium grain size, commonly coarse to very coarse, poorly sorted, subangular to subrounded, minor pyrite overgrowths, traces of disseminated pyrite, common Marl contamination, fair inferred porosity, no shows.
870	875	100	SANDSTONE: Translucent to transparent to light grey loose quartz grains, fine to medium grain size, commonly coarse to very coarse, moderately sorted, subangular to subrounded, minor pyrite overgrowths, traces of disseminated pyrite, fair inferred porosity, no shows.

Depth From	Depth To	Lithology %	Description
875	880	100	SANDSTONE: Translucent to transparent loose clean quartz grains, fine grain size, common coarse grains, moderately well sorted, subrounded to rounded, traces of disseminated pyrite, fair to poor inferred porosity, no shows.
880	885	100	SANDSTONE: Translucent to transparent loose clean quartz grains, fine grain size, common coarse grains, moderately well sorted, subrounded to rounded, traces of disseminated pyrite, fair to poor inferred porosity, no shows.
885	890	100	SANDSTONE: Translucent to transparent loose clean quartz grains, fine grain size, common coarse grains, well sorted, subrounded to rounded, traces of disseminated pyrite, fair to poor inferred porosity, no shows.
890	895	100	SANDSTONE: Very light grey, commonly loose clean quartz grains, fine to medium grains, trace very coarse grains, moderate sorted, subrounded to subangular, trace white calcareous matrix, argillaceous in-part, trace to 10% of disseminated pyrite, trace glauconite, fair to poor inferred porosity, no shows.
895	900	100	SANDSTONE: Very light grey, commonly loose clean quartz grains, fine to medium grains, trace very coarse grains, subrounded to subangular, moderate sorted, trace white calcareous matrix, argillaceous in-part, trace to 10% of disseminated pyrite, trace glauconite, fair to poor inferred porosity, no shows.
900	905	90	SANDSTONE: Very light grey, commonly loose clean quartz grains, fine to medium grains, trace very coarse grains, subrounded to subangular, moderate sorted, trace white calcareous matrix, argillaceous in-part, trace of disseminated pyrite, trace glauconite, fair to poor inferred porosity, no shows.
		10	SILTSTONE: Light brownish grey to light olive grey, abundant argillaceous, grading to CLAYSTONE, slightly calcareous, trace micro-pyrite, soft, sticky in-part, subblocky
905	910	90	SANDSTONE: Very light grey, commonly loose clean quartz grains, fine to medium grains, trace very coarse grains, subrounded to subangular, moderately sorted, trace white calcareous matrix, argillaceous in-part, trace of disseminated pyrite, trace glauconite, fair to poor inferred porosity, no shows.
		10	SILTSTONE: Light brownish grey to light olive grey, abundant argillaceous, grading to CLAYSTONE, slightly calcareous, trace micro-pyrite, soft, sticky in-part, subblocky

Depth From	Depth To	Lithology %	Description
910	915	85	SANDSTONE: Transparent, commonly loose clean quartz grains, fine to medium grains, trace very coarse grains, subrounded to subangular, moderate sorted, trace white calcareous matrix, argillaceous in-part, trace of disseminated pyrite, trace glauconite, fair to poor inferred porosity, no shows.
		15	SILTSTONE: Light brownish grey to light olive grey, abundant argillaceous, grading to CLAYSTONE, slightly calcareous, trace micro-pyrite, soft, sticky in-part, subblocky
915	920	100	SANDSTONE: Transparent, loose clean quartz grains, fine to medium grains, moderately sorted, subrounded to rounded, argillaceous in-part, trace disseminated pyrite, trace glauconite, well inferred porosity, no shows.
920	925	100	SANDSTONE: Transparent, loose clean quartz grains, fine to medium grains, moderately sorted, subrounded to rounded, argillaceous in-part, trace disseminated pyrite, trace glauconite, well inferred porosity, no shows.
925	930	80	SANDSTONE: Transparent, loose clean quartz grains, fine to medium grains, moderately sorted, subrounded to rounded, argillaceous in-part, trace disseminated pyrite, trace glauconite, well inferred porosity, no shows.
		20	CLAYSTONE: Light brownish grey to brownish grey, non calcareous, soft, sticky, dispersive in-part, sub-blocky
930	935	50	SANDSTONE: Transparent, loose clean quartz grains, fine to medium grains, moderately sorted, subrounded to rounded, argillaceous in-part, trace disseminated pyrite, trace glauconite, well inferred porosity, no shows.
		50	CLAYSTONE: Light brownish grey to brownish grey, non calcareous, soft, sticky, dispersive in-part, sub-blocky
935	940	70	SANDSTONE: Transparent, loose clean quartz grains, fine to medium grains, moderately sorted, subrounded to rounded, argillaceous in-part, trace disseminated pyrite, trace glauconite, well inferred porosity, no shows.
		30	CLAYSTONE: Light brownish grey to brownish grey, non calcareous, soft, sticky, dispersive in-part, sub-blocky
940	945	80	SANDSTONE: Transparent, loose clean quartz grains, fine to medium grains, moderately sorted, subrounded to rounded, argillaceous in-part, trace disseminated pyrite, trace glauconite, well inferred porosity, no shows.
		20	CLAYSTONE: Light brownish grey to brownish grey, non calcareous, soft, sticky, dispersive in-part, sub-blocky

Depth From	Depth To	Lithology %	Description
945	950	90	SANDSTONE: Transparent, loose clean quartz grains, fine to medium grains, moderately sorted, subrounded to rounded, argillaceous in-part, trace disseminated pyrite, trace glauconite, well inferred porosity, no shows.
		10	CLAYSTONE: Light brownish grey to brownish grey, non calcareous, soft, sticky, dispersive in-part, sub-blocky
950	955	80	SANDSTONE: Transparent, loose clean quartz grains, fine to medium grains, moderately sorted, subrounded to rounded, argillaceous in-part, trace disseminated pyrite, trace glauconite, well inferred porosity, no shows.
		20	CLAYSTONE: Light brownish grey to brownish grey, non calcareous, soft, sticky, dispersive in-part, sub-blocky
955	960	90	SANDSTONE: Transparent, loose clean quartz grains, fine to medium grains, moderately sorted, subrounded to rounded, argillaceous in-part, trace disseminated pyrite, trace glauconite, well inferred porosity, no shows.
		10	CLAYSTONE: Light brownish grey to brownish grey, non calcareous, soft, sticky, dispersive in-part, subblocky
960	965	100	SANDSTONE: Transparent, loose clean quartz grains, fine to medium grains, moderately sorted, subrounded to rounded, argillaceous in-part, trace disseminated pyrite, trace glauconite, well inferred porosity, no shows.
965	970	90	SANDSTONE: Transparent, loose clean quartz grains, fine to medium grains, moderately sorted, subrounded to rounded, argillaceous in-part, trace disseminated pyrite, trace glauconite, fair inferred porosity, no shows.
		10	CLAYSTONE: Light brownish grey to brownish grey, non calcareous, grading to SILTSTONE in part, soft, sticky, dispersive in-part, sub-blocky
975	980	85	SANDSTONE: Clear, translucent to transparent loose clean quartz grains, very fine to coarse grains, poorly sorted, subrounded to rounded, argillaceous in-part, trace disseminated pyrite, poor inferred porosity, no shows.
		15	CLAYSTONE: Light brownish grey to brownish grey, non calcareous, grading to SILTSTONE in part, soft, sticky, dispersive in-part, sub-blocky
980	985	90	SANDSTONE: Clear, translucent to transparent loose clean quartz grains, very fine to coarse grains, poorly sorted, subrounded to rounded, argillaceous in-part, trace disseminated pyrite, poor inferred porosity, no shows.
		10	CLAYSTONE: Light brownish grey to brownish grey, non calcareous, grading to SILTSTONE in part, soft, sticky, dispersive in-part, sub-blocky

Depth From	Depth To	Lithology %	Description
985	990	50	SANDSTONE: Clear, translucent to transparent loose clean quartz grains, very fine to coarse grains, poorly sorted, subrounded to rounded, argillaceous in-part, trace disseminated pyrite, poor inferred porosity, no shows.
		50	CLAYSTONE: Light brownish grey to brownish grey, non calcareous, grading to SILTSTONE in part, soft, sticky, dispersive in-part, sub-blocky
990	995	70	SANDSTONE: Clear-translucent, very light grey, loose quartz grains, very fine to medium grains, trace coarse, moderate well sorted, subrounded to subangular, trace weak cement, trace slightly argillaceous matrix, trace disseminated pyrite, pyritic, poor inferred porosity, no shows.
		30	CLAYSTONE: Light brownish grey to brownish grey, grading to SILTSTONE, trace disseminated micro-pyrite, soft, dispersive in-part, subblocky, slightly streaky, amorphous, homogeneous
995	1000	60	SANDSTONE: Clear-translucent, very light grey, loose quartz grains, very fine to medium grains, trace coarse, moderate well sorted, subrounded to subangular, trace weak cement, trace slightly argillaceous matrix, trace disseminated pyrite, pyritic, poor inferred porosity, no shows.
		40	CLAYSTONE: Light brownish grey to brownish grey, grading to SILTSTONE, trace disseminated micro-pyrite, soft, dispersive in-part, subblocky, slightly streaky, amorphous, homogeneous
1000	1005	60	SANDSTONE: Clear-translucent, very light grey, trace white, loose quartz grains, fine to coarse grains, trace very coarse, poorly sorted, subrounded to subangular, trace weak cement, trace slightly argillaceous matrix, trace disseminated pyrite, pyritic, quartz overgrowth, poor inferred porosity, no shows.
		40	CLAYSTONE: Light brownish grey to brownish grey, grading to SILTSTONE, trace disseminated micro-pyrite, soft, dispersive in-part, slightly streaky, amorphous, subblocky, homogeneous
1005	1010	20	SANDSTONE: Clear-translucent, very light grey, trace white, loose quartz grains, fine to coarse grains, trace very coarse, poorly sorted, subrounded to subangular, trace weak cement, trace slightly argillaceous matrix, trace disseminated pyrite, pyritic, quartz overgrowth, poor inferred porosity, no shows.
		80	CLAYSTONE: Light brownish grey to brownish grey, grading to SILTSTONE, trace disseminated micro-pyrite, soft, dispersive in-part, slightly streaky, amorphous, subblocky, homogeneous

Depth From	Depth To	Lithology %	Description
1010	1015	10	SANDSTONE: Clear-translucent, loose quartz grains, coarse to very coarse, moderate well sorted, subrounded to subangular, trace disseminated pyrite, pyritic, quartz overgrowth, poor inferred porosity, no shows.
		90	CLAYSTONE: Light brownish grey to brownish grey, grading to SILTSTONE, trace disseminated micro-pyrite, soft, dispersive in-part, slightly streaky, amorphous, subblocky, homogeneous
1015	1020	100	CLAYSTONE: Light brownish grey to pale yellowish brown, grading to SILTSTONE, trace pyrite, very soft to soft, streaky, amorphous, homogeneous, subblocky
1020	1025	100	CLAYSTONE: Light brownish grey to pale yellowish brown, grading to SILTSTONE, trace pyrite, very soft to soft, streaky, amorphous, homogeneous, subblocky
1025	1030	100	CLAYSTONE: Light brownish grey to pale yellowish brown, grading to SILTSTONE, trace pyrite, very soft to soft, streaky, amorphous, homogeneous, subblocky
1030	1035	100	CLAYSTONE: Light brownish grey to pale yellowish brown, grading to SILTSTONE, trace pyrite, very soft to soft, streaky, amorphous, homogeneous, subblocky
1035	1040	100	CLAYSTONE: moderate brown to pale yellowish brown, trace pyrite, very soft to soft, streaky, amorphous, homogeneous, subblocky
1040	1045	100	CLAYSTONE: Dark brownish grey to pale yellowish brown, trace pyrite, very soft to soft, streaky, amorphous, homogeneous, subblocky
1045	1050	100	CLAYSTONE: Dark brownish grey to pale yellowish brown, trace pyrite, very soft to soft, streaky, amorphous, homogeneous, subblocky
1050	1055	100	CLAYSTONE: Dark brownish grey to pale yellowish brown, trace pyrite, very soft to soft, streaky, amorphous, homogeneous, subblocky
1055	1060	100	CLAYSTONE: Dark brownish grey to pale yellowish brown, trace pyrite, very soft to soft, streaky, amorphous, homogeneous, subblocky
1060	1065	100	CLAYSTONE: Dark brownish grey to pale yellowish brown, trace pyrite, very soft to soft, streaky, amorphous, homogeneous, subblocky

Depth From	Depth To	Lithology %	Description
1065	1070	100	CLAYSTONE: Dark brownish grey to dark yellowish brown, grading to SILTSTONE in-part, trace pyrite, very soft to soft, streaky, amorphous, subblocky, homogeneous
1070	1075	100	CLAYSTONE: moderate brown to dark yellowish brown, grading to SILTSTONE in-part, trace pyrite, very soft to soft, subblocky, streaky, amorphous, homogeneous
1075	1080	95	CLAYSTONE: moderate brown to dark yellowish brown, grading to SILTSTONE in-part, trace pyrite, very soft to soft, streaky, amorphous, subblocky, homogeneous
		5	SANDSTONE: Clear-translucent, loose quartz grains, fine to coarse, poorly sorted, angular to subangular, trace glauconite, quartz overgrowth, poor inferred porosity, no shows.
1080	1085	80	CLAYSTONE: moderate brown to dark yellowish brown, grading to SILTSTONE in-part, trace pyrite, very soft to soft, subblocky, streaky, amorphous, homogeneous
		20	SANDSTONE: Clear-translucent, loose quartz grains, fine to coarse, poorly sorted, angular to subangular, trace glauconite, quartz overgrowth, poor inferred porosity, no shows.
1085	1090	40	CLAYSTONE: moderate brown to dark yellowish brown, grading to SILTSTONE in-part, trace pyrite, very soft to soft, subblocky, streaky, amorphous, homogeneous
		60	SANDSTONE: Clear-translucent, loose quartz grains, fine to coarse, poorly sorted, angular to subangular, trace glauconite, quartz overgrowth, poor inferred porosity, no shows.
1090	1095	50	CLAYSTONE: moderate brown to dark yellowish brown, grading to SILTSTONE in-part, trace pyrite, very soft to soft, subblocky, streaky, amorphous, homogeneous
		50	SANDSTONE: Clear-translucent, white, yellowish brown, loose quartz grains, medium to coarse, localised very coarse, moderate well sorted, subangular to subrounded, sub spherical, trace glauconite, trace pyrite, quartz overgrowth, fair inferred porosity, no shows.
1095	1100	60	CLAYSTONE: moderate brown to dark yellowish brown, grading to SILTSTONE in-part, trace pyrite, very soft to soft, subblocky, streaky, amorphous, homogeneous
		40	SANDSTONE: Clear-translucent, white, yellowish brown, loose quartz grains, fine to medium, coarse to very coarse in part, poorly sorted, subangular to subrounded, moderately spherical, no cement, slightly argillaceous matrix, trace glauconite, trace pyrite, quartz overgrowth, trace black inclusion in-part, fair inferred porosity, no shows.

Depth From	Depth To	Lithology %	Description
1100	1105	80	CLAYSTONE: moderate brown to dark yellowish brown, grading to SILTSTONE in-part, trace pyrite, very soft to soft, subblocky, streaky, amorphous, homogeneous
		20	SANDSTONE: Clear-translucent, white, yellowish brown, loose quartz grains, fine to medium, coarse to very coarse in part, poorly sorted, subangular to subrounded, moderately spherical, no cement, slightly silty argillaceous matrix, trace glauconite, trace pyrite, quartz overgrowth, trace black inclusion in-part, fair inferred porosity, no shows.
1105	1110	70	CLAYSTONE: moderate brown to dark yellowish brown, grading to SILTSTONE in-part, trace pyrite, very soft to soft, subblocky, streaky, amorphous, homogeneous
		30	SANDSTONE: Clear-translucent, white, yellowish brown, loose quartz grains, fine to medium, coarse to very coarse in part, poorly sorted, subangular to subrounded, moderately spherical, no cement, slightly silty argillaceous matrix, trace glauconite, trace pyrite, quartz overgrowth, trace black inclusion in-part, fair inferred porosity, no shows.
1110	1115	70	CLAYSTONE: moderate brown to dark yellowish brown, grading to SILTSTONE in-part, trace pyrite, very soft to soft, subblocky, streaky, amorphous, homogeneous
		30	SANDSTONE: Clear-translucent, white, yellowish brown, loose quartz grains, fine to medium, coarse to very coarse in part, poorly sorted, subangular to subrounded, moderately spherical, no cement, slightly silty argillaceous matrix, trace glauconite, trace pyrite, quartz overgrowth, trace black inclusion in-part, fair inferred porosity, no shows.
1115	1120	90	CLAYSTONE: moderate brown to dark yellowish brown, grading to SILTSTONE in-part, trace pyrite, very soft to soft, subblocky, streaky, amorphous, homogeneous
		10	SANDSTONE: Clear-translucent, white, yellowish brown, loose quartz grains, fine to medium, coarse to very coarse in part, poorly sorted, subangular to subrounded, moderately spherical, no cement, slightly silty argillaceous matrix, trace glauconite, trace pyrite, quartz overgrowth, trace black inclusion in-part, fair inferred porosity, no shows.
1120	1125	90	CLAYSTONE: moderate brown to dark yellowish brown, grading to SILTSTONE in-part, trace pyrite, very soft to soft, subblocky, streaky, amorphous, homogeneous
		10	SANDSTONE: Clear-translucent, white, yellowish brown, loose quartz grains, fine to medium, coarse to very coarse in part, poorly sorted, subangular to subrounded, moderately spherical, no cement, slightly silty argillaceous matrix, trace glauconite, trace pyrite, quartz overgrowth, trace black inclusion in-part, fair inferred porosity, no shows.

Depth From	Depth To	Lithology %	Description
1125	1130	90	CLAYSTONE: moderate brown to dark yellowish brown, grading to SILTSTONE in-part, trace pyrite, very soft to soft, subblocky, streaky, amorphous, homogeneous
		10	SANDSTONE: Clear-translucent, white, yellowish brown, loose quartz grains, fine to medium, coarse to very coarse in part, poorly sorted, subangular to subrounded, moderately spherical, no cement, slightly silty argillaceous matrix, trace glauconite, trace pyrite, quartz overgrowth, trace black inclusion in-part, fair inferred porosity, no shows.
1130	1135	80	CLAYSTONE: moderate brown to dark yellowish brown, grading to SILTSTONE in-part, trace pyrite, very soft to soft, subblocky, streaky, amorphous, homogeneous
		20	SANDSTONE: Clear-translucent, white, yellowish brown, loose quartz grains, fine to medium, coarse to very coarse in part, poorly sorted, subangular to subrounded, moderately spherical, no cement, slightly silty argillaceous matrix, trace glauconite, trace pyrite, quartz overgrowth, trace black inclusion in-part, fair inferred porosity, no shows.
1135	1140	40	CLAYSTONE: moderate brown to dark yellowish brown, grading to SILTSTONE in-part, trace pyrite, very soft to soft, subblocky, plastic in part, streaky, amorphous, homogeneous
		60	SANDSTONE: Clear-translucent, white, yellowish brown, loose quartz grains, fine to medium, coarse to very coarse in part, poorly sorted, subangular to subrounded, moderately spherical, no cement, slightly silty argillaceous matrix, trace glauconite, trace pyrite, quartz overgrowth, trace black inclusion in-part, fair inferred porosity, no shows.
1140	1145	40	CLAYSTONE: moderate brown to dark yellowish brown, grading to SILTSTONE in-part, trace pyrite, very soft to soft, subblocky, plastic in part, streaky, amorphous, homogeneous
		60	SANDSTONE: Clear-translucent, white, yellowish brown, loose quartz grains, fine to medium, coarse to very coarse in part, poorly sorted, subangular to subrounded, moderately spherical, no cement, slightly silty argillaceous matrix, trace glauconite, trace pyrite, quartz overgrowth, trace black inclusion in-part, fair inferred porosity, no shows.
1145	1150	10	CLAYSTONE: moderate brown to dark yellowish brown, grading to SILTSTONE in-part, trace pyrite, very soft to soft, subblocky, plastic in part, streaky, amorphous, homogeneous
		90	SANDSTONE: Clear-translucent, white, yellowish brown, loose quartz grains, fine to medium, coarse to very coarse in part, moderately sorted, subangular to subrounded, moderately spherical, no cement, slightly silty argillaceous matrix, trace glauconite, trace pyrite, quartz overgrowth, trace black inclusion in-part, fair inferred porosity, no shows.

Depth From	Depth To	Lithology %	Description
1150	1155	60	CLAYSTONE: moderate brown to dark yellowish brown, grading to SILTSTONE in-part, trace pyrite, very soft to soft, subblocky, plastic in part, streaky, amorphous, homogeneous
		40	SANDSTONE: Clear-translucent, white, yellowish brown, loose quartz grains, fine to medium, coarse to very coarse in part, moderately sorted,, subangular to subrounded, moderately spherical, no cement, slightly silty argillaceous matrix, trace glauconite, trace pyrite, quartz overgrowth, trace black inclusion in-part, fair inferred porosity, no shows.
1155	1160	50	CLAYSTONE: moderate brown to dark yellowish brown, grading to SILTSTONE in-part, trace pyrite, very soft to soft, subblocky, plastic in part, streaky, amorphous, homogeneous
		50	SANDSTONE: Clear-translucent, white, yellowish brown, loose quartz grains, fine to medium, coarse to very coarse in part, moderately sorted, subangular to subrounded, moderately spherical, no cement, slightly silty argillaceous matrix, trace glauconite, trace pyrite, quartz overgrowth, trace black inclusion in-part, fair inferred porosity, no shows.
1160	1165	30	CLAYSTONE: moderate brown to dark brown, grading to SILTSTONE in-part, trace pyrite, very soft to soft, subblocky, plastic in part, streaky, amorphous, homogeneous
		70	SANDSTONE: Clear-translucent, white, yellowish brown, loose quartz grains, fine to medium, coarse to very coarse in part, moderately sorted, subangular to subrounded, moderately spherical, no cement, slightly silty argillaceous matrix, trace glauconite, trace pyrite, quartz overgrowth, trace black inclusion in-part, fair inferred porosity, no shows.
1165	1170	50	CLAYSTONE: moderate brown to dark brown, grading to SILTSTONE in-part, trace pyrite, very soft to soft, subblocky, plastic in part, streaky, amorphous, homogeneous
		50	SANDSTONE: Clear-translucent, white, yellowish brown, loose quartz grains, fine to medium, coarse to very coarse in part, moderately sorted, subangular to subrounded, moderately spherical, no cement, slightly silty argillaceous matrix, trace glauconite, trace pyrite, quartz overgrowth, trace black inclusion in-part, fair inferred porosity, no shows.
1170	1175	60	CLAYSTONE: moderate brown to dark brown, grading to SILTSTONE in-part, trace pyrite, very soft to soft, subblocky, plastic in part, streaky, amorphous, homogeneous
		40	SANDSTONE: Clear-translucent, white, yellowish brown, loose quartz grains, very fine to medium grain size, occasionally medium to coarse, poorly sorted, subangular to subrounded, moderately spherical, no cement, slightly silty argillaceous matrix, trace glauconite, trace pyrite, quartz overgrowth, trace black inclusion in-part, fair inferred porosity, no shows.

Depth From	Depth To	Lithology %	Description
1175	1180	30	CLAYSTONE: moderate brown to dark brown, grading to SILTSTONE in-part, trace pyrite, very soft to soft, subblocky, plastic in part, streaky, amorphous, homogeneous
		70	SANDSTONE: Clear-translucent, white, yellowish brown, loose quartz grains, very fine to medium grain size, occasionally medium to coarse, poorly sorted, subangular to subrounded, moderately spherical, no cement, slightly silty argillaceous matrix, trace glauconite, trace pyrite, quartz overgrowth, trace black inclusion in-part, fair inferred porosity, no shows.
1180	1185	50	CLAYSTONE: moderate brown to dark brown, grading to SILTSTONE in-part, trace pyrite, very soft to soft, subblocky, plastic in part, streaky, amorphous, homogeneous
		50	SANDSTONE: Clear-translucent, white, yellowish brown, loose quartz grains, very fine to medium grain size, occasionally medium to coarse, poorly sorted, subangular to subrounded, moderately spherical, no cement, slightly silty argillaceous matrix, trace glauconite, trace pyrite, quartz overgrowth, trace black inclusion in-part, fair inferred porosity, no shows.
1185	1190	60	CLAYSTONE: Brown to olive brown, grading to SILTSTONE in part, very soft to dispersive, minor black specks, amorphous, homogeneous
		40	SANDSTONE: Translucent to transparent, loose quartz grains, very fine to medium grain size, common coarse grains, poorly sorted, subrounded to rounded, occasionally subangular, no cement, argillaceous matrix, trace pyrite, trace mica, fair inferred porosity, no shows.
1190	1195	30	CLAYSTONE: Brown to olive brown, grading to SILTSTONE in part, very soft to dispersive, minor black specks, amorphous, homogeneous
		70	SANDSTONE: Translucent to transparent, loose quartz grains, very fine to medium grain size, common coarse grains, poorly sorted, subrounded to rounded, occasionally subangular, no cement, argillaceous matrix, trace pyrite, trace mica, fair inferred porosity, no shows.
1195	1200	30	CLAYSTONE: Brown to olive brown, grading to SILTSTONE in part, very soft to dispersive, minor black specks, amorphous, homogeneous
		70	SANDSTONE: Translucent to transparent, loose quartz grains, very fine to medium grain size, common coarse grains, poorly sorted, subrounded to rounded, occasionally subangular, no cement, argillaceous matrix, trace pyrite, trace mica, fair inferred porosity, no shows.

Depth From	Depth To	Lithology %	Description
1200	1205	50	CLAYSTONE: Brown to olive brown, grading to SILTSTONE in part, very soft to dispersive, minor black specks, amorphous, homogeneous
		50	SANDSTONE: Translucent to transparent, loose quartz grains, very fine to medium grain size, common coarse grains, poorly sorted, subrounded to rounded, occasionally subangular, no cement, argillaceous matrix, trace pyrite, trace mica, fair inferred porosity, no shows.
1205	1210	40	CLAYSTONE: Brown to olive brown, grading to SILTSTONE in part, very soft to dispersive, minor black specks, amorphous, homogeneous
		60	SANDSTONE: Translucent to transparent, loose quartz grains, very fine to medium grain size, common coarse grains, poorly sorted, subrounded to rounded, occasionally subangular, no cement, argillaceous matrix, trace pyrite, trace mica, fair inferred porosity, no shows.
1210	1215	40	CLAYSTONE: Brown to olive brown, grading to SILTSTONE in part, very soft to dispersive, minor black specks, amorphous, homogeneous
		60	SANDSTONE: Translucent to transparent, loose quartz grains, very fine to medium grain size, common coarse grains, poorly sorted, subrounded to rounded, occasionally subangular, no cement, argillaceous matrix, trace pyrite, trace mica, fair inferred porosity, no shows.
1215	1220	30	CLAYSTONE: Brown to olive brown, grading to SILTSTONE in part, very soft to dispersive, minor black specks, amorphous, homogeneous
		70	SANDSTONE: Translucent to transparent, loose quartz grains, very fine to medium grain size, common coarse grains, poorly sorted, subrounded to rounded, occasionally subangular, no cement, argillaceous matrix, trace pyrite, trace mica, fair inferred porosity, no shows.
1220	1225	20	CLAYSTONE: Brown to olive brown, grading to SILTSTONE in part, very soft to dispersive, minor black specks, amorphous, homogeneous
		80	SANDSTONE: Translucent to transparent, loose quartz grains, very fine to medium grain size, common coarse grains, poorly sorted, subrounded to rounded, occasionally subangular, no cement, argillaceous matrix, trace pyrite, trace mica, fair inferred porosity, no shows.

Depth From	Depth To	Lithology %	Description
1225	1230	40	CLAYSTONE: Brown to olive brown, grading to SILTSTONE in part, very soft to dispersive, minor black specks, amorphous, homogeneous
		60	SANDSTONE: Translucent to transparent, loose quartz grains, very fine to medium grain size, common coarse grains, poorly sorted, subrounded to rounded, occasionally subangular, trace pyrite cement, argillaceous matrix, trace pyrite, trace mica, fair inferred porosity, no shows.
1230	1235	50	CLAYSTONE: Brown to olive brown, grading to SILTSTONE in part, very soft to dispersive, minor black specks, amorphous, homogeneous
		50	SANDSTONE: Translucent to transparent, loose quartz grains, very fine to medium grain size, common coarse grains, poorly sorted, subrounded to rounded, occasionally subangular, trace pyrite cement, argillaceous matrix, trace pyrite, trace mica, fair inferred porosity, no shows.
1235	1240	40	CLAYSTONE: Olive grey to brown, non calcareous, silty in places, trace pyrite, trace mica, very soft to soft, amorphous, plastic in places, minor subblocky
		60	SANDSTONE: Translucent to transparent to light grey, occasionally yellow brown, loose quartz grains, fine to medium grains, minor coarse, moderately sorted, subrounded to rounded, minor subangular, minor pyrite cement, argillaceous matrix, trace pyrite overgrowths, trace mica, fair to poor inferred porosity, no shows.
1240	1245	60	CLAYSTONE: Olive grey to brown, non calcareous, silty in places, trace pyrite, trace mica, very soft to soft, plastic in places, amorphous, minor subblocky
		40	SANDSTONE: Translucent to transparent to light grey, occasionally yellow brown, loose quartz grains, predominantly fine, common medium grains, minor coarse, moderately sorted, subrounded to rounded, minor subangular, minor pyrite cement, argillaceous matrix, trace pyrite overgrowths, trace mica, fair to poor inferred porosity, no shows.
1245	1250	30	CLAYSTONE: Olive grey to brown, non calcareous, silty in places, trace pyrite, trace mica, very soft to soft, plastic in places, amorphous, minor subblocky
		70	SANDSTONE: Translucent to transparent to light grey, occasionally yellow brown, loose quartz grains, predominantly fine, common medium grains, minor coarse, moderately to poorly sorted, subrounded to rounded, minor subangular, minor pyrite cement, argillaceous matrix, trace pyrite overgrowths, trace mica, fair to poor inferred porosity, no shows.

Depth From	Depth To	Lithology %	Description
1250	1255	20	CLAYSTONE: Olive grey to brown, non calcareous, silty in places, trace pyrite, trace mica, very soft to soft, plastic in places, amorphous, minor subblocky
		80	SANDSTONE: Translucent to transparent to light grey, occasionally yellow brown, loose quartz grains, predominantly fine, commonly medium grains, minor coarse, moderately to poorly sorted, subrounded to rounded, minor subangular, minor pyrite cement, argillaceous matrix, trace pyrite overgrowths, trace mica, fair to poor inferred porosity, no shows.
1255	1260	20	CLAYSTONE: Olive grey to brown, non calcareous, silty in places, trace pyrite, trace mica, very soft to soft, plastic in places, amorphous, minor subblocky
		80	SANDSTONE: Translucent to transparent to light grey, occasionally yellow brown, loose quartz grains, predominantly fine to medium grains, minor coarse, moderately sorted, subrounded to rounded, minor subangular, minor pyrite cement, argillaceous matrix, trace pyrite overgrowths, trace mica, fair to poor inferred porosity, no shows.
1260	1265	20	CLAYSTONE: Olive grey to brown, non calcareous, silty in places, trace pyrite, trace mica, very soft to soft, plastic in places, amorphous, minor subblocky
		80	SANDSTONE: Translucent to transparent to light grey, occasionally yellow brown, loose quartz grains, predominantly fine to medium grains, minor coarse, moderately sorted, subrounded to rounded, minor subangular, minor pyrite cement, argillaceous matrix, trace pyrite overgrowths, trace mica, fair to poor inferred porosity, no shows.
1265	1270	45	CLAYSTONE: Olive grey to brown, non calcareous, silty in places, trace pyrite, trace mica, very soft to soft, plastic in places, amorphous, minor subblocky
		50	SANDSTONE: Translucent to transparent to light grey, occasionally yellow brown, loose quartz grains, predominantly fine to medium grains, common coarse to very coarse, moderately sorted, subrounded to rounded, minor subangular, minor pyrite cement, argillaceous matrix, trace pyrite overgrowths, trace mica, fair to poor inferred porosity, no shows.
1270	1275	50	CLAYSTONE: Olive grey to brown, non calcareous, silty in places, trace pyrite, trace mica, very soft to soft, plastic in places, amorphous, minor subblocky
		50	SANDSTONE: Translucent to transparent to light grey, occasionally yellow brown, loose quartz grains, predominantly fine to medium grains, common coarse to very coarse, moderately sorted, subrounded to rounded, minor subangular, minor pyrite cement, argillaceous matrix, trace pyrite overgrowths, trace mica, fair to poor inferred porosity, no shows.

Depth From	Depth To	Lithology %	Description
1275	1280	70	CLAYSTONE: Olive grey to brown, silty in places, grading to SILTSTONE in places, non calcareous, trace pyrite, trace mica, very soft to dispersive, amorphous
		30	SANDSTONE: Translucent to transparent to light grey, occasionally yellow brown, loose quartz grains, predominantly fine to medium grains, common coarse to very coarse, poorly sorted, subrounded to rounded, minor subangular, minor pyrite cement, argillaceous matrix, trace pyrite overgrowths, trace mica, fair to poor inferred porosity, no shows.
1280	1285	70	CLAYSTONE: Olive grey to brown, silty in places, grading to SILTSTONE in places, non calcareous, trace pyrite, trace mica, very soft to dispersive, amorphous
		30	SANDSTONE: Translucent to transparent to light grey, occasionally yellow brown, loose quartz grains, predominantly fine to medium grains, common coarse to very coarse, poorly sorted, subrounded to rounded, minor subangular, minor pyrite cement, argillaceous matrix, trace pyrite overgrowths, trace mica, fair to poor inferred porosity, no shows.
1285	1290	80	CLAYSTONE: Olive grey to brown, silty in places, grading to SILTSTONE in places, non calcareous, trace pyrite, trace mica, very soft to dispersive, amorphous
		20	SANDSTONE: Translucent to transparent to light grey, occasionally yellow brown, loose quartz grains, predominantly fine to medium grains, common coarse to very coarse, poorly sorted, subrounded to rounded, minor subangular, minor pyrite cement, argillaceous matrix, trace pyrite overgrowths, trace mica, fair to poor inferred porosity, no shows.
1290	1295	80	CLAYSTONE: Olive grey to brown, silty in places, grading to SILTSTONE in places, non calcareous, trace pyrite, trace mica, very soft to dispersive, amorphous
		20	SANDSTONE: Translucent to transparent to light grey, occasionally yellow brown, loose quartz grains, predominantly fine to medium grains, common coarse to very coarse, poorly sorted, subrounded to rounded, minor subangular, minor pyrite cement, argillaceous matrix, trace pyrite overgrowths, trace mica, fair to poor inferred porosity, no shows.
1295	1300	85	CLAYSTONE: Olive grey to brown, silty in places, grading to SILTSTONE in places, non calcareous, trace pyrite, trace mica, very soft to dispersive, amorphous
		15	SANDSTONE: Translucent to transparent to light grey, occasionally yellow brown, loose quartz grains, predominantly fine to medium grains, common coarse to very coarse, poorly sorted, subrounded to rounded, minor subangular, argillaceous matrix, trace mica, fair to poor inferred porosity, no shows.

Depth From	Depth To	Lithology %	Description
1300	1305	60	CLAYSTONE: Olive grey to brown, silty in places, grading to SILTSTONE in places, non calcareous, trace pyrite, trace mica, very soft to dispersive, amorphous
		40	SANDSTONE: Translucent to transparent to light grey, occasionally yellow brown, loose quartz grains, predominantly fine to medium grains, common coarse to very coarse, poorly sorted, subrounded to rounded, minor subangular, argillaceous matrix, trace mica, fair to poor inferred porosity, no shows.
1305	1310	40	CLAYSTONE: Olive grey to brown, silty in places, grading to SILTSTONE in places, non calcareous, trace pyrite, trace mica, very soft to dispersive, amorphous
		60	SANDSTONE: Translucent to transparent to light grey, occasionally yellow brown, loose quartz grains, predominantly fine to medium grains, common coarse to very coarse, poorly sorted, subrounded to rounded, minor subangular, argillaceous matrix, trace mica, fair to poor inferred porosity, no shows.
1310	1315	50	CLAYSTONE: Olive grey to brown, silty in places, grading to SILTSTONE in places, non calcareous, trace pyrite, trace mica, very soft to dispersive, amorphous
		50	SANDSTONE: Translucent to transparent to light grey, occasionally yellow brown, loose quartz grains, predominantly fine to medium grains, common coarse to very coarse, poorly sorted, subrounded to rounded, minor subangular, argillaceous matrix, trace mica, fair to poor inferred porosity, no shows.
1315	1320	20	CLAYSTONE: Olive grey to brown, silty in places, grading to SILTSTONE in places, non calcareous, trace pyrite, trace mica, very soft to dispersive, amorphous
		80	SANDSTONE: Translucent to transparent to light grey, occasionally yellow brown, loose quartz grains, predominantly fine to medium grains, common coarse to very coarse, poorly sorted, subrounded to rounded, minor subangular, argillaceous matrix, trace mica, fair to poor inferred porosity, no shows.
1320	1325	30	CLAYSTONE: Olive grey to brown, silty in places, grading to SILTSTONE in places, non calcareous, trace pyrite, trace mica, very soft to dispersive, amorphous
		70	SANDSTONE: Translucent to transparent to light grey, occasionally yellow brown, loose quartz grains, fine to predominantly medium grains, common coarse to very coarse, poorly sorted, subrounded to rounded, minor subangular, argillaceous matrix, trace mica, fair to poor inferred porosity, no shows.

Depth From	Depth To	Lithology %	Description
1325	1330	20	CLAYSTONE: Olive grey to brown, silty in places, grading to SILTSTONE in places, non calcareous, trace pyrite, trace mica, very soft to dispersive, amorphous
		80	SANDSTONE: Translucent to transparent to light grey, occasionally yellow brown, loose quartz grains, fine to predominantly medium grains, common coarse to very coarse, poorly sorted, subrounded to rounded, minor subangular, argillaceous matrix, trace mica, fair to poor inferred porosity, no shows.
1330	1335	40	CLAYSTONE: Olive grey to brown, silty in places, grading to SILTSTONE in places, non calcareous, trace pyrite, trace mica, very soft to dispersive, amorphous
		60	SANDSTONE: Translucent to transparent to light grey, occasionally yellow brown, loose quartz grains, fine to predominantly medium grains, common coarse to very coarse, poorly sorted, subrounded to rounded, minor subangular, argillaceous matrix, trace mica, fair to poor inferred porosity, no shows.
1335	1340	60	CLAYSTONE: Olive grey to brown, silty in places, grading to SILTSTONE in places, non calcareous, trace pyrite, trace mica, very soft to dispersive, amorphous
		40	SANDSTONE: Translucent to transparent to light grey, occasionally yellow brown, loose quartz grains, fine to predominantly medium grains, common coarse to very coarse, poorly sorted, subrounded to rounded, minor subangular, argillaceous matrix, trace mica, fair to poor inferred porosity, no shows.
1340	1345	70	CLAYSTONE: Olive grey to brown, silty in places, grading to SILTSTONE in places, non calcareous, trace pyrite, trace mica, very soft to dispersive, amorphous
		30	SANDSTONE: Translucent to transparent to light grey, occasionally yellow brown, loose quartz grains, fine to predominantly medium grains, common coarse to very coarse, poorly sorted, subrounded to rounded, minor subangular, argillaceous matrix, trace mica, fair to poor inferred porosity, no shows.
1345	1350	40	CLAYSTONE: Olive grey to brown, silty in places, grading to SILTSTONE in places, non calcareous, trace pyrite, trace mica, very soft to dispersive, amorphous
		60	SANDSTONE: Translucent to transparent to light grey, occasionally yellow brown, loose quartz grains, fine to predominantly medium grains, common coarse to very coarse, poorly sorted, subrounded to rounded, minor subangular, argillaceous matrix, trace mica, fair to poor inferred porosity, no shows.

Depth From	Depth To	Lithology %	Description
1350	1355	50	CLAYSTONE: Olive grey to brown, silty in places, grading to SILTSTONE in places, non calcareous, trace pyrite, trace mica, very soft to dispersive, amorphous
		50	SANDSTONE: Translucent to transparent to light grey, occasionally yellow brown, loose quartz grains, fine to predominantly medium grains, common coarse to very coarse, poorly sorted, subrounded to rounded, minor subangular, argillaceous matrix, trace mica, fair to poor inferred porosity, no shows.
1355	1360	40	CLAYSTONE: Olive grey to brown, silty in places, grading to SILTSTONE in places, non calcareous, trace pyrite, trace mica, very soft to dispersive, amorphous
		50	SANDSTONE: Translucent to transparent to light grey, occasionally yellow brown, loose quartz grains, fine to predominantly medium grains, common coarse to very coarse, poorly sorted, subrounded to rounded, minor subangular, argillaceous matrix, trace mica, fair to poor inferred porosity, no shows.
1360	1365	50	CLAYSTONE: Olive brown to brown, silty in places, grading to SILTSTONE in places, trace pyrite, trace mica, dispersive, soft to very soft, commonly subblocky, amorphous
		50	SANDSTONE: Translucent to transparent to light grey, loose quartz grains, predominantly fine to medium, minor coarse, moderately sorted, subrounded to rounded, minor subangular, minor pyrite cement, argillaceous matrix, trace pyrite, trace mica, trace pyrite overgrowths, poor to fair inferred porosity, no shows.
1365	1370	55	CLAYSTONE: Olive grey to brown, silty in places, grading to SILTSTONE in places, non calcareous, trace pyrite, trace mica, very soft to dispersive, amorphous
		45	SANDSTONE: Translucent to transparent to light grey, occasionally yellow brown, loose quartz grains, fine to predominantly medium grains, common coarse to very coarse, poorly sorted, subrounded to rounded, minor subangular, argillaceous matrix, trace mica, fair to poor inferred porosity, no shows.
1370	1375	30	CLAYSTONE: Olive grey to brown, silty in places, grading to SILTSTONE in places, non calcareous, trace pyrite, trace mica, very soft to dispersive, amorphous
		70	SANDSTONE: Translucent to transparent to light grey, occasionally yellow brown, loose quartz grains, fine to predominantly medium grains, common coarse to very coarse, poorly sorted, subrounded to rounded, minor subangular, argillaceous matrix, trace mica, fair to poor inferred porosity, no shows.

Depth From	Depth To	Lithology %	Description
1375	1380	30	CLAYSTONE: Olive brown to brown, silty in places, grading to SILTSTONE in places, non calcareous, trace pyrite, trace mica, very soft to dispersive, amorphous
		70	SANDSTONE: Translucent to transparent to light grey, occasionally yellow brown, loose quartz grains, fine to predominantly medium grains, common coarse to very coarse, poorly sorted, subrounded to rounded, minor subangular, argillaceous matrix, trace mica, fair to poor inferred porosity, no shows.
1380	1385	20	CLAYSTONE: Olive brown to brown, silty in places, grading to SILTSTONE in places, non calcareous, trace pyrite, trace mica, very soft to dispersive, amorphous
		80	SANDSTONE: Translucent to transparent to light grey, occasionally yellow brown, loose quartz grains, fine to predominantly medium grains, minor coarse, poorly sorted, subrounded to rounded, minor subangular, argillaceous matrix, trace mica, fair to poor inferred porosity, no shows.
1385	1390	40	CLAYSTONE: Olive brown to brown, silty in places, grading to SILTSTONE in places, non calcareous, trace pyrite, trace mica, very soft to dispersive, amorphous
		60	SANDSTONE: Translucent to transparent to light grey, occasionally yellow brown, loose quartz grains, fine to predominantly medium grains, minor coarse, moderately sorted, subrounded to rounded, minor subangular, argillaceous matrix, trace mica, fair to poor inferred porosity, no shows.
1390	1395	20	CLAYSTONE: Olive brown to brown, silty in places, grading to SILTSTONE in places, non calcareous, trace pyrite, trace mica, very soft to dispersive, amorphous
		80	SANDSTONE: Translucent to transparent to light grey, occasionally yellow brown, loose quartz grains, fine to predominantly medium grains, minor coarse, moderately sorted, subrounded to rounded, minor subangular, argillaceous matrix, trace mica, fair to poor inferred porosity, no shows.
1395	1400	20	CLAYSTONE: Olive brown to brown, silty in places, grading to SILTSTONE in places, non calcareous, trace pyrite, trace mica, very soft to dispersive, amorphous
		80	SANDSTONE: Translucent to transparent to light grey, occasionally yellow brown, loose quartz grains, fine to predominantly medium grains, minor coarse, moderately sorted, subrounded to rounded, minor subangular, argillaceous matrix, trace mica, fair to poor inferred porosity, no shows.

Depth From	Depth To	Lithology %	Description
1400	1405	40	CLAYSTONE: Olive brown to brown, silty in places, grading to SILTSTONE in places, non calcareous, trace pyrite, trace mica, very soft to dispersive, amorphous
		60	SANDSTONE: Translucent to transparent to light grey, occasionally yellow brown, loose quartz grains, fine to predominantly medium grains, minor coarse, moderately sorted, subrounded to rounded, minor subangular, argillaceous matrix, trace mica, fair to poor inferred porosity, no shows.
1405	1410	60	CLAYSTONE: Olive brown to brown, silty in places, grading to SILTSTONE in places, non calcareous, trace pyrite, trace mica, very soft to dispersive, amorphous
		40	SANDSTONE: Translucent to transparent to light grey, occasionally yellow brown, loose quartz grains, fine to predominantly medium grains, minor coarse, moderately sorted, subrounded to rounded, minor subangular, argillaceous matrix, trace mica, fair to poor inferred porosity, no shows.
1410	1415	50	CLAYSTONE: greyish brown to brown, silty in places, grading to SILTSTONE in places, non calcareous, trace pyrite, trace mica, very soft to dispersive, amorphous
		50	SANDSTONE: Translucent to transparent to light grey, occasionally yellow brown, loose quartz grains, fine to predominantly medium grains, minor coarse, moderately sorted, subrounded to rounded, minor subangular, argillaceous matrix, trace mica, fair to poor inferred porosity, no shows.
1415	1420	60	CLAYSTONE: greyish brown to brown, silty in places, grading to SILTSTONE in places, non calcareous, trace pyrite, trace mica, very soft to dispersive, amorphous
		40	SANDSTONE: Translucent to transparent to light grey, occasionally yellow brown, loose quartz grains, fine to predominantly medium grains, minor coarse, moderately sorted, subrounded to rounded, minor subangular, argillaceous matrix, trace mica, fair to poor inferred porosity, no shows.
1420	1425	70	CLAYSTONE: greyish brown to brown, silty in places, grading to SILTSTONE in places, non calcareous, rare pyrite, trace mica, very soft to dispersive, amorphous
		30	SANDSTONE: Translucent to transparent to light grey, occasionally yellow brown, loose quartz grains, fine to predominantly medium grains, minor coarse, moderately sorted, subrounded to rounded, minor subangular, argillaceous matrix, trace mica, fair to poor inferred porosity, no shows.

Depth From	Depth To	Lithology %	Description
1425	1430	70	CLAYSTONE: greyish brown to brown, silty in places, grading to SILTSTONE in places, non calcareous, rare pyrite, trace mica, trace glauconite, very soft to dispersive, amorphous
		30	SANDSTONE: Translucent to transparent to very light grey, loose quartz grains, predominantly fine to coarse, minor very coarse, poorly sorted, subrounded to subangular, minor subangular, argillaceous matrix in-part, trace mica, poor to fair inferred porosity, no shows.
1430	1435	50	CLAYSTONE: Brown to dark brown, silty in places, grading to SILTSTONE in places, rare pyrite, trace glauconite, trace black inclusion, sticky, soft to very soft, commonly subblocky, amorphous
		50	SANDSTONE: Translucent to transparent to very light grey, loose quartz grains, predominantly fine to medium, minor coarse, moderately sorted, subrounded to subangular, argillaceous matrix in-part, poor to fair inferred porosity, no shows.
1435	1440	50	CLAYSTONE: Brown to dark brown, silty in places, grading to SILTSTONE in places, rare pyrite, trace glauconite, trace black inclusion, sticky, soft to very soft, commonly subblocky, amorphous
		50	SANDSTONE: Translucent to transparent to very light grey, loose quartz grains, predominantly fine to medium, minor coarse, moderately sorted, subrounded to subangular, argillaceous matrix in-part, poor to fair inferred porosity, no shows.
1440	1445	80	CLAYSTONE: Brown to dark brown, silty in places, grading to SILTSTONE in places, rare pyrite, trace glauconite, trace black inclusion, sticky, soft to very soft, commonly subblocky, amorphous
		20	SANDSTONE: Translucent to transparent to very light grey, loose quartz grains, predominantly fine to medium, minor coarse, moderately sorted, subrounded to subangular, argillaceous matrix in-part, poor to fair inferred porosity, no shows.
1445	1450	80	SILTSTONE: Brown to dark brown, argillaceous in part, grading to CLAYSTONE in places, rare pyrite, trace glauconite, trace black inclusion, soft to very soft, amorphous, sticky, commonly subblocky
		20	SANDSTONE: Translucent to transparent to very light grey, loose quartz grains, predominantly fine to medium, minor coarse, moderately sorted, subrounded to subangular, argillaceous matrix in-part, poor to fair inferred porosity, no shows.

Depth From	Depth To	Lithology %	Description
1450	1455	60	SILTSTONE: Brown to dark brown, argillaceous in part, grading to CLAYSTONE in places, rare pyrite, trace glauconite, trace black inclusion, soft to very soft, amorphous, sticky, commonly subblocky
		40	SANDSTONE: Translucent to transparent to very light grey, loose quartz grains, predominantly fine to medium, minor coarse, moderately sorted, subrounded to subangular, argillaceous matrix in-part, poor to fair inferred porosity, no shows.
1455	1460	70	SILTSTONE: Brown to dark brown, argillaceous in part, grading to CLAYSTONE in places, rare pyrite, trace glauconite, trace black inclusion, soft to very soft, amorphous, sticky, commonly subblocky , homogeneous
		30	SANDSTONE: Translucent to transparent to very light grey, loose quartz grains, predominantly fine to medium, minor coarse, moderately sorted, subrounded to subangular, argillaceous matrix in-part, poor to fair inferred porosity, no shows.
1460	1465	70	SILTSTONE: Brown to dark brown, argillaceous in part, grading to CLAYSTONE in places, rare pyrite, trace glauconite, trace black inclusion, soft to very soft, amorphous, sticky, commonly subblocky , homogeneous
		30	SANDSTONE: Translucent to transparent to very light grey, loose quartz grains, predominantly fine to medium, minor coarse, moderately sorted, subrounded to subangular, argillaceous matrix in-part, poor to fair inferred porosity, no shows.
1465	1470	80	SILTSTONE: Brown to dark brown, argillaceous in part, grading to CLAYSTONE in places, rare pyrite, trace glauconite, trace black inclusion, soft to very soft, amorphous, sticky, commonly subblocky , homogeneous
		20	SANDSTONE: Translucent to transparent to very light grey, loose quartz grains, predominantly fine to medium, minor coarse, moderately sorted, subrounded to subangular, argillaceous matrix in-part, poor to fair inferred porosity, no shows.
1470	1475	90	SILTSTONE: Brown to dark brown, argillaceous in part, grading to CLAYSTONE in places, rare pyrite, trace glauconite, trace black inclusion, soft to very soft, amorphous, sticky, commonly subblocky , homogeneous SANDSTONE:
		10	Transparent to very light grey, loose clean quartz, predominantly fine to medium, minor coarse, moderate sorted, subrounded to subangular, no cement, rare argillaceous matrix, trace pyrite, trace black inclusion, poor to fair inferred porosity, no shows.

Depth From	Depth To	Lithology %	Description
1475	1480	90 10	SILTSTONE: Brown to dark brown, argillaceous in part, grading to CLAYSTONE in places, rare pyrite, trace glauconite, trace black inclusion, soft to very soft, amorphous, sticky, commonly subblocky, homogeneous SANDSTONE: Transparent to very light grey, loose clean quartz, predominantly fine to medium, minor coarse, moderate sorted, subrounded to subangular, no cement, rare argillaceous matrix, trace pyrite, trace black inclusion, poor to fair inferred porosity, no shows.
1480	1485	90 10	SILTSTONE: Brown to dark brown, argillaceous in part, grading to CLAYSTONE in places, rare pyrite, trace glauconite, trace black inclusion, soft to very soft, amorphous, sticky, commonly subblocky, homogeneous SANDSTONE: Transparent to very light grey, loose clean quartz, predominantly fine to medium, minor coarse, moderate sorted, subrounded to subangular, no cement, rare argillaceous matrix, trace pyrite, trace black inclusion, poor to fair inferred porosity, no shows.
1485	1490	90 10	SILTSTONE: Brown to dark brown, argillaceous in part, grading to CLAYSTONE in places, rare pyrite, trace glauconite, trace black inclusion, soft to very soft, amorphous, sticky, commonly subblocky, homogeneous SANDSTONE: Transparent to very light grey, loose clean quartz, predominantly fine to medium, minor coarse, moderate sorted, subrounded to subangular, no cement, rare argillaceous matrix, trace pyrite, trace black inclusion, poor to fair inferred porosity, no shows.
1490	1495	90 10	SILTSTONE: Brown to dark brown, argillaceous in part, grading to CLAYSTONE in places, rare pyrite, trace glauconite, soft, sticky to dispersive, amorphous, subblocky, homogeneous SANDSTONE: Transparent to very light grey, loose clean quartz, predominantly fine to medium, minor coarse, moderate sorted, subrounded to subangular, no cement, rare argillaceous matrix, trace pyrite, trace black inclusion, poor to fair inferred porosity, no shows.
1495	1500	90 10	SILTSTONE: Brown to dark brown, argillaceous in part, grading to CLAYSTONE in places, rare pyrite, trace glauconite, soft, sticky to dispersive, amorphous, subblocky, homogeneous SANDSTONE: Transparent to very light grey, loose clean quartz, predominantly fine to medium, minor coarse, moderate sorted, subrounded to subangular, no cement, rare argillaceous matrix, trace pyrite, trace black inclusion, poor to fair inferred porosity, no shows.
1500	1505	100	SILTSTONE: Brown to dark brown, grading to CLAYSTONE in places, rare pyrite, trace glauconite, trace very fine quartz grains, sticky to dispersive, subblocky, amorphous, homogeneous, soft

Depth From	Depth To	Lithology %	Description
1505	1510	100	SILTSTONE: Dark grey to dark brown, very argillaceous, grading to CLAYSTONE in places, rare pyrite, trace glauconite, non calcareous, carbonaceous in part, sticky to dispersive, soft, amorphous, subblocky, homogeneous
1510	1515	100	SILTSTONE: Dark grey to dark brown, very argillaceous, grading to CLAYSTONE in places, rare pyrite, trace glauconite, non calcareous, carbonaceous in part, sticky to dispersive, soft, amorphous, subblocky, homogeneous
1515	1520	100	SILTSTONE: Dark grey to dark brown, very argillaceous, grading to CLAYSTONE in places, rare pyrite, trace glauconite, non calcareous, carbonaceous in part, sticky to dispersive, soft, amorphous, subblocky, homogeneous
1520	1525	90 10	SILTSTONE: Dark grey to dark brown, very argillaceous, grading to CLAYSTONE in places, rare pyrite, trace glauconite, non calcareous, carbonaceous in part, sticky to dispersive, soft, amorphous, subblocky, homogeneous SANDSTONE: Transparent to very light grey, loose clean quartz, predominantly fine to medium, minor coarse, moderate sorted, subrounded to subangular, no cement, rare argillaceous matrix, trace pyrite, trace black inclusion, poor to fair inferred porosity, no shows.
1525	1530	100	SILTSTONE: Dark grey to dark brown, very argillaceous, grading to CLAYSTONE in places, rare pyrite, trace glauconite, non calcareous, carbonaceous in part, sticky to dispersive, amorphous, subblocky, homogeneous, soft
1530	1535	100	SILTSTONE: Dark grey to dark brown, very argillaceous, grading to CLAYSTONE in places, rare pyrite, trace glauconite, non calcareous, carbonaceous in part, sticky to dispersive, soft, amorphous, subblocky, homogeneous
1535	1540	100	SILTSTONE: Dark grey to dark brown, very argillaceous, grading to CLAYSTONE in places, rare pyrite, trace glauconite, non calcareous, carbonaceous in part, sticky to dispersive, soft, amorphous, subblocky, homogeneous
1540	1545	100	SILTSTONE: Dark grey to dark brown, very argillaceous, grading to CLAYSTONE in places, rare pyrite, trace glauconite, non calcareous, carbonaceous in part, sticky to dispersive, soft, amorphous, subblocky, homogeneous
1545	1550	100	SILTSTONE: Dark grey to dark brown, very argillaceous, grading to CLAYSTONE in places, rare pyrite, trace glauconite, non calcareous, carbonaceous in part, sticky to dispersive, soft, amorphous, subblocky, homogeneous

Depth From	Depth To	Lithology %	Description
1550	1555	90 10	SILTSTONE: Dark grey to dark brown, very argillaceous, grading to CLAYSTONE in places, rare pyrite, trace glauconite, non calcareous, carbonaceous in part, sticky to dispersive, soft, amorphous, subblocky, homogeneous SANDSTONE: Transparent to very light grey, loose clean quartz, predominantly fine to medium, minor coarse, moderate sorted, subrounded to subangular, no cement, rare argillaceous matrix, trace pyrite, trace black inclusion, poor to fair inferred porosity, no shows.
1555	1560	95 5	SILTSTONE: Dark grey to dark brown, very argillaceous, grading to CLAYSTONE in places, rare pyrite, trace glauconite, non calcareous, carbonaceous in part, sticky to dispersive, soft, amorphous, subblocky, homogeneous SANDSTONE: Transparent to very light grey, loose clean quartz, predominantly fine to medium, minor coarse, moderate sorted, subrounded to subangular, no cement, rare argillaceous matrix, trace pyrite, trace black inclusion, poor to fair inferred porosity, no shows.
1560	1565	100	SILTSTONE: Dark grey to dark brown, very argillaceous, grading to CLAYSTONE in part, non calcareous, rare pyrite, trace glauconite, carbonaceous in part, sticky to dispersive, soft, amorphous, subblocky, homogeneous
1565	1570	100	SILTSTONE: Dark grey to dark brown, very argillaceous, grading to CLAYSTONE in part, non calcareous, rare pyrite, trace glauconite, carbonaceous in part, sticky to dispersive, soft, amorphous, subblocky, homogeneous
1570	1575	100	SILTSTONE: Dark grey to dark brown, very argillaceous, grading to CLAYSTONE in part, non calcareous, rare pyrite, trace glauconite, carbonaceous in part, sticky to dispersive, soft, amorphous, subblocky, homogeneous
1575	1580	100	SILTSTONE: Dark grey to dark brown, very argillaceous, grading to CLAYSTONE in part, non calcareous, rare pyrite, trace glauconite, carbonaceous in part, sticky to dispersive, soft, amorphous, subblocky, homogeneous
1580	1585	100	SILTSTONE: Dark grey to dark brown, very argillaceous, grading to CLAYSTONE in part, non calcareous, rare pyrite, trace glauconite, carbonaceous in part, sticky to dispersive, soft, amorphous, subblocky, homogeneous
1585	1590	90 10	SILTSTONE: Dark grey to dark brown, grading to CLAYSTONE in part, non calcareous, very argillaceous, rare pyrite, trace glauconite, carbonaceous in part, sticky to dispersive, soft, amorphous, subblocky, homogeneous SANDSTONE: Transparent, loose clean quartz, fine to medium, minor coarse, moderate sorted, subrounded to subangular, no cement, rare argillaceous matrix, trace pyrite, trace black inclusion, poor to fair inferred porosity, no shows.

Depth From	Depth To	Lithology %	Description
1590	1595	95	SILTSTONE: Dark grey to dark brown, grading to CLAYSTONE in part, non calcareous, very argillaceous, rare pyrite, trace glauconite, carbonaceous in part, sticky to dispersive, soft, amorphous, subblocky, homogeneous
		5	SANDSTONE: Transparent, loose clean quartz, fine to medium, minor coarse, moderate sorted, subrounded to subangular, no cement, rare argillaceous matrix, trace pyrite, trace black inclusion, poor to fair inferred porosity, no shows.
1595	1600	90	SILTSTONE: Dark grey to dark brown, grading to CLAYSTONE in part, non calcareous, very argillaceous, rare pyrite, trace glauconite, carbonaceous in part, sticky to dispersive, soft, amorphous, subblocky, homogeneous
		10	SANDSTONE: Transparent, loose clean quartz, fine to medium, minor coarse, moderate sorted, subrounded to subangular, no cement, rare argillaceous matrix, trace pyrite, trace black inclusion, poor to fair inferred porosity, no shows.
1600	1605	100	SILTSTONE: Dark grey to dark brown, grading to CLAYSTONE in part amorphous, very argillaceous, non calcareous, rare pyrite, trace glauconite, carbonaceous in part, sticky to dispersive, soft, subblocky, homogeneous
1605	1610	100	SILTSTONE: Dark grey to dark brown, grading to CLAYSTONE in part amorphous, very argillaceous, non calcareous, rare pyrite, trace glauconite, carbonaceous in part, sticky to dispersive, soft, subblocky, homogeneous
1610	1615	100	SILTSTONE: Dark grey to dark brown, grading to CLAYSTONE in part amorphous, very argillaceous, non calcareous, rare pyrite, trace glauconite, carbonaceous in part, sticky to dispersive, soft, subblocky, homogeneous
1615	1620	100	SILTSTONE: Brown to dark brown, grading to CLAYSTONE, non calcareous, trace fine black grains carbonaceous material, trace pyrite, soft to firm, subblocky, slightly dispersive, homogeneous, slightly sticky
1620	1625	100	SILTSTONE: Brown to dark brown, grading to CLAYSTONE, non calcareous, trace fine black grains carbonaceous material, trace pyrite, soft to firm, subblocky, slightly dispersive, homogeneous, slightly sticky
1625	1630	100	SILTSTONE: Brown to dark brown, grading to CLAYSTONE, non calcareous, trace fine black grains carbonaceous material, trace pyrite, soft to firm, subblocky, slightly dispersive, homogeneous, slightly sticky

Depth From	Depth To	Lithology %	Description
1630	1635	100	SILTSTONE: Brown to dark brown, grading to CLAYSTONE, non calcareous, trace fine black grains carbonaceous material, trace pyrite, soft to firm, subblocky, slightly dispersive, homogeneous, slightly sticky
1635	1640	100	SILTSTONE: Brown to dark brown, grading to CLAYSTONE, non calcareous, trace fine black grains carbonaceous material, trace pyrite, soft to firm, subblocky, slightly dispersive, homogeneous, slightly sticky
1640	1645	100	SILTSTONE: Brown to dark brown, grading to CLAYSTONE, non calcareous, trace fine black grains carbonaceous material, trace pyrite, soft to firm, subblocky, slightly dispersive, homogeneous, slightly sticky
1645	1650	90 10	SILTSTONE: Brown to dark brown, grading to CLAYSTONE, non calcareous, trace fine black grains carbonaceous material, trace pyrite, soft to firm, subblocky, slightly dispersive, homogeneous, slightly sticky SANDSTONE: Translucent to transparent, very fine to fine grains, moderately sorted, subrounded to rounded, no cement, trace mica, poor inferred porosity, no shows.
1650	1655	100	SILTSTONE: Olive grey to brown, very argillaceous, grading to CLAYSTONE, trace mica, very soft to dispersive, sticky in part
1655	1660	90 10	SILTSTONE: Olive grey to brown, very argillaceous, grading to CLAYSTONE, trace mica, very soft to dispersive, sticky in part SANDSTONE: Translucent to transparent, loose quartz grains, very fine to fine grains, moderately sorted, subrounded to rounded, no cement, trace mica, poor inferred porosity, no shows.
1660	1665	70 30	SILTSTONE: Olive grey to brown, very argillaceous, grading to CLAYSTONE, trace mica, very soft to dispersive, sticky in part SANDSTONE: Translucent to transparent, loose quartz grains, medium to coarse grains, occasionally fine, poorly sorted, subrounded to rounded, no cement, trace mica, poor inferred porosity, no shows.
1665	1670	55 45	SILTSTONE: Olive grey to brown, very argillaceous, grading to CLAYSTONE, trace mica, very soft to dispersive, sticky in part SANDSTONE: Translucent to transparent, loose quartz grains, medium to coarse grains, occasionally fine, poorly sorted, subrounded to rounded, no cement, trace mica, trace glauconite, trace coal, poor inferred porosity, no shows.

Depth From	Depth To	Lithology %	Description
1670	1675	45	SILTSTONE: Olive grey to brown, very argillaceous, grading to CLAYSTONE, trace mica, very soft to dispersive, sticky in part
		55	SANDSTONE: Translucent to transparent occasional loose quartz grains, commonly light grey aggregates, medium to coarse grains, occasionally fine, poorly sorted, subrounded to rounded, moderately hard siliceous cement, brown argillaceous matrix, trace mica, trace glauconite, trace coal, moderately hard to hard, friable in places, poor inferred porosity, no shows.
1675	1680	50	SILTSTONE: Olive grey to brown, very argillaceous, grading to CLAYSTONE, trace mica, very soft to dispersive, sticky in part
		50	SANDSTONE: Translucent to transparent occasional loose quartz grains, commonly light grey aggregates, medium to coarse grains, occasionally fine, poorly sorted, subrounded to rounded, moderately hard siliceous cement, brown argillaceous matrix, trace mica, trace glauconite, trace coal, moderately hard to hard, friable in places, poor inferred porosity, no shows.
1680	1685	50	SILTSTONE: Olive grey to brown, very argillaceous, grading to CLAYSTONE, trace mica, very soft to dispersive, sticky in part
		50	SANDSTONE: Light grey to yellow brown aggregates, occasionally loose quartz grains, translucent to transparent to light grey, fine to medium grains, rare coarse grains, moderately sorted, subrounded to rounded, occasionally subangular, moderately strong calcareous cement, light brown argillaceous matrix, friable in part, trace glauconite, very hard to hard, poor inferred porosity, no shows., trace mineral fluorescence
1685	1690	30	SILTSTONE: Olive grey to brown, very argillaceous, grading to CLAYSTONE, trace mica, very soft to dispersive, sticky in part
		70	SANDSTONE: Light grey to yellow brown aggregates, occasionally loose quartz grains, translucent to transparent to light grey, fine to medium grains, rare coarse grains, moderately sorted, subrounded to rounded, occasionally subangular, moderately strong calcareous cement, light brown argillaceous matrix, friable in part, trace glauconite, very hard to hard, poor inferred porosity, no shows., trace mineral fluorescence
1690	1695	30	SILTSTONE: Olive grey to brown, very argillaceous, grading to CLAYSTONE, trace mica, very soft to dispersive, sticky in part
		70	SANDSTONE: Light grey to yellow brown aggregates, occasionally loose quartz grains, translucent to transparent to light grey, fine to medium grains, rare coarse grains, moderately sorted, subrounded to rounded, occasionally subangular, moderately strong calcareous cement, light brown argillaceous matrix, friable in part, trace glauconite, very hard to hard, poor inferred porosity, no shows., trace mineral fluorescence

Depth From	Depth To	Lithology %	Description
1695	1700	40	SILTSTONE: Olive grey to brown, very argillaceous, grading to CLAYSTONE, trace mica, very soft to dispersive, sticky in part
		60	SANDSTONE: Light grey to yellow brown aggregates, occasionally loose quartz grains, translucent to transparent to light grey, fine to medium grains, rare coarse grains, moderately sorted, subrounded to rounded, occasionally subangular, moderately strong calcareous cement, light brown argillaceous matrix, friable in part, trace glauconite, very hard to hard, poor inferred porosity, no shows., trace mineral fluorescence
1700	1705	60	SILTSTONE: Olive grey to brown, very argillaceous, grading to CLAYSTONE, trace mica, very soft to dispersive, sticky in part
		40	SANDSTONE: Light grey to yellow brown aggregates, occasionally loose quartz grains, translucent to transparent to light grey, fine to medium grains, rare coarse grains, moderately sorted, subrounded to rounded, occasionally subangular, moderately strong calcareous cement, light brown argillaceous matrix, friable in part, trace glauconite, very hard to hard, poor inferred porosity, no shows., trace mineral fluorescence
1705	1710	60	SILTSTONE: Olive grey to brown, very argillaceous, grading to CLAYSTONE, trace mica, very soft to dispersive, sticky in part
		40	SANDSTONE: Light grey to yellow brown aggregates, occasionally loose quartz grains, translucent to transparent to light grey, fine to medium grains, rare coarse grains, moderately sorted, subrounded to rounded, occasionally subangular, moderately strong calcareous cement, light brown argillaceous matrix, friable in part, trace glauconite, very hard to hard, poor inferred porosity, no shows.
1710	1715	30	SILTSTONE: Olive grey to brown, very argillaceous, grading to CLAYSTONE, trace mica, very soft to dispersive, sticky in part
		70	SANDSTONE: Light grey to yellow brown aggregates, occasionally loose quartz grains, translucent to transparent to light grey, fine to medium grains, rare coarse grains, moderately sorted, subrounded to rounded, occasionally subangular, moderately strong calcareous cement, light brown argillaceous matrix, friable in part, trace glauconite, very hard to hard, poor inferred porosity, no shows.
1715	1720	60	SILTSTONE: Olive grey to brown, very argillaceous, grading to CLAYSTONE, trace mica, very soft to dispersive, sticky in part
		40	SANDSTONE: Light grey to yellow brown aggregates, occasionally loose quartz grains, translucent to transparent to light grey, fine to medium grains, rare coarse grains, moderately sorted, subrounded to rounded, occasionally subangular, moderately strong calcareous cement, light brown argillaceous matrix, friable in part, trace glauconite, very hard to hard, poor inferred porosity, no shows.

Depth From	Depth To	Lithology %	Description
1720	1725	90	SILTSTONE: Olive grey to brown, very argillaceous, grading to CLAYSTONE, trace mica, very soft to dispersive, sticky in part
		10	SANDSTONE: Light grey to yellow brown aggregates, occasionally loose quartz grains, translucent to transparent to light grey, fine to medium grains, rare coarse grains, moderately sorted, subrounded to rounded, occasionally subangular, moderately strong calcareous cement, light brown argillaceous matrix, friable in part, trace glauconite, very hard to hard, poor inferred porosity, no shows.
1725	1730	70	SILTSTONE: Olive grey to brown, very argillaceous, grading to CLAYSTONE, trace mica, very soft to dispersive, sticky in part
		30	SANDSTONE: Light grey to yellow brown aggregates, occasionally loose quartz grains, translucent to transparent to light grey, fine to medium grains, rare coarse grains, moderately sorted, subrounded to rounded, occasionally subangular, moderately strong calcareous cement, light brown argillaceous matrix, friable in part, trace glauconite, very hard to hard, poor inferred porosity, no shows.
1730	1735	70	SILTSTONE: Olive grey to brown, very argillaceous, grading to CLAYSTONE, trace mica, very soft to dispersive, sticky in part
		30	SANDSTONE: Light grey to yellow brown aggregates, occasionally loose quartz grains, translucent to transparent to light grey, fine to medium grains, rare coarse grains, moderately sorted, subrounded to rounded, occasionally subangular, moderately strong calcareous cement, light brown argillaceous matrix, friable in part, trace glauconite, very hard to hard, poor inferred porosity, no shows.
1735	1740	70	SILTSTONE: Olive grey to brown, very argillaceous, grading to CLAYSTONE, trace mica, very soft to dispersive, sticky in part
		30	SANDSTONE: Light grey to yellow brown aggregates, occasionally loose quartz grains, translucent to transparent to light grey, fine to medium grains, rare coarse grains, moderately sorted, subrounded to rounded, occasionally subangular, siliceous cement, slightly to non calcareous, light brown argillaceous matrix, friable in part, trace glauconite, very hard to hard, poor inferred porosity, no shows.
1740	1745	70	SILTSTONE: Olive grey to brown, very argillaceous, grading to CLAYSTONE, trace mica, very soft to dispersive, sticky in part
		30	SANDSTONE: Light grey to yellow brown aggregates, occasionally loose quartz grains, translucent to transparent to light grey, fine to medium grains, rare coarse grains, moderately sorted, subrounded to rounded, occasionally subangular, siliceous cement, slightly to non calcareous, light brown argillaceous matrix, friable in part, trace glauconite, very hard to hard, poor inferred porosity, no shows.

Depth From	Depth To	Lithology %	Description
1745	1750	50	SILTSTONE: Olive grey to brown, very argillaceous, grading to CLAYSTONE, trace mica, very soft to dispersive, sticky in part
		50	SANDSTONE: Light grey to yellow brown aggregates, occasionally loose quartz grains, translucent to transparent to light grey, fine to medium grains, rare coarse grains, moderately sorted, subrounded to rounded, occasionally subangular, siliceous cement, slightly to non calcareous, light brown argillaceous matrix, friable in part, trace glauconite, very hard to hard, poor inferred porosity, no shows.
1750	1755	50	SILTSTONE: Olive grey to brown, very argillaceous, grading to CLAYSTONE, trace mica, very soft to dispersive, sticky in part
		50	SANDSTONE: Light grey to yellow brown aggregates, occasionally loose quartz grains, translucent to transparent to light grey, fine to medium grains, rare coarse grains, moderately sorted, subrounded to rounded, occasionally subangular, siliceous cement, slightly to non calcareous, light brown argillaceous matrix, friable in part, trace glauconite, very hard to hard, poor inferred porosity, no shows.
1755	1760	40	SILTSTONE: Olive grey to brown, very argillaceous, grading to CLAYSTONE, trace mica, very soft to dispersive, sticky in part
		60	SANDSTONE: Light grey to yellow brown aggregates, occasionally loose quartz grains, translucent to transparent to light grey, fine to medium grains, rare coarse grains, moderately sorted, subrounded to rounded, occasionally subangular, siliceous cement, slightly to non calcareous, light brown argillaceous matrix, friable in part, trace glauconite, very hard to hard, poor inferred porosity, no shows.
1760	1765	35	SILTSTONE: Olive grey to brown, very argillaceous, grading to CLAYSTONE, trace mica, very soft to dispersive, sticky in part
		65	SANDSTONE: Light grey to yellow brown aggregates, occasionally loose quartz grains, translucent to transparent to light grey, fine to medium grains, rare coarse grains, moderately sorted, subrounded to rounded, occasionally subangular, siliceous cement, slightly to non calcareous, light brown argillaceous matrix, friable in part, trace glauconite, very hard to hard, poor inferred porosity, no shows.
1765	1770	45	SILTSTONE: Olive grey to brown, very argillaceous, grading to CLAYSTONE, trace mica, very soft to dispersive, sticky in part
		55	SANDSTONE: Light grey to yellow brown aggregates, occasionally loose quartz grains, translucent to transparent to light grey, fine to medium grains, rare coarse grains, moderately sorted, subrounded to rounded, occasionally subangular, siliceous cement, slightly to non calcareous, light brown argillaceous matrix, friable in part, trace glauconite, very hard to hard, poor inferred porosity, no shows.

Depth From	Depth To	Lithology %	Description
1770	1775	35	SILTSTONE: Olive grey to brown, very argillaceous, grading to CLAYSTONE, trace mica, very soft to dispersive, sticky in part
		65	SANDSTONE: Light grey to yellow brown aggregates, occasionally loose quartz grains, translucent to transparent to light grey, fine to medium grains, rare coarse grains, moderately sorted, subrounded to rounded, occasionally subangular, siliceous cement, slightly to non calcareous, light brown argillaceous matrix, friable in part, trace glauconite, very hard to hard, poor inferred porosity, no shows.
1775	1780	25	SILTSTONE: Olive grey to brown, very argillaceous, grading to CLAYSTONE, trace mica, very soft to dispersive, sticky in part
		75	SANDSTONE: Light grey to yellow brown aggregates, occasionally loose quartz grains, translucent to transparent to light grey, fine to medium grains, occasional coarse grains, poorly sorted, subrounded to rounded, occasionally subangular, siliceous cement, slightly to non calcareous, light brown argillaceous matrix, friable in part, trace glauconite, very hard to hard, poor inferred porosity, no shows.
1780	1785	35	SILTSTONE: Olive grey to brown, very argillaceous, grading to CLAYSTONE, trace mica, very soft to dispersive, sticky in part
		65	SANDSTONE: Light grey to yellow brown aggregates, occasionally loose quartz grains, translucent to transparent to light grey, fine to medium grains, occasional coarse grains, poorly sorted, subrounded to rounded, occasionally subangular, siliceous cement, slightly to non calcareous, light brown argillaceous matrix, friable in part, trace glauconite, very hard to hard, poor inferred porosity, no shows.
1785	1790	40	SILTSTONE: Olive grey to brown, very argillaceous, grading to CLAYSTONE, trace mica, minor black specks, very soft to dispersive, sticky in part
		60	SANDSTONE: Light grey to yellow brown aggregates, occasionally loose quartz grains, translucent to transparent to light grey, fine to medium grains, occasional coarse grains, poorly sorted, subrounded to rounded, occasionally subangular, siliceous cement, slightly to non calcareous, light brown argillaceous matrix, friable in part, trace glauconite, very hard to hard, poor inferred porosity, no shows.
1790	1795	60	SILTSTONE: Olive grey to brown, very argillaceous, grading to CLAYSTONE, trace mica, minor black specks, very soft to dispersive, sticky in part
		40	SANDSTONE: Light grey to yellow brown aggregates, occasionally loose quartz grains, translucent to transparent to light grey, fine to medium grains, occasional coarse grains, poorly sorted, subrounded to rounded, occasionally subangular, siliceous cement, slightly to non calcareous, light brown argillaceous matrix, friable in part, trace glauconite, very hard to hard, poor inferred porosity, no shows.

Depth From	Depth To	Lithology %	Description
1795	1800	40	SILTSTONE: Olive grey to brown, very argillaceous, grading to CLAYSTONE, trace mica, minor black specks, very soft to dispersive, sticky in part
		60	SANDSTONE: Light grey to yellow brown aggregates, occasionally loose quartz grains, translucent to transparent to light grey, fine to medium grains, occasional coarse grains, poorly sorted, subrounded to rounded, occasionally subangular, siliceous cement, slightly to non calcareous, light brown argillaceous matrix, friable in part, trace glauconite, very hard to hard, poor inferred porosity, no shows.
1800	1805	35	SILTSTONE: Olive grey to brown, very argillaceous, grading to CLAYSTONE, trace mica, minor black specks, very soft to dispersive, sticky in part
		65	SANDSTONE: Light grey to yellow brown aggregates, occasionally loose quartz grains, translucent to transparent to light grey, fine to medium grains, occasional coarse grains, poorly sorted, subrounded to rounded, occasionally subangular, siliceous cement, slightly to non calcareous, light brown argillaceous matrix, friable in part, trace glauconite, very hard to hard, poor inferred porosity, no shows.
1805	1810	25	SILTSTONE: Olive grey to brown, very argillaceous, grading to CLAYSTONE, trace mica, minor black specks, very soft to dispersive, sticky in part
		75	SANDSTONE: Light grey to yellow brown aggregates, occasionally loose quartz grains, translucent to transparent to light grey, fine to medium grains, occasional coarse grains, poorly sorted, subrounded to rounded, occasionally subangular, siliceous cement, slightly to non calcareous, light brown argillaceous matrix, friable in part, trace glauconite, very hard to hard, poor inferred porosity, no shows.
1810	1815	30	SILTSTONE: Olive grey to brown, very argillaceous, grading to CLAYSTONE, trace mica, minor black specks, very soft to dispersive, sticky in part
		70	SANDSTONE: Light grey to yellow brown aggregates, occasionally loose quartz grains, translucent to transparent to light grey, fine to medium grains, occasional coarse grains, poorly sorted, subrounded to rounded, occasionally subangular, siliceous cement, slightly to non calcareous, light brown argillaceous matrix, friable in part, trace glauconite, very hard to hard, poor inferred porosity, no shows.

Depth From	Depth To	Lithology %	Description
1815	1820	40	SILTSTONE: Olive grey to brown, very argillaceous, grading to CLAYSTONE, trace mica, minor black specks, very soft to dispersive, sticky in part
		60	SANDSTONE: Light grey to yellow brown aggregates, occasionally loose quartz grains, translucent to transparent to light grey, fine to medium grains, occasional coarse grains, poorly sorted, subrounded to rounded, occasionally subangular, siliceous cement, slightly to non calcareous, light brown argillaceous matrix, friable in part, trace glauconite, very hard to hard, poor inferred porosity, no shows.
1820	1825	40	SILTSTONE: Olive grey to brown, very argillaceous, grading to CLAYSTONE, trace mica, minor black specks, very soft to dispersive, sticky in part
		60	SANDSTONE: Light grey to yellow brown aggregates, occasionally loose quartz grains, translucent to transparent to light grey, fine to medium grains, occasional coarse grains, poorly sorted, subrounded to rounded, occasionally subangular, siliceous cement, slightly to non calcareous, light brown argillaceous matrix, friable in part, trace glauconite, very hard to hard, poor inferred porosity, no shows.
1825	1830	50	SILTSTONE: Olive grey to brown, very argillaceous, grading to CLAYSTONE, trace mica, minor black specks, very soft to dispersive, sticky in part
		50	SANDSTONE: Light grey to yellow brown aggregates, occasionally loose quartz grains, translucent to transparent to light grey, fine to medium grains, occasional coarse grains, poorly sorted, subrounded to rounded, occasionally subangular, siliceous cement, slightly to non calcareous, light brown argillaceous matrix, friable in part, trace glauconite, very hard to hard, poor inferred porosity, no shows.
1830	1835	40	SILTSTONE: Olive grey to brown, very argillaceous, grading to CLAYSTONE, trace mica, minor black specks, very soft to dispersive, sticky in part
		60	SANDSTONE: Light grey to yellow brown aggregates, occasionally loose quartz grains, translucent to transparent to light grey, fine to medium grains, minor coarse grains, moderately sorted, subrounded to rounded, occasionally subangular, siliceous cement, slightly to non calcareous, light brown argillaceous matrix, friable in part, trace glauconite, very hard to hard, poor inferred porosity, no shows.

Depth From	Depth To	Lithology %	Description
1835	1840	50	SILTSTONE: Olive grey to brown, very argillaceous, grading to CLAYSTONE, trace mica, minor black specks, very soft to dispersive, sticky in part
		50	SANDSTONE: Light grey to yellow brown aggregates, occasionally loose quartz grains, translucent to transparent to light grey, fine to medium grains, minor coarse grains, moderately sorted, subrounded to rounded, occasionally subangular, siliceous cement, slightly to non calcareous, light brown argillaceous matrix, friable in part, trace glauconite, very hard to hard, poor inferred porosity, no shows.
1840	1845	70	SILTSTONE: Olive grey to brown, very argillaceous, grading to CLAYSTONE, trace mica, minor black specks, very soft to dispersive, sticky in part
		30	SANDSTONE: Light grey to yellow brown aggregates, occasionally loose quartz grains, translucent to transparent to light grey, fine to medium grains, minor coarse grains, moderately sorted, subrounded to rounded, occasionally subangular, siliceous cement, slightly to non calcareous, light brown argillaceous matrix, friable in part, trace glauconite, very hard to hard, poor inferred porosity, no shows.
1845	1850	60	SILTSTONE: Olive grey to brown, very argillaceous, grading to CLAYSTONE, trace mica, minor black specks, very soft to dispersive, sticky in part
		40	SANDSTONE: Light grey to yellow brown aggregates, occasionally loose quartz grains, translucent to transparent to light grey, fine to medium grains, minor coarse grains, moderately sorted, subrounded to rounded, occasionally subangular, siliceous cement, slightly to non calcareous, light brown argillaceous matrix, friable in part, trace glauconite, very hard to hard, poor inferred porosity, no shows.
1850	1855	50	SILTSTONE: Olive grey to brown, very argillaceous, grading to CLAYSTONE, trace mica, minor black specks, very soft to dispersive, sticky in part
		50	SANDSTONE: Light grey to yellow brown aggregates, occasionally loose quartz grains, translucent to transparent to light grey, fine to medium grains, minor coarse grains, moderately sorted, subrounded to rounded, occasionally subangular, siliceous cement, minor strong calcareous cement, light brown argillaceous matrix, friable in part, trace glauconite, very hard to hard, poor inferred porosity, no shows., trace mineral fluorescence

Depth From	Depth To	Lithology %	Description
1855	1860	40	SILTSTONE: Olive grey to brown, very argillaceous, grading to CLAYSTONE, trace mica, minor black specks, very soft to dispersive, sticky in part
		60	SANDSTONE: Light grey to yellow brown aggregates, occasionally loose quartz grains, translucent to transparent to light grey, fine to medium grains, minor coarse grains, moderately sorted, subrounded to rounded, occasionally subangular, siliceous cement, light brown argillaceous matrix, friable in part, trace glauconite, very hard to hard, poor inferred porosity, no shows.
1860	1865	40	SILTSTONE: Olive grey to brown, very argillaceous, grading to CLAYSTONE, trace mica, minor black specks, very soft to dispersive, sticky in part
		60	SANDSTONE: Light grey to yellow brown aggregates, occasionally loose quartz grains, translucent to transparent to light grey, fine to medium grains, minor coarse grains, moderately sorted, subrounded to rounded, occasionally subangular, siliceous cement, minor moderately strong calcareous cement, light brown argillaceous matrix, friable in part, trace glauconite, very hard to hard, poor inferred porosity, no shows.
1865	1870	50	SILTSTONE: Olive grey to brown, very argillaceous, grading to CLAYSTONE, trace mica, minor black specks, very soft to dispersive, sticky in part
		50	SANDSTONE: Light grey to yellow brown aggregates, occasionally loose quartz grains, translucent to transparent to light grey, fine to medium grains, minor coarse grains, moderately sorted, subrounded to rounded, occasionally subangular, siliceous cement, light brown argillaceous matrix, friable in part, trace glauconite, very hard to hard, poor inferred porosity, no shows.
1870	1875	55	SILTSTONE: Olive grey to brown, very argillaceous, grading to CLAYSTONE, trace mica, minor black specks, very soft to dispersive, sticky in part
		45	SANDSTONE: Light grey to yellow brown aggregates, occasionally loose quartz grains, translucent to transparent to light grey, fine to medium grains, minor coarse grains, moderately sorted, subrounded to rounded, occasionally subangular, siliceous cement, light brown argillaceous matrix, friable in part, trace glauconite, very hard to hard, poor inferred porosity, no shows.

Depth From	Depth To	Lithology %	Description
1875	1880	60	SILTSTONE: Olive grey to brown, very argillaceous, grading to CLAYSTONE, trace mica, minor black specks, very soft to dispersive, sticky in part
		40	SANDSTONE: Light grey to yellow brown aggregates, occasionally loose quartz grains, translucent to transparent to light grey, fine to medium grains, minor coarse grains, moderately sorted, subrounded to rounded, occasionally subangular, siliceous cement, light brown argillaceous matrix, friable in part, trace glauconite, very hard to hard, poor inferred porosity, no shows.
1880	1885	50	SILTSTONE: Olive grey to brown, very argillaceous, grading to CLAYSTONE, trace mica, minor black specks, very soft to dispersive, sticky in part
		50	SANDSTONE: Light grey to yellow brown aggregates, occasionally loose quartz grains, translucent to transparent to light grey, fine to medium grains, minor coarse grains, moderately sorted, subrounded to rounded, occasionally subangular, siliceous cement, light brown argillaceous matrix, friable in part, trace glauconite, very hard to hard, poor inferred porosity, no shows.
1885	1890	60	SILTSTONE: Olive grey to brown, very argillaceous, grading to CLAYSTONE, trace mica, minor black specks, very soft to dispersive, sticky in part
		40	SANDSTONE: Light grey to yellow brown aggregates, occasionally loose quartz grains, translucent to transparent to light grey, fine to medium grains, minor coarse grains, moderately sorted, subrounded to rounded, occasionally subangular, siliceous cement, light brown argillaceous matrix, friable in part, trace glauconite, very hard to hard, poor inferred porosity, no shows.
1890	1895	70	SILTSTONE: Olive grey to brown, very argillaceous, grading to CLAYSTONE, trace mica, minor black specks, very soft to dispersive, sticky in part
		30	SANDSTONE: Light grey to yellow brown aggregates, occasionally loose quartz grains, translucent to transparent to light grey, fine to medium grains, minor coarse grains, moderately sorted, subrounded to rounded, occasionally subangular, siliceous cement, light brown argillaceous matrix, friable in part, trace glauconite, very hard to hard, poor inferred porosity, no shows.

Depth From	Depth To	Lithology %	Description
1895	1900	60	SILTSTONE: Olive grey to brown, very argillaceous, grading to CLAYSTONE, trace mica, minor black specks, very soft to dispersive, sticky in part
		40	SANDSTONE: Light grey to yellow brown aggregates, occasionally loose quartz grains, translucent to transparent to light grey, fine to medium grains, minor coarse grains, moderately sorted, subrounded to rounded, occasionally subangular, siliceous cement, light brown argillaceous matrix, friable in part, trace glauconite, very hard to hard, poor inferred porosity, no shows.
1900	1905	60	SILTSTONE: Olive grey to brown, very argillaceous, grading to CLAYSTONE, trace mica, minor black specks, very soft to dispersive, sticky in part
		40	SANDSTONE: Light grey to yellow brown aggregates, occasionally loose quartz grains, translucent to transparent to light grey, fine to medium grains, minor coarse, poorly sorted, subrounded to subangular, occasionally subangular, moderately siliceous cement, slightly calcareous, light brown to white argillaceous matrix, trace glauconite, trace black fragment inclusion, friable in part, moderate hard to hard poor inferred porosity, no shows., trace mineral fluorescence
1905	1910	70	SILTSTONE: Olive grey to brown, very argillaceous, grading to CLAYSTONE, trace mica, minor black specks, very soft to dispersive, sticky in part
		30	SANDSTONE: Light grey to yellow brown aggregates, occasionally loose quartz grains, translucent to transparent to light grey, fine to medium grains, minor coarse, poorly sorted, subrounded to subangular, occasionally subangular, moderately siliceous cement, slightly calcareous, light brown to white argillaceous matrix, trace glauconite, trace black fragment inclusion, friable in part, moderate hard to hard poor inferred porosity, no shows., trace mineral fluorescence
1910	1915	60	SILTSTONE: Olive grey to brown, very argillaceous, grading to CLAYSTONE, trace mica, minor black specks, very soft to dispersive, sticky in part
		40	SANDSTONE: Light grey to yellow brown aggregates, occasionally loose quartz grains, translucent to transparent to light grey, fine to medium grains, minor coarse, poorly sorted, subrounded to subangular, occasionally subangular, moderately siliceous cement, slightly calcareous, light brown to white argillaceous matrix, trace glauconite, trace black fragment inclusion, friable in part, moderate hard to hard poor inferred porosity, no shows., trace mineral fluorescence

Depth From	Depth To	Lithology %	Description
1915	1920	70	SILTSTONE: Olive grey to brown, very argillaceous, grading to CLAYSTONE, trace mica, minor black specks, very soft to dispersive, sticky in part
		30	SANDSTONE: Light grey to yellow brown aggregates, occasionally loose quartz grains, translucent to transparent to light grey, fine to medium grains, minor coarse, poorly sorted, subrounded to subangular, occasionally subangular, moderately siliceous cement, slightly calcareous, light brown to white argillaceous matrix, trace glauconite, trace black fragment inclusion, friable in part, moderate hard to hard poor inferred porosity, no shows., trace mineral fluorescence
1920	1925	90	SILTSTONE: Olive black to dark brown, arenaceous in part, grading to SANDSTONE in part, non calcareous, common black specks, soft to dispersive, amorphous to subblocky
		10	SANDSTONE: Light grey to yellow brown aggregates, occasionally loose quartz grains, translucent to transparent, very fine to fine, commonly medium, rare coarse, poorly sorted, subrounded to subangular, moderately siliceous cement, light brown argillaceous matrix, trace glauconite, trace black fragment inclusion, friable in part, moderate hard to hard, poor inferred porosity, no shows.
1925	1930	80	SILTSTONE: Olive black to dark brown, arenaceous in part, grading to SANDSTONE in part, non calcareous, common black specks, soft to dispersive, amorphous to subblocky
		20	SANDSTONE: Light grey to yellow brown aggregates, occasionally loose quartz grains, translucent to transparent, very fine to fine, commonly medium, rare coarse, poorly sorted, subrounded to subangular, moderately siliceous cement, light brown argillaceous matrix, trace glauconite, trace black fragment inclusion, friable in part, moderate hard to hard, poor inferred porosity, no shows.
1930	1935	75	SILTSTONE: Olive black to dark brown, arenaceous in part, grading to SANDSTONE in part, non calcareous, common black specks, soft to dispersive, amorphous to subblocky
		25	SANDSTONE: Light grey to yellow brown aggregates, occasionally loose quartz grains, translucent to transparent, very fine to fine, commonly medium, rare coarse, poorly sorted, subrounded to subangular, moderately siliceous cement, light brown argillaceous matrix, trace glauconite, trace black fragment inclusion, friable in part, moderate hard to hard, poor inferred porosity, no shows.

Depth From	Depth To	Lithology %	Description
1935	1940	80 20	SILTSTONE: Olive black to dark brown, arenaceous in part, grading to SANDSTONE in part, non calcareous, common black specks, soft to dispersive, amorphous to subblocky SANDSTONE: Light grey to yellow brown aggregates, occasionally loose quartz grains, translucent to transparent, very fine to fine, commonly medium, rare coarse, poorly sorted, subrounded to subangular, moderately siliceous cement, light brown argillaceous matrix, trace glauconite, trace black fragment inclusion, friable in part, moderate hard to hard, poor inferred porosity, no shows.
1940	1945	80 20	SILTSTONE: Olive black to dark brown, arenaceous in part, grading to SANDSTONE in part, non calcareous, common black specks, soft to dispersive, amorphous to subblocky SANDSTONE: Light grey to yellow brown aggregates, occasionally loose quartz grains, translucent to transparent, very fine to fine, commonly medium, rare coarse, poorly sorted, subrounded to subangular, moderately siliceous cement, light brown argillaceous matrix, trace glauconite, trace black fragment inclusion, friable in part, moderate hard to hard, poor inferred porosity, no shows.
1945	1950	75 15	SILTSTONE: Olive black to dark brown, arenaceous in part, grading to SANDSTONE in part, non calcareous, common black specks, soft to dispersive, amorphous to subblocky SANDSTONE: Light grey to yellow brown aggregates, occasionally loose quartz grains, translucent to transparent, very fine to fine, commonly medium, rare coarse, poorly sorted, subrounded to subangular, moderately siliceous cement, light brown argillaceous matrix, trace glauconite, trace black fragment inclusion, friable in part, moderate hard to hard, poor inferred porosity, no shows.
1950	1955	90 10	SILTSTONE: Olive black to dark brown, arenaceous in part, grading to SANDSTONE in part, non calcareous, common black specks, soft to dispersive, amorphous to subblocky SANDSTONE: Light grey to yellow brown aggregates, occasionally loose quartz grains, translucent to transparent, very fine to fine, commonly medium, rare coarse, poorly sorted, subrounded to subangular, moderately siliceous cement, light brown argillaceous matrix, trace glauconite, trace black fragment inclusion, friable in part, moderate hard to hard, poor inferred porosity, no shows.

Depth From	Depth To	Lithology %	Description
1955	1960	90 10	SILTSTONE: Olive black to dark brown, arenaceous in part, grading to SANDSTONE in part, non calcareous, common black specks, soft to dispersive, amorphous to subblocky SANDSTONE: Light grey to yellow brown aggregates, occasionally loose quartz grains, translucent to transparent, very fine to fine, commonly medium, rare coarse, poorly sorted, subrounded to subangular, moderately siliceous cement, light brown argillaceous matrix, trace glauconite, trace black fragment inclusion, friable in part, moderate hard to hard, poor inferred porosity, no shows.
1960	1965	90 10	SILTSTONE: Olive black to dark brown, arenaceous in part, grading to SANDSTONE in part, non calcareous, common black specks, soft to dispersive, amorphous to subblocky SANDSTONE: Light grey to yellow brown aggregates, occasionally loose quartz grains, translucent to transparent, very fine to fine, commonly medium, rare coarse, poorly sorted, subrounded to subangular, moderately siliceous cement, light brown argillaceous matrix, trace glauconite, increasing trace black fragment inclusion, friable in part, moderate hard to hard, poor inferred porosity, no shows.
1965	1970	90 10	SILTSTONE: Olive black to dark brown, arenaceous in part, grading to SANDSTONE in part, non calcareous, common black specks, soft to dispersive, amorphous to subblocky SANDSTONE: Light grey to yellow brown aggregates, occasionally loose quartz grains, translucent to transparent, very fine to fine, commonly medium, rare coarse, poorly sorted, subrounded to subangular, moderately siliceous cement, light brown argillaceous matrix, trace glauconite, increasing trace black fragment inclusion, friable in part, moderate hard to hard, poor inferred porosity, no shows.
1970	1975	80 20	SILTSTONE: Olive black to dark brown, arenaceous in part, grading to SANDSTONE in part, non calcareous, common black specks, soft to dispersive, amorphous to subblocky SANDSTONE: Light grey to yellow brown aggregates, occasionally loose quartz grains, translucent to transparent, very fine to fine, commonly medium, rare coarse, poorly sorted, subrounded to subangular, moderately siliceous cement, light brown argillaceous matrix, trace glauconite, increasing trace black fragment inclusion, friable in part, moderate hard to hard, poor inferred porosity, no shows.

Depth From	Depth To	Lithology %	Description
1975	1980	80 20	SILTSTONE: Olive black to dark brown, arenaceous in part, grading to SANDSTONE in part, non calcareous, common black specks, soft to dispersive, amorphous to subblocky SANDSTONE: Light grey to yellow brown aggregates, occasionally loose quartz grains, translucent to transparent, very fine to fine, commonly medium, rare coarse, poorly sorted, subrounded to subangular, moderately siliceous cement, light brown argillaceous matrix, trace glauconite, increasing trace black fragment inclusion, friable in part, moderate hard to hard, poor inferred porosity, no shows.
1980	1985	85 15	SILTSTONE: Olive black to dark brown, arenaceous in part, grading to SANDSTONE in part, non calcareous, common black specks, soft to dispersive, amorphous to subblocky SANDSTONE: Light grey to yellow brown aggregates, occasionally loose quartz grains, translucent to transparent, very fine to medium, rare coarse, moderately sorted, subrounded to subangular, moderately siliceous cement, light brown argillaceous matrix, trace glauconite, increasing trace black fragment inclusion, friable in part, moderate hard to hard, poor inferred porosity, no shows.
1985	1990	30 70	SILTSTONE: Olive black to dark brown, arenaceous in part, grading to SANDSTONE in part, non calcareous, common black specks, soft to dispersive, amorphous to subblocky SANDSTONE: Light grey to yellow brown aggregates, occasionally loose quartz grains, translucent to transparent, very fine to medium, rare coarse, moderately sorted, subrounded to subangular, moderately siliceous cement, light brown argillaceous matrix, trace glauconite, increasing trace black fragment inclusion, friable in part, moderate hard to hard, poor inferred porosity, no shows.
1990	1995	85 15	SILTSTONE: Olive black to dark brown, arenaceous in part, grading to SANDSTONE in part, non calcareous, common black specks, soft to dispersive, amorphous to subblocky SANDSTONE: Light grey to yellow brown aggregates, occasionally loose quartz grains, translucent to transparent, very fine to medium, minor coarse, poorly sorted, subrounded to subangular, moderately siliceous cement, light brown argillaceous matrix, trace glauconite, increasing trace black fragment inclusion, friable in part, moderate hard to hard, poor inferred porosity, no shows.

Depth From	Depth To	Lithology %	Description
1995	2000	70 30	SILTSTONE: Olive black to dark brown, arenaceous in part, grading to SANDSTONE in part, non calcareous, common black specks, soft to dispersive, amorphous to subblocky SANDSTONE: Light grey to yellow brown aggregates, occasionally loose quartz grains, translucent to transparent, very fine to medium, minor coarse, poorly sorted, subrounded to subangular, moderately siliceous cement, light brown argillaceous matrix, trace glauconite, increasing trace black fragment inclusion, friable in part, moderate hard to hard, poor inferred porosity, no shows.
2000	2005	40 60	SILTSTONE: Olive black to dark brown, arenaceous in part, grading to SANDSTONE in part, non calcareous, common black specks, soft to dispersive, amorphous to subblocky SANDSTONE: Light grey to yellow brown aggregates, occasionally loose quartz grains, translucent to transparent, very fine to medium, minor coarse, moderately sorted, subrounded to subangular, moderately siliceous cement, light brown argillaceous matrix, trace glauconite, increasing trace black fragment inclusion, friable in part, moderate hard to hard, poor inferred porosity, no shows.
2005	2010	45 55	SILTSTONE: Olive black to dark brown, arenaceous in part, grading to SANDSTONE in part, non calcareous, common black specks, soft to dispersive, amorphous to subblocky SANDSTONE: Light grey to yellow brown aggregates, occasionally loose quartz grains, translucent to transparent, very fine to medium, minor coarse, moderately sorted, subrounded to subangular, moderately siliceous cement, light brown argillaceous matrix, trace glauconite, increasing trace black fragment inclusion, friable in part, moderate hard to hard, poor inferred porosity, no shows.
2010	2015	60 40	SILTSTONE: Olive black to dark brown, arenaceous in part, grading to SANDSTONE in part, non calcareous, common black specks, soft to dispersive, amorphous to subblocky SANDSTONE: Light grey to yellow brown aggregates, occasionally loose quartz grains, translucent to transparent, very fine to medium, minor coarse, moderately sorted, subrounded to subangular, moderately siliceous cement, light brown argillaceous matrix, trace glauconite, increasing trace black fragment inclusion, friable in part, moderate hard to hard, poor inferred porosity, no shows.

Depth From	Depth To	Lithology %	Description
2015	2020	70 30	SILTSTONE: Olive black to dark brown, arenaceous in part, grading to SANDSTONE in part, non calcareous, common black specks, soft to dispersive, amorphous to subblocky SANDSTONE: Light grey to yellow brown aggregates, occasionally loose quartz grains, translucent to transparent, fine to medium, minor coarse, moderately sorted, subrounded to subangular, moderately siliceous cement, light brown argillaceous matrix, trace glauconite, friable in part, moderate hard to hard, poor inferred porosity, no shows.
2020	2025	30 70	SILTSTONE: Olive black to dark brown, arenaceous in part, grading to SANDSTONE in part, non calcareous, common black specks, soft to dispersive, amorphous to subblocky SANDSTONE: Light grey to yellow brown aggregates, occasionally loose quartz grains, translucent to transparent, fine to medium, minor coarse, moderately sorted, subrounded to subangular, moderately siliceous cement, light brown argillaceous matrix, trace glauconite, friable in part, moderate hard to hard, poor inferred porosity, no shows.
2025	2030	40 60	SILTSTONE: Olive black to dark brown, arenaceous in part, grading to SANDSTONE in part, non calcareous, soft to dispersive, common black specks, amorphous to subblocky SANDSTONE: Light grey to yellow brown aggregates, predominantly loose grains, fine to medium, minor coarse, moderately sorted, subrounded to rounded, moderately siliceous cement, common light brown argillaceous matrix, friable in part, moderately hard to hard, poor to fair inferred porosity, no shows.
2030	2035	70 30	SILTSTONE: Olive black to dark brown, arenaceous in part, grading to SANDSTONE in part, non calcareous, common black specks, soft to dispersive, amorphous to subblocky SANDSTONE: Light grey to yellow brown aggregates, predominantly loose grains, fine to medium, rare coarse, moderately sorted, subrounded to rounded, moderately siliceous cement, common light brown argillaceous matrix, friable in part, moderately hard to hard, poor to fair inferred porosity, no shows.
2035	2040	65 35	SILTSTONE: Olive black to dark brown, arenaceous in part, grading to SANDSTONE in part, non calcareous, common black specks, soft to dispersive, amorphous to subblocky SANDSTONE: Light grey to yellow brown aggregates, predominantly loose grains, fine to medium, rare coarse, moderately sorted, subrounded to rounded, moderately siliceous cement, trace strong calcareous cement, common light brown argillaceous matrix, friable in part, moderately hard to hard, poor to fair inferred porosity, no shows.

Depth From	Depth To	Lithology %	Description
2040	2045	65 35	SILTSTONE: Olive black to dark brown, arenaceous in part, grading to SANDSTONE in part, non calcareous, common black specks, soft to dispersive, amorphous to subblocky SANDSTONE: Light grey to yellow brown aggregates, predominantly loose grains, fine to medium, rare coarse, moderately sorted, subrounded to rounded, moderately siliceous cement, trace strong calcareous cement, common light brown argillaceous matrix, friable in part, moderately hard to hard, poor to fair inferred porosity, no shows., trace mineral fluorescence
2045	2050	60 40	SILTSTONE: Olive black to dark brown, arenaceous in part, grading to SANDSTONE in part, non calcareous, common black specks, soft to dispersive, amorphous to subblocky SANDSTONE: Light grey to yellow brown aggregates, predominantly loose grains, fine to medium, rare coarse, moderately sorted, subrounded to rounded, moderately siliceous cement, trace strong calcareous cement, common light brown argillaceous matrix, friable in part, moderately hard to hard, poor to fair inferred porosity, no shows., trace mineral fluorescence
2050	2055	70 30	SILTSTONE: Olive black to dark brown, arenaceous in part, grading to SANDSTONE in part, non calcareous, common black specks, soft to dispersive, amorphous to subblocky SANDSTONE: Light grey to yellow brown aggregates, predominantly loose grains, fine to medium, rare coarse, moderately sorted, subrounded to rounded, moderately siliceous cement, trace strong calcareous cement, common light brown argillaceous matrix, friable in part, moderately hard to hard, poor to fair inferred porosity, no shows., trace mineral fluorescence
2055	2060	80 20	SILTSTONE: Olive black to dark brown, arenaceous in part, grading to SANDSTONE in part, non calcareous, common black specks, soft to dispersive, amorphous to subblocky SANDSTONE: Light grey to yellow brown aggregates, predominantly loose grains, fine to medium, rare coarse, moderately sorted, subrounded to rounded, moderately siliceous cement, trace strong calcareous cement, common light brown argillaceous matrix, friable in part, moderately hard to hard, poor to fair inferred porosity, no shows., trace mineral fluorescence

Depth From	Depth To	Lithology %	Description
2060	2065	90	SILTSTONE: Olive black to dark brown, arenaceous in part, grading to SANDSTONE in part, non calcareous, common black specks, soft to dispersive, amorphous to subblocky
		10	SANDSTONE: Light grey to yellow brown aggregates, predominantly loose grains, fine to medium, rare coarse, moderately sorted, subrounded to rounded, moderately siliceous cement, trace strong calcareous cement, common light brown argillaceous matrix, friable in part, moderately hard to hard, poor to fair inferred porosity, no shows., trace mineral fluorescence
2065	2070	80	SILTSTONE: Olive black to dark brown, arenaceous in part, grading to SANDSTONE in part, non calcareous, common black specks, trace to rare crystalline calcite, soft to dispersive, amorphous to subblocky
		20	SANDSTONE: Light grey to yellow brown aggregates, predominantly loose grains, fine to medium, rare coarse, moderately sorted, subrounded to rounded, moderately siliceous cement, trace strong calcareous cement, common light brown argillaceous matrix, friable in part, moderately hard to hard, poor to fair inferred porosity, no shows., trace mineral fluorescence
2070	2075	70	SILTSTONE: Olive black to dark brown, arenaceous in part, grading to SANDSTONE in part, non calcareous, common black specks, trace to rare yellowish brown crystalline calcite, soft to dispersive, amorphous to subblocky
		30	SANDSTONE: Light grey to yellow brown aggregates, predominantly loose grains, fine to medium, rare coarse, moderately sorted, subrounded to rounded, moderately siliceous cement, trace strong calcareous cement, common light brown argillaceous matrix, friable in part, moderately hard to hard, poor to fair inferred porosity, no shows., trace mineral fluorescence
2075	2080	80	SILTSTONE: Olive black to dark brown, arenaceous in part, grading to SANDSTONE in part, non calcareous, common black specks, trace to rare yellowish brown crystalline calcite, soft to dispersive, amorphous to subblocky
		20	SANDSTONE: Light grey to yellow brown aggregates, predominantly loose grains, fine to medium, rare coarse, moderately sorted, subrounded to rounded, moderately siliceous cement, trace strong calcareous cement, common light brown argillaceous matrix, friable in part, moderately hard to hard, poor to fair inferred porosity, no shows., trace mineral fluorescence

Depth From	Depth To	Lithology %	Description
2080	2085	80 20	SILTSTONE: Olive black to dark brown, arenaceous in part, grading to SANDSTONE in part, non calcareous, common black specks, trace to rare yellowish brown crystalline calcite, soft to dispersive, amorphous to subblocky SANDSTONE: Light grey to yellow brown aggregates, predominantly loose grains, fine to medium, rare coarse, moderately sorted, subrounded to rounded, moderately siliceous cement, trace strong calcareous cement, abundant light brown argillaceous matrix, friable in part, moderately hard to hard, poor to fair inferred porosity, no shows., trace mineral fluorescence
2085	2090	90 10	SILTSTONE: Olive black to dark brown, arenaceous in part, grading to SANDSTONE in part, non calcareous, common black specks, trace to rare yellowish brown crystalline calcite, soft to dispersive, amorphous to subblocky SANDSTONE: Light grey to yellow brown aggregates, predominantly loose grains, fine to medium, moderately sorted, grading to SILTSTONE in part, subrounded to rounded, moderately siliceous cement, abundant light brown argillaceous matrix, slightly calcareous cement, friable in part, moderately hard, poor to fair inferred porosity, no shows.
2090	2095	100	SILTSTONE: Olive black to dark brown, arenaceous in part, grading to SANDSTONE in part, non calcareous, common black specks, trace to rare yellowish brown crystalline calcite, soft to dispersive, amorphous to subblocky
2095	2100	90 10	SILTSTONE: Olive black to dark brown, arenaceous in part, grading to SANDSTONE in part, non calcareous, common black specks, trace to rare yellowish brown crystalline calcite, soft to dispersive, amorphous to subblocky SANDSTONE: Light grey to yellow brown aggregates, predominantly loose grains, fine to medium, moderately sorted, grading to SILTSTONE in part, subrounded to rounded, moderately siliceous cement, abundant light brown argillaceous matrix, slightly calcareous cement, friable in part, moderately hard, poor to fair inferred porosity, no shows.
2100	2105	95 5	SILTSTONE: Olive black to dark brown, arenaceous in part, grading to SANDSTONE in part, non calcareous, common black specks, trace to rare yellowish brown crystalline calcite, soft to dispersive, amorphous to subblocky SANDSTONE: Light grey to yellow brown aggregates, predominantly loose grains, fine to medium, moderately sorted, grading to SILTSTONE in part, subrounded to rounded, moderately siliceous cement, abundant light brown argillaceous matrix, slightly calcareous cement, friable in part, moderately hard, poor to fair inferred porosity, no shows.

Depth From	Depth To	Lithology %	Description
2105	2110	90	SILTSTONE: Olive black to dark brown, arenaceous in part, grading to SANDSTONE in part, non calcareous, common black specks, trace to rare yellowish brown crystalline calcite, soft to dispersive, amorphous to subblocky
		10	SANDSTONE: Light grey to yellow brown aggregates, predominantly loose grains, fine to medium, moderately sorted, grading to SILTSTONE in part, subrounded to rounded, moderately siliceous cement, abundant light brown argillaceous matrix, slightly calcareous cement, friable in part, moderately hard, poor to fair inferred porosity, no shows.
2110	2115	90	SILTSTONE: Olive black to dark brown, arenaceous in part, grading to SANDSTONE in part, non calcareous, trace to common black carbonaceous specks, trace to rare tan to light brown dolomite crystals, soft to dispersive, amorphous to subblocky
		10	SANDSTONE: Light grey to yellow brown aggregates, predominantly loose grains, fine to medium, moderately sorted, grading to SILTSTONE in part, subrounded to rounded, moderately siliceous cement, abundant light brown argillaceous matrix, slightly calcareous cement, friable in part, moderately hard, poor to fair inferred porosity, no shows.
2115	2120	90	SILTSTONE: Olive black to dark brown, arenaceous in part, grading to SANDSTONE in part, non calcareous, trace to common black carbonaceous specks, trace to rare tan to light brown dolomite crystals, soft to dispersive, amorphous to subblocky
		10	SANDSTONE: Light grey to yellow brown aggregates, predominantly loose grains, fine to medium, moderately sorted, grading to SILTSTONE in part, subrounded to rounded, moderately siliceous cement, abundant light brown argillaceous matrix, slightly calcareous cement, friable in part, moderately hard, poor to fair inferred porosity, no shows.
2120	2125	95	SILTSTONE: Olive black to dark brown, arenaceous in part, grading to SANDSTONE in part, non calcareous, trace to common black carbonaceous specks, trace to rare tan to light brown dolomite crystals, soft to dispersive, amorphous to subblocky
		5	SANDSTONE: Light grey to yellow brown aggregates, predominantly loose grains, fine to medium, moderately sorted, grading to SILTSTONE in part, subrounded to rounded, moderately siliceous cement, abundant light brown argillaceous matrix, slightly calcareous cement, friable in part, moderately hard, poor to fair inferred porosity, no shows.

Depth From	Depth To	Lithology %	Description
2125	2130	100	SILTSTONE: Olive black to dark brown, dark grey, arenaceous in part, grading to SANDSTONE in part, non calcareous, trace to common black carbonaceous specks, soft, dispersive, firm in part, amorphous to subblocky
2130	2135	100	SILTSTONE: Olive black to dark brown, dark grey, arenaceous in part, grading to SANDSTONE in part, non calcareous, trace to common black carbonaceous specks, trace yellowish brown to white crystalline calcite, soft, dispersive, firm in part, amorphous to subblocky
2135	2140	100	SILTSTONE: Olive black to dark brown, dark grey, arenaceous in part, grading to SANDSTONE in part, non calcareous, trace to common black carbonaceous specks, trace yellowish brown to white crystalline calcite, soft, dispersive, firm in part, amorphous to subblocky
2140	2145	100	SILTSTONE: Olive black to dark brown, dark grey, arenaceous in part, grading to SANDSTONE in part, non calcareous, trace to common black carbonaceous specks, trace yellowish brown to white crystalline calcite, soft, dispersive, firm in part, amorphous to subblocky
2145	2150	100	SILTSTONE: Olive black to dark brown, dark grey, arenaceous in part, grading to SANDSTONE in part, non calcareous, trace to common black carbonaceous specks, trace yellowish brown to white crystalline calcite, soft, dispersive, firm in part, amorphous to subblocky
2150	2155		No Samples. Changed shaker screens and bypassed collection trays.
2155	2160	100	SILTSTONE: Olive black to dark brown, dark grey, arenaceous in part, grading to SANDSTONE in part, non calcareous, trace to common black carbonaceous specks, trace yellowish brown to white crystalline calcite, soft, dispersive, firm in part, amorphous to subblocky
2160	2165	100	SILTSTONE: Olive black to dark brown, dark grey, arenaceous in part, grading to SANDSTONE in part, non calcareous, trace to common black carbonaceous specks, trace yellowish brown to white crystalline calcite, soft, dispersive, firm in part, amorphous to subblocky
2165	2170	100	SILTSTONE: Olive black to dark brown, dark grey, arenaceous in part, grading to SANDSTONE in part, non calcareous, trace to common black carbonaceous specks, trace yellowish brown to white crystalline calcite, soft, dispersive, firm in part, amorphous to subblocky

Depth From	Depth To	Lithology %	Description
2170	2175	100	SILTSTONE: Olive black to dark brown, dark grey, arenaceous in part, grading to SANDSTONE in part, non calcareous, trace to common black carbonaceous specks, trace yellowish brown to white crystalline calcite, soft, dispersive, firm in part, amorphous to subblocky
2175	2180	100	SILTSTONE: Olive black to dark brown, dark grey, arenaceous in part, grading to SANDSTONE in part, non calcareous, trace to common black carbonaceous specks, trace pyrite, soft, dispersive, firm in part, amorphous to subblocky
2180	2185	100	SILTSTONE: Olive black to dark brown, dark grey, arenaceous in part, grading to SANDSTONE in part, non calcareous, trace to common black carbonaceous specks, trace pyrite, soft, dispersive, firm in part, amorphous to subblocky
2185	2190	100	SILTSTONE: Brown to olive black, dark grey, grading to SANDSTONE in part, firm in part, non calcareous, trace to common black carbonaceous specks, trace pyrite, trace tan to light brown dolomite grains, soft, dispersive, amorphous to subblocky
2190	2195	100	SILTSTONE: Brown to olive black, dark grey, grading to SANDSTONE in part, non calcareous, trace to common black carbonaceous specks, trace pyrite, soft, firm in part, dispersive, amorphous to subblocky
2195	2200	100	SILTSTONE: Brown to olive black, dark grey, grading to SANDSTONE in part, non calcareous, trace to common black carbonaceous specks, trace pyrite, soft, firm in part, dispersive, amorphous to subblocky
2200	2205	100	SILTSTONE: Brown to olive black, dark grey, grading to SANDSTONE in part, non calcareous, trace to common black carbonaceous specks, trace pyrite, soft, firm in part, dispersive, amorphous to subblocky
2205	2210	100	SILTSTONE: Brown to olive black, dark grey, grading to SANDSTONE in part, non calcareous, trace to common black carbonaceous specks, trace disseminated glauconite, trace pyrite, soft, firm in part, dispersive, amorphous to subblocky
2210	2215	100	SILTSTONE: Brown to olive black, dark grey, grading to SANDSTONE in part, non calcareous, trace to common black carbonaceous specks, trace disseminated glauconite, trace pyrite, soft, firm in part, dispersive, amorphous to subblocky

Depth From	Depth To	Lithology %	Description
2215	2220	100	SILTSTONE: Dark brown to dark grey, grading to very fine SANDSTONE in part, non calcareous, trace black carbonaceous specks, trace to common glauconite aggregates, rare to trace pyrite, trace dolomite, soft, dispersive, firm in part, subblocky
2220	2225	90	SILTSTONE: Dark brown to dark grey, grading to very fine SANDSTONE in part, non calcareous, trace black carbonaceous specks, trace to common glauconite aggregates, rare to trace pyrite, trace dolomite, soft, dispersive, firm in part, subblocky
		10	SANDSTONE: Clear-translucent, loose quartz, unconsolidated, coarse to medium, minor very coarse, poor sorted, subangular to subrounded, poor inferred porosity, no shows.
2225	2230	70	SILTSTONE: Dark brown to dark grey, grading to very fine SANDSTONE in part, non calcareous, trace black carbonaceous specks, trace to common glauconite aggregates, rare to trace pyrite, trace dolomite, soft, dispersive, firm in part, subblocky
		30	SANDSTONE: Clear-translucent, loose quartz, unconsolidated, medium to coarse, minor very coarse, poor sorted, subangular to subrounded, poor inferred porosity, no shows.
2230	2235	80	SILTSTONE: Dark brown to dark grey, grading to very fine SANDSTONE in part, non calcareous, trace black carbonaceous specks, trace to common glauconite aggregates, rare to trace pyrite, trace dolomite, soft, dispersive, firm in part, subblocky
		20	SANDSTONE: Clear-translucent, loose quartz, unconsolidated, medium to coarse, minor very coarse, poor sorted, subangular to subrounded, poor inferred porosity, no shows.
2235	2240	95	SILTSTONE: Dark brown to dark grey, grading to very fine SANDSTONE in part, non calcareous, trace black carbonaceous specks, trace to common glauconite aggregates, rare to trace pyrite, trace light brown dolomite grains, soft, dispersive, firm in part, subblocky
		5	SANDSTONE: Clear-translucent, loose quartz, medium to coarse, minor very coarse, poor sorted, subangular to subrounded, trace pyrite, trace to common glauconite, trace glauconite inclusion, poor inferred porosity, no shows., no fluorescence
2240	2245	95	SILTSTONE: Dark brown to dark grey, grading to very fine SANDSTONE in part, non calcareous, trace black carbonaceous specks, trace to common glauconite aggregates, rare to trace pyrite, trace light brown dolomite grains, soft, dispersive, firm in part, subblocky
		5	SANDSTONE: Clear-translucent, loose quartz, medium to coarse, minor very coarse, poor sorted, subangular to subrounded, trace pyrite, trace to common glauconite, trace glauconite inclusion, poor inferred porosity, no shows., no fluorescence

Depth From	Depth To	Lithology %	Description
2245	2250	100	SILTSTONE: Dark grey to light brown, arenaceous in part, commonly grading to very fine SANDSTONE, non calcareous, trace black carbonaceous specks, trace glauconite, trace pyrite, rare to trace light brown hard dolomite grains with trace glauconite inclusion, trace crystalline calcite, soft to firm, dispersive in part, amorphous
2250	2255	100	SILTSTONE: common dark brown to dark grey, arenaceous in part, grading to very fine SANDSTONE commonly, non calcareous, trace glauconite, rare to trace light brown hard dolomite grains with trace glauconite inclusion, trace pyrite, trace crystalline calcite, soft to firm, dispersive in part, amorphous
2255	2260	100	SILTSTONE: common dark brown to dark grey, arenaceous in part, commonly grading to very fine SANDSTONE, non calcareous, trace glauconite, rare to trace light brown hard dolomite grains with trace glauconite inclusion, trace pyrite, trace crystalline calcite, soft to firm, dispersive in part, amorphous
2260	2265	80	SILTSTONE: common dark brown to dark grey, arenaceous in part, commonly grading to very fine SANDSTONE, non calcareous, trace glauconite, rare to trace light brown hard dolomite grains with trace glauconite inclusion, trace pyrite, trace crystalline calcite, soft to firm, dispersive in part, amorphous
		20	SANDSTONE: Clear to translucent, loose quartz, greenish grey in part, medium to coarse grains size, poor sorted, subangular to subrounded, trace weak siliceous cement, trace argillaceous matrix, trace glauconite, rare pyrite nodules, trace dolomite, poor visual porosity, no shows.
2265	2270	70	SILTSTONE: common dark brown to dark grey, arenaceous in part, commonly grading to very fine SANDSTONE, non calcareous, trace glauconite, rare to trace light brown hard dolomite grains with trace glauconite inclusion, trace pyrite, trace crystalline calcite, soft to firm, dispersive in part, amorphous
		30	SANDSTONE: Clear to translucent, loose quartz, greenish grey in part, medium to coarse grains size, poor sorted, subangular to subrounded, trace weak siliceous cement, trace argillaceous matrix, trace glauconite, rare pyrite nodules, trace dolomite, poor visual porosity, no shows.

Depth From	Depth To	Lithology %	Description
2270	2275	80	SILTSTONE: common dark brown to dark grey, arenaceous in part, commonly grading to very fine SANDSTONE, non calcareous, trace glauconite, rare to trace light brown hard dolomite grains with trace glauconite inclusion, trace pyrite, trace crystalline calcite, soft to firm, dispersive in part, amorphous
		20	SANDSTONE: Clear to translucent, loose quartz, greenish grey in part, medium to coarse grains size, poor sorted, subangular to subrounded, trace weak siliceous cement, trace argillaceous matrix, trace glauconite, rare pyrite nodules, trace dolomite, poor visual porosity, no shows.
2275	2280	100	SILTSTONE: Dark grey to light brown, arenaceous in part, commonly grading to very fine SANDSTONE, non calcareous, trace black carbonaceous specks, trace glauconite, trace pyrite, rare to trace light brown hard dolomite grains with trace glauconite inclusion, trace crystalline calcite, soft to firm, dispersive in part, amorphous
2280	2285	100	SILTSTONE: Dark grey to light brown, arenaceous in part, commonly grading to very fine SANDSTONE, non calcareous, trace black carbonaceous specks, trace glauconite, trace pyrite, rare to trace light brown hard dolomite grains with trace glauconite inclusion, trace crystalline calcite, soft to firm, dispersive in part, amorphous
2285	2290	100	SILTSTONE: Dark grey to light brown, arenaceous in part, commonly grading to very fine SANDSTONE, non calcareous, trace black carbonaceous specks, trace glauconite, trace pyrite, rare to trace light brown hard dolomite grains with trace glauconite inclusion, trace crystalline calcite, soft to firm, dispersive in part, amorphous
2290	2295	95	SILTSTONE: Dark grey to light brown, arenaceous in part, commonly grading to very fine SANDSTONE, non calcareous, trace black carbonaceous specks, trace glauconite, trace pyrite, rare to trace light brown hard dolomite grains with trace glauconite inclusion, trace crystalline calcite, soft to firm, dispersive in part, amorphous
		5	SANDSTONE: predominantly aggregates, yellow to brown, medium grey, occasionally clear to translucent loose quartz grains, medium to coarse grains size, poor sorted, subangular to subrounded, trace strong siliceous cement, trace argillaceous matrix, trace glauconite, hard to very hard, poor visual porosity, no shows..

Depth From	Depth To	Lithology %	Description
2295	2300	100	SILTSTONE: Dark grey to light brown, arenaceous in part, commonly grading to very fine SANDSTONE, non calcareous, trace black carbonaceous specks, trace glauconite, trace pyrite, rare to trace light brown hard dolomite grains with trace glauconite inclusion, trace crystalline calcite, soft to firm, dispersive in part, amorphous
2300	2305	100	SILTSTONE: Dark grey to light brown, arenaceous in part, commonly grading to very fine SANDSTONE, non calcareous, trace black carbonaceous specks, trace glauconite, trace pyrite, rare to trace light brown hard dolomite grains with trace glauconite inclusion, trace crystalline calcite, soft to firm, dispersive in part, amorphous
2305	2310	90	SILTSTONE: Dark grey to light brown, arenaceous in part, commonly grading to very fine SANDSTONE, non calcareous, trace black carbonaceous specks, trace glauconite, trace pyrite, rare to trace light brown hard dolomite grains with trace glauconite inclusion, trace crystalline calcite, soft to firm, dispersive in part, amorphous
		10	SANDSTONE: predominantly aggregates, yellow to brown, medium grey, occasionally clear to translucent loose quartz grains, medium to coarse grains size, poor sorted, subangular to subrounded, trace strong siliceous cement, trace calcareous cement, trace argillaceous matrix, trace glauconite, hard to very hard, poor visual porosity, no shows., trace mineral fluorescence
2310	2315	95	SILTSTONE: Dark grey to light brown, arenaceous in part, commonly grading to very fine SANDSTONE, non calcareous, trace black carbonaceous specks, trace glauconite, trace pyrite, rare to trace light brown hard dolomite grains with trace glauconite inclusion, trace crystalline calcite, soft to firm, dispersive in part, amorphous
		5	SANDSTONE: predominantly aggregates, yellow to brown, medium grey, occasionally clear to translucent loose quartz grains, medium to coarse grains size, poor sorted, subangular to subrounded, trace strong siliceous cement, trace argillaceous matrix, trace glauconite, hard to very hard, poor visual porosity, no shows.
2315	2320	100	SILTSTONE: Dark grey to light brown, arenaceous in part, commonly grading to very fine SANDSTONE, non calcareous, trace black carbonaceous specks, trace glauconite, trace pyrite, rare to trace light brown hard dolomite grains with trace glauconite inclusion, trace crystalline calcite, soft to firm, dispersive in part, amorphous

Depth From	Depth To	Lithology %	Description
2320	2325	100	SILTSTONE: Dark grey to light brown, arenaceous in part, non calcareous, trace black carbonaceous specks, trace glauconite, trace pyrite, rare to trace light brown hard dolomite grains with trace glauconite inclusion, trace crystalline calcite, trace fine sand grains, possibly cavings (?), soft to firm, dispersive in part, amorphous
2325	2330	100	SILTSTONE: Dark grey to light brown, arenaceous in part, commonly grading to very fine SANDSTONE, non calcareous, trace black carbonaceous specks, trace glauconite, trace pyrite, rare to trace light brown hard dolomite grains with trace glauconite inclusion, trace crystalline calcite, soft to firm, dispersive in part, amorphous
2330	2335	100	SILTSTONE: Olive grey to brownish grey, argillaceous, grading to CLAYSTONE in part, non calcareous, trace black specks, trace fine sand grains, possibly cavings (?), soft to firm, minor dispersive, amorphous to subblocky
2335	2340	100	SILTSTONE: Olive grey to brownish grey, argillaceous, grading to CLAYSTONE in part, non calcareous, trace black specks, trace fine sand grains, possibly cavings (?), soft to firm, minor dispersive, amorphous to subblocky
2340	2345	100	SILTSTONE: Olive grey to brownish grey, argillaceous, grading to CLAYSTONE in part, non calcareous, trace black specks, trace fine sand grains, possibly cavings (?), soft to firm, minor dispersive, amorphous to subblocky
2345	2350	100	SILTSTONE: Olive grey to brownish grey, argillaceous, grading to CLAYSTONE in part, non calcareous, trace black specks, trace fine sand grains, possibly cavings (?), soft to firm, minor dispersive, amorphous to subblocky
2350	2355	100	SILTSTONE: Olive grey to brownish grey, argillaceous, grading to CLAYSTONE in part, non calcareous, trace black specks, trace fine sand grains, possibly cavings (?), soft to firm, minor dispersive, amorphous to subblocky
2355	2360	100	SILTSTONE: Olive grey to brownish grey, argillaceous, grading to CLAYSTONE in part, non calcareous, trace black specks, trace fine sand grains, possibly cavings (?), soft to firm, minor dispersive, amorphous to subblocky
2360	2365	100	SILTSTONE: Olive grey to brownish grey, argillaceous, grading to CLAYSTONE in part, non calcareous, trace black specks, trace fine sand grains, possibly cavings (?), soft to firm, minor dispersive, amorphous to subblocky

Depth From	Depth To	Lithology %	Description
2365	2370	100	SILTSTONE: Olive grey to brownish grey, argillaceous matrix, grading to CLAYSTONE in part, non calcareous, trace black specks, soft to firm, minor dispersive, amorphous to subblocky
2370	2375	100	SILTSTONE: Olive grey to brownish grey, argillaceous matrix, grading to CLAYSTONE in part, non calcareous, trace black specks, soft to firm, minor dispersive, amorphous to subblocky
2375	2380	100	SILTSTONE: Olive grey to brownish grey, argillaceous matrix, grading to CLAYSTONE in part, non calcareous, trace black specks, soft to firm, minor dispersive, amorphous to subblocky
2380	2385	100	SILTSTONE: Olive grey to brownish grey, argillaceous matrix, grading to CLAYSTONE in part, non calcareous, trace black specks, soft to firm, sticky in part, minor dispersive, amorphous to subblocky
2385	2390	100	SILTSTONE: Olive grey to brownish grey, argillaceous matrix, grading to CLAYSTONE in part, non calcareous, trace black specks, soft to firm, sticky in part, minor dispersive, amorphous to subblocky
2390	2395	100	SILTSTONE: Olive grey to brownish grey, argillaceous matrix, grading to CLAYSTONE in part, non calcareous, trace black specks, soft to firm, sticky in part, minor dispersive, amorphous to subblocky
2395	2400	100	SILTSTONE: Olive grey to brownish grey, argillaceous matrix, grading to CLAYSTONE in part, non calcareous, trace black specks, soft to firm, sticky in part, minor dispersive, amorphous to subblocky
2400	2405	95	SILTSTONE: Olive grey to brownish grey, argillaceous matrix, grading to CLAYSTONE in part, non calcareous, trace black specks, soft to firm, sticky in part, minor dispersive, amorphous to subblocky
		5	SANDSTONE: Translucent to clear quartz grains, predominantly fine to medium grains, moderately sorted, subrounded to rounded, no cement, argillaceous matrix, trace glauconite, poor inferred porosity, no shows.

Depth From	Depth To	Lithology %	Description
2405	2410	85	SILTSTONE: Olive grey to brownish grey, argillaceous matrix, grading to CLAYSTONE in part, non calcareous, trace black specks, soft to firm, sticky in part, minor dispersive, amorphous to subblocky
		15	SANDSTONE: Translucent to clear quartz grains, common yellow brown aggregates, predominantly fine to medium grains, moderately sorted, subrounded to rounded, no cement, argillaceous matrix, trace glauconite, trace calcite grains, hard to friable, poor inferred porosity, no shows., trace mineral fluorescence
2410	2415	85	SILTSTONE: Olive grey to brownish grey, argillaceous matrix, grading to CLAYSTONE in part, non calcareous, trace black specks, soft to firm, sticky in part, minor dispersive, amorphous to subblocky
		15	SANDSTONE: Translucent to clear quartz grains, common yellow brown aggregates, predominantly fine to medium grains, moderately sorted, subrounded to rounded, no cement, argillaceous matrix, trace glauconite, trace calcite grains, hard to friable, poor inferred porosity, no shows., trace mineral fluorescence
2415	2420	90	SILTSTONE: Olive grey to brownish grey, argillaceous matrix, grading to CLAYSTONE in part, non calcareous, trace black specks, soft to firm, sticky in part, minor dispersive, amorphous to subblocky
		10	SANDSTONE: Translucent to clear quartz grains, common yellow brown aggregates, predominantly fine to medium grains, moderately sorted, subrounded to rounded, no cement, argillaceous matrix, trace glauconite, trace calcite grains, hard to friable, poor inferred porosity, no shows.
2420	2425	95	SILTSTONE: Olive grey to brownish grey, argillaceous matrix, grading to CLAYSTONE in part, non calcareous, trace black specks, soft to firm, sticky in part, minor dispersive, amorphous to subblocky
		5	SANDSTONE: Translucent to clear quartz grains, common yellow brown aggregates, predominantly fine to medium grains, moderately sorted, subrounded to rounded, no cement, argillaceous matrix, trace glauconite, trace calcite grains, hard to friable, poor inferred porosity, no shows.
2425	2430	100	SILTSTONE: Olive grey to brownish grey, argillaceous, grading to CLAYSTONE in part, non calcareous, trace fine to medium sand grains, trace black specks, soft to firm, sticky in part, amorphous to subblocky

Depth From	Depth To	Lithology %	Description
2430	2435	95	SILTSTONE: Olive grey to brownish grey, argillaceous matrix, grading to CLAYSTONE in part, non calcareous, trace black specks, soft to firm, sticky in part, minor dispersive, amorphous to subblocky
		5	SANDSTONE: Translucent to clear quartz grains, common yellow brown aggregates, predominantly fine to medium grains, moderately sorted, subrounded to rounded, no cement, argillaceous matrix, trace glauconite, trace calcite grains, hard to friable, poor inferred porosity, no shows.
2435	2440	100	SILTSTONE: Olive grey to brownish grey, argillaceous, grading to CLAYSTONE in part, non calcareous, trace fine to medium sand grains, trace black specks, soft to firm, sticky in part, amorphous to subblocky
2440	2445	85	SILTSTONE: Olive grey to brownish grey, argillaceous, grading to CLAYSTONE in part, non calcareous, trace fine to medium sand grains, trace black specks, soft to firm, sticky in part, amorphous to subblocky
		15	SANDSTONE: Translucent to clear quartz grains, minor yellowish brown aggregates, predominantly fine to medium grains, rare coarse, moderately sorted, subrounded to rounded, trace calcareous cement, trace glauconite, trace calcite grains, hard to friable, poor inferred porosity, no shows.
2445	2450	85	SILTSTONE: Olive grey to brownish grey, argillaceous, grading to CLAYSTONE in part, non calcareous, trace fine to medium sand grains, trace black specks, soft to firm, sticky in part, amorphous to subblocky
		15	SANDSTONE: Translucent to clear quartz grains, minor yellowish brown aggregates, predominantly fine to medium grains, rare coarse, moderately sorted, subrounded to rounded, trace calcareous cement, trace glauconite, trace calcite grains, hard to friable, poor inferred porosity, no shows.
2450	2455	90	SILTSTONE: Olive grey to brownish grey, argillaceous, grading to CLAYSTONE in part, non calcareous, trace fine to medium sand grains, trace black specks, soft to firm, sticky in part, amorphous to subblocky
		10	SANDSTONE: Translucent to clear quartz grains, minor yellowish brown aggregates, predominantly fine to medium grains, rare coarse, moderately sorted, subrounded to rounded, trace calcareous cement, trace glauconite, trace calcite grains, hard to friable, poor inferred porosity, no shows.

Depth From	Depth To	Lithology %	Description
2455	2460	90	SILTSTONE: Olive grey to brownish grey, argillaceous, grading to CLAYSTONE in part, non calcareous, trace fine to medium sand grains, trace black specks, soft to firm, sticky in part, amorphous to subblocky
		10	SANDSTONE: Translucent to clear quartz grains, minor yellowish brown aggregates, predominantly fine to medium grains, rare coarse, moderately sorted, subrounded to rounded, trace calcareous cement, trace glauconite, trace calcite grains, hard to friable, poor inferred porosity, no shows.
2460	2465	90	SILTSTONE: Olive grey to brownish grey, argillaceous, grading to CLAYSTONE in part, non calcareous, trace fine to medium sand grains, trace black specks, soft to firm, sticky in part, amorphous to subblocky
		10	SANDSTONE: Translucent to clear quartz grains, minor yellowish brown aggregates, predominantly fine to medium grains, rare coarse, moderately sorted, subrounded to rounded, trace calcareous cement, trace glauconite, trace calcite grains, hard to friable, poor inferred porosity, no shows.
2465	2470	100	SILTSTONE: Olive grey to brownish grey, common loose silt grains, argillaceous, grading to CLAYSTONE in part, non calcareous, trace very fine sand grains, trace glauconite, soft to firm, sticky in part, amorphous to subblocky
2470	2475	100	SILTSTONE: Olive grey to brownish grey, common loose silt grains, argillaceous, grading to CLAYSTONE in part, non calcareous, trace very fine sand grains, trace glauconite, soft to firm, sticky in part, amorphous to subblocky
2475	2480	100	SILTSTONE: Olive grey to brownish grey, common loose silt grains, argillaceous, grading to CLAYSTONE in part, non calcareous, trace very fine sand grains, trace glauconite, soft to firm, sticky in part, amorphous to subblocky
2480	2485	95	SILTSTONE: Olive grey to brownish grey, common loose silt grains, argillaceous, grading to CLAYSTONE in part, non calcareous, trace very fine sand grains, trace glauconite, soft to firm, sticky in part, amorphous to subblocky
		5	SANDSTONE: dominantly yellowish brown to medium grey aggregates, common fine to medium grains, moderately sorted, subrounded to rounded, common siliceous cement, trace calcareous cement, trace glauconite, trace calcite grains, hard to friable, poor inferred porosity, no shows.
2485	2490	100	SILTSTONE: Olive grey to brownish grey, common loose silt grains, argillaceous, grading to CLAYSTONE in part, grading to SANDSTONE in part, non calcareous, trace very fine sand grains, trace glauconite, trace pyrite, soft to firm, sticky in part, amorphous to subblocky

Depth From	Depth To	Lithology %	Description
2490	2495	95	SILTSTONE: Olive grey to brownish grey, common loose silt grains, argillaceous, grading to CLAYSTONE in part, grading to SANDSTONE in part, non calcareous, trace very fine sand grains, trace glauconite, trace pyrite, soft to firm, sticky in part, amorphous to subblocky
		5	SANDSTONE: dominantly yellowish brown to medium grey aggregates, predominantly very fine to fine, moderately sorted, subrounded to rounded, common siliceous cement, trace calcareous cement, trace glauconite, trace calcite grains, hard to friable, poor inferred porosity, no shows.
2495	2500	95	SILTSTONE: Olive grey to brownish grey, common loose silt grains, argillaceous, grading to CLAYSTONE in part, grading to SANDSTONE in part, non calcareous, trace very fine sand grains, trace glauconite, trace pyrite, soft to firm, sticky in part, amorphous to subblocky
		5	SANDSTONE: dominantly yellowish brown to medium grey aggregates, predominantly very fine to fine, moderately sorted, subrounded to rounded, common siliceous cement, trace calcareous cement, trace glauconite, trace calcite grains, hard to friable, poor inferred porosity, no shows.
2500	2505	100	SILTSTONE: Olive grey to brownish grey, common loose silt grains, argillaceous, grading to CLAYSTONE in part, grading to SANDSTONE in part, non calcareous, trace very fine sand grains, trace glauconite, soft to firm, sticky in part, amorphous to subblocky
2505	2510	100	SILTSTONE: Olive grey to brownish grey, common loose silt grains, argillaceous, grading to CLAYSTONE in part, grading to SANDSTONE in part, non calcareous, trace very fine sand grains, trace glauconite, soft to firm, sticky in part, amorphous to subblocky
2510	2515	100	SILTSTONE: Olive grey to brownish grey, very argillaceous, grading to CLAYSTONE in part, non calcareous, trace very fine sand grains, trace glauconite, rare pyrite, trace black lithic specks, soft to firm, sticky in part, dispersive, amorphous to subblocky
2515	2520	100	SILTSTONE: Olive grey to brownish grey, very argillaceous, grading to CLAYSTONE in part, non calcareous, trace very fine sand grains, trace glauconite, rare pyrite, trace black lithic specks, soft to firm, sticky in part, dispersive, amorphous to subblocky

Depth From	Depth To	Lithology %	Description
2520	2525	100	SILTSTONE: Olive grey to brownish grey, very argillaceous, grading to CLAYSTONE in part, non calcareous, trace very fine sand grains, trace glauconite, rare pyrite, trace black lithic specks, soft to firm, sticky in part, dispersive, amorphous to subblocky
2525	2530	100	SILTSTONE: Olive grey to brownish grey, very argillaceous, grading to CLAYSTONE in part, non calcareous, trace very fine sand grains, trace glauconite, rare pyrite, trace black lithic specks, soft to firm, sticky in part, dispersive, amorphous to subblocky
2530	2535	100	SILTSTONE: Dark brown to brownish grey, very argillaceous, arenaceous in part, grading to CLAYSTONE in part, grading to very fine SANDSTONE in part, non calcareous, trace fine quartz grains, minor micro glauconite, rare pyrite, trace black lithic specks, soft to firm, sticky in part, dispersive, amorphous to subblocky
2535	2540	100	SILTSTONE: Dark brown to brownish grey, very argillaceous, arenaceous in part, grading to CLAYSTONE in part, grading to very fine SANDSTONE in part, non calcareous, trace fine quartz grains, minor micro glauconite, rare pyrite, trace black lithic specks, soft to firm, sticky in part, dispersive, amorphous to subblocky
2540	2545	100	SILTSTONE: Dark brown to brownish grey, very argillaceous, arenaceous in part, grading to CLAYSTONE in part, grading to very fine SANDSTONE in part, non calcareous, trace fine quartz grains, minor micro glauconite, rare pyrite, trace black lithic specks, soft to firm, sticky in part, dispersive, amorphous to subblocky
2545	2550	100	SILTSTONE: Dark brown to brownish grey, very argillaceous, arenaceous in part, grading to CLAYSTONE in part, grading to very fine SANDSTONE in part, non calcareous, trace fine quartz grains, minor micro glauconite, rare pyrite, trace black lithic specks, soft to firm, sticky in part, dispersive, amorphous to subblocky
2550	2553	100	SILTSTONE: Dark brown to brownish grey, very argillaceous, arenaceous in part, grading to CLAYSTONE in part, grading to very fine SANDSTONE in part, non calcareous, trace fine quartz grains, minor micro glauconite, rare pyrite, trace black lithic specks, soft to firm, sticky in part, dispersive, amorphous to subblocky

Depth From	Depth To	Lithology %	Description
2553	2555	100	SILTSTONE: Dark brown to dark grey, very argillaceous, arenaceous in part, grading to CLAYSTONE in part, grading to very fine SANDSTONE in part, non calcareous, trace fine quartz grains, minor micro glauconite, rare to trace pyrite, trace black lithic specks, soft to firm, sticky in part, dispersive, amorphous to subblocky
2555	2560	100	SILTSTONE: Dark brown to dark grey, very argillaceous, arenaceous in part, grading to CLAYSTONE in part, grading to very fine SANDSTONE in part, non calcareous, trace fine quartz grains, minor micro glauconite, rare to trace pyrite, trace black lithic specks, trace light brown dolomite grains, soft to firm, sticky in part, dispersive, amorphous to subblocky
2560	2565	100	SILTSTONE: Dark brown to dark grey, very argillaceous, arenaceous in part, grading to CLAYSTONE in part, grading to very fine SANDSTONE in part, non calcareous, trace fine quartz grains, minor micro glauconite, rare to trace pyrite, trace black lithic specks, trace light brown dolomite grains, soft to firm, sticky in part, dispersive, amorphous to subblocky
2565	2570	100	SILTSTONE: Dark brown to dark grey, very argillaceous, arenaceous in part, grading to CLAYSTONE in part, grading to very fine SANDSTONE in part, non calcareous, trace fine quartz grains, minor micro glauconite, rare to trace pyrite, trace black lithic specks, trace light brown dolomite grains, soft to firm, sticky in part, dispersive, amorphous to subblocky
2570	2575	100	SILTSTONE: Dark brown to dark grey, very argillaceous, arenaceous in part, grading to CLAYSTONE in part, non calcareous, trace fine quartz grains, minor micro glauconite, rare to trace pyrite, trace black lithic specks, soft to firm, sticky in part, dispersive, amorphous to subblocky
2575	2580	100	SILTSTONE: Dark brown to dark grey, very argillaceous, arenaceous in part, grading to CLAYSTONE in part, non calcareous, trace fine quartz grains, minor micro glauconite, trace black lithic specks, soft to firm, sticky in part, dispersive, amorphous to subblocky
2580	2585	100	SILTSTONE: Brown to dark grey, very argillaceous, arenaceous, grading to CLAYSTONE in part, non calcareous, trace very fine quartz grains, minor micro glauconite aggregated, trace black lithic specks, soft to firm, sticky in part, dispersive, amorphous to subblocky
2585	2590	100	SILTSTONE: Brown to dark grey, very argillaceous, arenaceous, grading to CLAYSTONE in part, non calcareous, trace very fine quartz grains, minor micro glauconite aggregated, trace black lithic specks, soft to firm, sticky in part, dispersive, amorphous to subblocky

Depth From	Depth To	Lithology %	Description
2590	2595	100	SILTSTONE: Brown to dark grey, very argillaceous, arenaceous, grading to CLAYSTONE in part, non calcareous, trace very fine quartz grains, minor micro glauconite aggregated, trace to common black lithic specks, soft to firm, sticky in part, dispersive, amorphous to subblocky
2595	2600	100	SILTSTONE: Brown to dark grey, very argillaceous, arenaceous, grading to CLAYSTONE in part, non calcareous, trace very fine quartz grains, minor micro glauconite aggregated, trace to common black lithic specks, soft to firm, sticky in part, dispersive, amorphous to subblocky
2600	2605	100	SILTSTONE: Brown to dark grey, very argillaceous, arenaceous, grading to CLAYSTONE in part, non calcareous, trace very fine quartz grains, minor micro glauconite aggregated, trace to common black lithic specks, soft to firm, sticky in part, dispersive, amorphous to subblocky
2605	2610	100	SILTSTONE: Brown to dark grey, very argillaceous, arenaceous, grading to CLAYSTONE in part, non calcareous, trace very fine quartz grains, minor micro glauconite aggregated, trace to common black lithic specks, soft to firm, sticky in part, dispersive, amorphous to subblocky
2610	2615	100	SILTSTONE: Brown to dark grey, very argillaceous, arenaceous, grading to CLAYSTONE in part, non calcareous, trace very fine quartz grains, minor micro glauconite aggregated, trace to common black lithic specks, soft to firm, sticky in part, dispersive, amorphous to subblocky
2615	2620	100	SILTSTONE: Brown to dark grey, very argillaceous, arenaceous, grading to CLAYSTONE in part, grading to very fine SANDSTONE, non calcareous, trace very fine quartz grains, minor micro glauconite aggregates, trace to common black lithic specks, soft to firm, sticky in part, dispersive, amorphous to subblocky
2620	2625	100	SILTSTONE: Generally dark brown to dark grey, very argillaceous, arenaceous in-part, grading to CLAYSTONE and very fine SANDSTONE in-part, non calcareous, trace very fine quartz grains, minor glauconite aggregates, common black lithic specks, soft to firm, sub-blocky to amorphous
2625	2630	100	SILTSTONE: Generally dark brown to dark grey, very argillaceous, arenaceous in-part, grading to CLAYSTONE and very fine SANDSTONE in-part, non calcareous, trace very fine quartz grains, minor glauconite aggregates, common black lithic specks, soft to firm, sub-blocky to amorphous

Depth From	Depth To	Lithology %	Description
2630	2635	100	SILTSTONE: Olive grey to dark grey, very argillaceous, grading to CLAYSTONE in-part, non calcareous, trace very fine quartz grains, common black lithic specks, soft to firm, sub-blocky to amorphous
2635	2640	100	SILTSTONE: Olive grey to dark grey, very argillaceous, grading to CLAYSTONE in-part, non calcareous, trace very fine quartz grains, common black lithic specks, soft to firm, sub-blocky to amorphous
2640	2645	100	SILTSTONE: Olive grey to dark grey, very argillaceous, grading to CLAYSTONE in-part, non calcareous, trace very fine quartz grains, trace very hard sand aggregates, trace calcite grains, common black lithic specks, soft to firm, sub-blocky to amorphous
2645	2650	100	SILTSTONE: Olive grey to dark grey, very argillaceous, grading to CLAYSTONE in-part, non calcareous, trace very fine quartz grains, trace very hard sand aggregates, trace calcite grains, common black lithic specks, soft to firm, sub-blocky to amorphous
2650	2655	100	SILTSTONE: Olive grey to dark grey, very argillaceous, grading to CLAYSTONE in-part, non calcareous, trace very fine quartz grains, trace very hard sand aggregates, trace calcite grains, trace of Inoceramus fragments, common black lithic specks, soft to firm, sub-blocky to amorphous
2655	2660	100	SILTSTONE: Olive grey to dark grey, very argillaceous, grading to CLAYSTONE in-part, non calcareous, trace very fine quartz grains, trace very hard sand aggregates, trace calcite grains, trace of Inoceramus fragments, common black lithic specks, soft to firm, sub-blocky to amorphous
2660	2665	100	SILTSTONE: Olive grey to dark grey, very argillaceous, grading to CLAYSTONE in part, non calcareous, traces of Inoceramus fragments, common black specks, trace very hard sand aggregates, soft to firm, subblocky to amorphous
2665	2670	100	SILTSTONE: Olive grey to dark grey, very argillaceous, grading to CLAYSTONE in part, arenaceous in-part, non calcareous, traces of Inoceramus fragments, common black specks, trace very hard sand aggregates, soft to firm, subblocky to amorphous
2670	2675	100	SILTSTONE: Olive grey to dark grey, very argillaceous, grading to CLAYSTONE in part, non calcareous, traces of Inoceramus fragments, common black specks, trace very hard sand aggregates, soft to firm, subblocky to amorphous

Depth From	Depth To	Lithology %	Description
2675	2680	100	SILTSTONE: Olive grey to dark grey, very argillaceous, grading to CLAYSTONE in part, non calcareous, traces of Inoceramus fragments, common black specks, trace very hard sand aggregates, soft to firm, subblocky to amorphous
2680	2685	100	SILTSTONE: Olive grey to dark grey, very argillaceous, grading to CLAYSTONE in part, non calcareous, traces of glauconite, common black specks, trace very hard sand aggregates, soft to firm, subblocky to amorphous
2685	2690	100	SILTSTONE: Olive grey to dark grey, very argillaceous, grading to CLAYSTONE in part, non calcareous, traces of glauconite, common black specks, trace very hard sand aggregates, soft to firm, subblocky to amorphous
2690	2695	100	SILTSTONE: Olive grey to dark grey, very argillaceous, grading to CLAYSTONE in part, non calcareous, traces of glauconite, common black specks, soft to firm, subblocky to amorphous
2695	2700	100	SILTSTONE: Olive grey to dark grey, very argillaceous, grading to CLAYSTONE in part, non calcareous, traces of glauconite, common black specks, trace very hard sand aggregates, soft to firm, subblocky to amorphous
2700	2705	100	SILTSTONE: Olive grey to dark grey, very argillaceous, grading to CLAYSTONE in part, non calcareous, traces of glauconite, common black specks, trace very hard sand aggregates, soft to firm, subblocky to amorphous
2705	2710	100	SILTSTONE: Medium grey to grey, minor dark grey, minor brownish grey, argillaceous, slightly arenaceous, trace to localised common carbonaceous specks, trace glauconite, slightly calcareous, soft to firm, occasionally moderately hard, subblocky.
2710	2715	100	SILTSTONE: Medium grey to grey, minor dark grey, minor brownish grey, argillaceous, slightly arenaceous, trace to localised common carbonaceous specks, trace glauconite, slightly calcareous, soft to firm, occasionally moderately hard, subblocky.
2715	2720	100	SILTSTONE: Medium grey to grey, minor dark grey, minor brownish grey, argillaceous, slightly arenaceous, trace to localised common carbonaceous specks, trace glauconite, slightly calcareous, soft to firm, occasionally moderately hard, subblocky.

Depth From	Depth To	Lithology %	Description
2720	2725	100	SILTSTONE: Medium grey to grey, minor dark grey, minor brownish grey, argillaceous, slightly arenaceous, trace to localised common carbonaceous specks, trace glauconite, slightly calcareous, soft to firm, occasionally moderately hard, subblocky.
2725	2730	100	SILTSTONE: Medium grey to grey, minor dark grey, minor brownish grey, argillaceous, slightly arenaceous, trace to localised common carbonaceous specks, trace glauconite, slightly calcareous, soft to firm, occasionally moderately hard, subblocky.
2730	2735	100	SILTSTONE: Medium grey to grey, minor dark grey, minor brownish grey, argillaceous, slightly arenaceous, trace to localised common carbonaceous specks, trace glauconite, slightly to non calcareous, soft to firm, occasionally moderately hard, subblocky
2735	2740	100	SILTSTONE: Medium grey to grey, minor dark grey, minor brownish grey, argillaceous, slightly arenaceous, trace to localised common carbonaceous specks, trace glauconite, slightly to non calcareous, soft to firm, occasionally moderately hard, subblocky.
2740	2745	100	SILTSTONE: Dark grey to medium grey, very argillaceous in part, grading to a CLAYSTONE in part, slightly to non calcareous, traces of glauconite, traces carbonaceous specks, soft to firm, moderately hard to hard in places, subblocky
2745	2750	100	SILTSTONE: Medium grey to grey, minor dark grey, minor brownish grey, argillaceous, slightly arenaceous, trace to localised common carbonaceous specks, trace glauconite, slightly to non calcareous, traces calcite grains, soft to firm, occasionally moderately hard, subblocky, traces of mineral fluorescence
2750	2755	100	SILTSTONE: Medium grey to grey, minor dark grey, minor brownish grey, argillaceous, slightly arenaceous, trace to localised common carbonaceous specks, trace glauconite, slightly to non calcareous, soft to firm, occasionally moderately hard, subblocky
2755	2760	100	SILTSTONE: Medium grey to grey, minor dark grey, minor brownish grey, argillaceous, slightly arenaceous, trace to localised common carbonaceous specks, trace glauconite, rare very hard calcareous sand aggregates, slightly to non calcareous, soft to firm, occasionally moderately hard, subblocky

Depth From	Depth To	Lithology %	Description
2760	2765	100	SILTSTONE: Medium grey to grey, minor dark grey, minor brownish grey, argillaceous, slightly arenaceous, trace to localised common carbonaceous specks, trace glauconite, traces of very hard calcareous sand aggregates, slightly to non calcareous, soft to firm, occasionally moderately hard, subblocky
2765	2770	100	SILTSTONE: Medium grey to grey, minor dark grey, minor brownish grey, argillaceous, slightly arenaceous, trace to localised common carbonaceous specks, trace glauconite, rare very hard calcareous sand aggregates, slightly calcareous, soft to firm, occasionally moderately hard, subblocky
2770	2775	100	SILTSTONE: Medium grey to grey, minor dark grey, minor brownish grey, argillaceous, slightly arenaceous, trace to localised common carbonaceous specks, trace glauconite, rare very hard calcareous sand aggregates, slightly calcareous, soft to firm, occasionally moderately hard, subblocky
2775	2780	100	SILTSTONE: Medium grey to grey, minor dark grey, minor brownish grey, argillaceous, slightly arenaceous, trace to localised common carbonaceous specks, trace glauconite, rare very hard calcareous sand aggregates, slightly calcareous, soft to firm, occasionally moderately hard, subblocky
2780	2785	100	SILTSTONE: Medium grey to grey, minor dark grey, minor brownish grey, argillaceous, slightly arenaceous, trace to localised common carbonaceous specks, trace glauconite, rare very hard calcareous sand aggregates, trace yellowish brown calcite grains, slightly calcareous, soft to firm, occasionally moderately hard, subblocky
2785	2790	100	SILTSTONE: Medium grey to grey, minor dark grey, minor brownish grey, argillaceous, slightly arenaceous, trace to localised common carbonaceous specks, trace glauconite, rare very hard LIMESTONE, rare hard sand aggregates, trace yellowish brown calcite grains, slightly calcareous, soft to firm, occasionally moderately hard, subblocky
2790	2795	100	SILTSTONE: Medium grey to grey, minor dark grey, minor brownish grey, argillaceous, slightly arenaceous, trace to localised common carbonaceous specks, trace glauconite, rare very hard LIMESTONE, rare hard sand aggregates, trace yellowish brown calcite grains, slightly calcareous, soft to firm, occasionally moderately hard, subblocky
2795	2800	100	SILTSTONE: Medium grey to grey, minor dark grey, minor brownish grey, argillaceous, slightly arenaceous, trace to localised common carbonaceous specks, trace glauconite, rare very hard LIMESTONE, trace yellowish brown calcite grains, slightly calcareous, soft to firm, occasionally moderately hard, subblocky

Depth From	Depth To	Lithology %	Description
2800	2805	100	SILTSTONE: Dark grey to olive grey, minor brownish grey, very argillaceous in part, grading to CLAYSTONE in part, non calcareous, trace very hard dark yellowish brown LIMESTONE, rare pyrite overgrowths, soft to firm, moderately hard in part, subblocky, amorphous in part
2805	2810	100	SILTSTONE: Dark grey to olive grey, minor brownish grey, very argillaceous in part, grading to CLAYSTONE in part, non calcareous, trace very hard dark yellowish brown LIMESTONE, soft to firm, moderately hard in part, subblocky, amorphous in part
2810	2815	100	SILTSTONE: Dark grey to olive grey, minor brownish grey, very argillaceous in part, grading to CLAYSTONE in part, non calcareous, trace very hard dark yellowish brown LIMESTONE, soft to firm, moderately hard in part, subblocky, amorphous in part
2815	2820	100	SILTSTONE: Dark grey to olive grey, minor brownish grey, very argillaceous in part, grading to CLAYSTONE in part, non calcareous, trace very hard dark yellowish brown LIMESTONE, soft to firm, moderately hard in part, subblocky, amorphous in part
2820	2825	100	SILTSTONE: Dark grey to olive grey, minor brownish grey, very argillaceous in part, grading to CLAYSTONE in part, non calcareous, trace very hard dark yellowish brown LIMESTONE, trace white calcite grains, soft to firm, moderately hard in part, subblocky, amorphous in part
2825	2830	100	SILTSTONE: Dark grey to olive grey, minor brownish grey, very argillaceous in part, grading to CLAYSTONE in part, non calcareous, trace very hard dark yellowish brown LIMESTONE, soft to firm, moderately hard in part, subblocky, amorphous in part
2830	2835	100	SILTSTONE: Dark grey to olive grey, minor brownish grey, very argillaceous in part, grading to CLAYSTONE in part, non calcareous, trace very hard dark yellowish brown LIMESTONE, soft to firm, moderately hard in part, subblocky, amorphous in part
2835	2840	100	SILTSTONE: Dark grey to olive grey, minor brownish grey, very argillaceous in part, grading to CLAYSTONE in part, non calcareous, trace very hard dark yellowish brown LIMESTONE, soft to firm, moderately hard in part, subblocky, amorphous in part

Depth From	Depth To	Lithology %	Description
2840	2845	100	SILTSTONE: Dark grey to olive grey, minor brownish grey, very argillaceous in part, grading to CLAYSTONE in part, non calcareous, trace to rare very hard dark yellowish brown LIMESTONE, soft to firm, moderately hard in part, subblocky, amorphous in part
2845	2850	100	SILTSTONE: Dark grey to olive grey, minor brownish grey, very argillaceous in part, grading to CLAYSTONE in part, non calcareous, trace to rare very hard dark yellowish brown LIMESTONE, soft to firm, moderately hard in part, subblocky, amorphous in part
2850	2855	100	SILTSTONE: Dark grey to olive grey, minor brownish grey, very argillaceous in part, grading to CLAYSTONE in part, non calcareous, trace to rare very hard dark yellowish brown LIMESTONE, soft to firm, moderately hard in part, subblocky, amorphous in part
2855	2860	100	SILTSTONE: Dark grey to olive grey, minor brownish grey, very argillaceous in part, grading to CLAYSTONE in part, non calcareous, trace to rare very hard dark yellowish brown LIMESTONE, soft to firm, moderately hard in part, subblocky, amorphous in part
2860	2865	100	SILTSTONE: Dark grey to olive grey, minor brownish grey, very argillaceous in part, grading to CLAYSTONE in part, non calcareous, trace to rare very hard dark yellowish brown LIMESTONE, soft to firm, moderately hard in part, subblocky, amorphous in part
2865	2870	100	SILTSTONE: Dark grey to olive grey, minor brownish grey, very argillaceous in part, grading to CLAYSTONE in part, non calcareous, trace to rare very hard dark yellowish brown LIMESTONE, traces glauconite inclusions, soft to firm, moderately hard in part, subblocky, amorphous in part
2870	2875	100	SILTSTONE: Dark grey to olive grey, minor brownish grey, very argillaceous in part, grading to CLAYSTONE in part, non calcareous, rare very hard dark yellowish brown LIMESTONE, traces glauconite inclusions, rare loose coarse quartz grains, soft to firm, moderately hard in part, subblocky, amorphous in part
2875	2880	100	SILTSTONE: Dark grey to olive grey, minor brownish grey, very argillaceous in part, grading to CLAYSTONE in part, non calcareous, rare very hard dark yellowish brown LIMESTONE, soft to firm, moderately hard in part, subblocky, amorphous in part

Depth From	Depth To	Lithology %	Description
2880	2885	100	SILTSTONE: Dark grey to olive grey, minor brownish grey, very argillaceous in part, grading to CLAYSTONE in part, non calcareous, rare very hard dark yellowish brown LIMESTONE, soft to firm, moderately hard in part, subblocky, amorphous in part
2885	2890	100	SILTSTONE: Dark grey to olive grey, minor brownish grey, very argillaceous in part, grading to CLAYSTONE in part, non calcareous, rare very hard dark yellowish brown LIMESTONE, soft to firm, moderately hard in part, subblocky, amorphous in part
2890	2895	100	SILTSTONE: Dark grey to olive grey, minor brownish grey, very argillaceous in part, grading to CLAYSTONE in part, non calcareous, rare very hard dark yellowish brown LIMESTONE, very soft to dispersive, occasionally firm to moderately hard subblocky, amorphous in part
2895	2900	100	SILTSTONE: Dark grey to olive grey, minor brownish grey, very argillaceous in part, grading to CLAYSTONE in part, non calcareous, rare very hard dark yellowish brown LIMESTONE, very soft to dispersive, occasionally firm to moderately hard subblocky, amorphous in part
2900	2905	100	SILTSTONE: Dark grey to olive grey, minor brownish grey, very argillaceous in part, grading to CLAYSTONE in part, non calcareous, rare very hard dark yellowish brown LIMESTONE, very soft to dispersive, occasionally firm to moderately hard subblocky, amorphous in part
2905	2910	100	SILTSTONE: Dark grey to olive grey, minor brownish grey, very argillaceous in part, grading to CLAYSTONE in part, non calcareous, very soft to dispersive, occasionally firm to moderately hard subblocky, amorphous in part
2910	2915	100	SILTSTONE: Dark grey to olive grey, minor brownish grey, very argillaceous in part, grading to CLAYSTONE in part, non calcareous, very soft to dispersive, occasionally firm to moderately hard subblocky, amorphous in part
2915	2920	100	SILTSTONE: Olive grey to dark grey, very argillaceous, grading to CLAYSTONE in part, slightly to non calcareous, traces pyrite nodules, traces pyrite overgrowths, trace Inoceramus fragments, trace very hard yellowish brown LIMESTONE, trace calcite grains, rare glauconite, dispersive in part, subblocky
2920	2925	100	SILTSTONE: Olive grey to dark grey, very argillaceous, grading to CLAYSTONE in part, slightly to non calcareous, trace glauconite inclusions, trace very hard yellowish brown LIMESTONE, trace calcite grains, dispersive in part, subblocky

Depth From	Depth To	Lithology %	Description
2925	2930	100	SILTSTONE: Olive grey to dark grey, very argillaceous, grading to CLAYSTONE in part, slightly to non calcareous, trace glauconite inclusions, trace very hard yellowish brown LIMESTONE, trace calcite grains, dispersive in part, subblocky
2930	2935	100	SILTSTONE: Olive grey to dark grey, very argillaceous, grading to CLAYSTONE in part, slightly to non calcareous, trace glauconite inclusions, trace very hard yellowish brown LIMESTONE, trace calcite grains, dispersive in part, subblocky
2935	2940	100	SILTSTONE: Olive grey to dark grey, very argillaceous, grading to CLAYSTONE in part, slightly to non calcareous, trace glauconite inclusions, trace very hard yellowish brown LIMESTONE, rare calcite grains, dispersive in part, subblocky
2940	2945	100	SILTSTONE: Olive grey to dark grey, very argillaceous, grading to CLAYSTONE in part, slightly to non calcareous, rare glauconite inclusions, trace very hard yellowish brown LIMESTONE, rare calcite grains, dispersive in part, subblocky
2945	2950	100	SILTSTONE: Olive grey to dark grey, very argillaceous, grading to CLAYSTONE in part, slightly to non calcareous, rare glauconite inclusions, trace very hard yellowish brown LIMESTONE, rare calcite grains, dispersive in part, subblocky
2950	2955	100	SILTSTONE: Olive grey to dark grey, very argillaceous, grading to CLAYSTONE in part, slightly to non calcareous, rare glauconite inclusions, trace very hard yellowish brown LIMESTONE, rare calcite grains, dispersive in part, subblocky
2955	2960	100	SILTSTONE: Olive grey to dark grey, minor medium grey, argillaceous, grading to CLAYSTONE in part, non to slightly calcareous, minor black specks, trace calcite grains, trace pyrite, trace glauconite inclusions, soft to firm, minor dispersive, subblocky to blocky
2960	2965	100	SILTSTONE: Olive grey to dark grey, minor medium grey, argillaceous, grading to CLAYSTONE in part, non to slightly calcareous, minor black specks, trace calcite grains, trace pyrite, trace glauconite inclusions, soft to firm, minor dispersive, subblocky to blocky
2965	2970	100	SILTSTONE: Olive grey to dark grey, minor medium grey, argillaceous, grading to CLAYSTONE in part, non to slightly calcareous, minor black specks, trace calcite grains, trace pyrite, trace glauconite inclusions, soft to firm, minor dispersive, subblocky to blocky

Depth From	Depth To	Lithology %	Description
2970	2975	100	SILTSTONE: Olive grey to dark grey, minor medium grey, argillaceous, grading to CLAYSTONE in part, non to slightly calcareous, minor black specks, trace calcite grains, trace pyrite, trace glauconite inclusions, soft to firm, minor dispersive, subblocky to blocky
2975	2980	100	SILTSTONE: Olive grey to dark grey, minor medium grey, argillaceous, grading to CLAYSTONE in part, non calcareous, minor black specks, trace calcite grains, trace very fine loose quartz grains, subrounded to rounded, soft to firm, minor dispersive, subblocky to blocky
2980	2985	100	SILTSTONE: Olive grey to dark grey, minor medium grey, argillaceous, grading to CLAYSTONE in part, non calcareous, minor black specks, trace calcite grains, rare very fine loose quartz grains, subrounded to rounded, soft to firm, minor dispersive, subblocky to blocky
2985	2990	100	SILTSTONE: Olive grey to dark grey, minor medium grey, argillaceous, grading to CLAYSTONE in part, non calcareous, minor black specks, trace calcite grains, soft to firm, minor dispersive, subblocky to blocky
2990	2995	100	SILTSTONE: Olive grey to dark grey, minor medium grey, argillaceous, grading to CLAYSTONE in part, non calcareous, minor black specks, trace calcite grains, rare pyrite overgrowths, soft to firm, minor dispersive, subblocky to blocky
2995	3000	100	SILTSTONE: Olive grey to dark grey, minor medium grey, very argillaceous, grading to CLAYSTONE in part, non calcareous, minor black carbonaceous as minor lamination specks, trace calcite grains, rare glauconite, rare pyrite overgrowths, trace mica, soft to firm, subblocky to blocky
3000	3005	100	SILTSTONE: Olive grey to dark grey, minor medium grey, very argillaceous, grading to CLAYSTONE in part, non calcareous, minor black carbonaceous as minor lamination specks, trace calcite grains, rare glauconite, trace pyrite, trace mica, soft to firm, subblocky to blocky
3005	3010	100	SILTSTONE: grey to brown, medium grey, very argillaceous, grading to CLAYSTONE, non calcareous, minor black carbonaceous, trace calcite grains, rare glauconite, rare pyrite, trace mica, soft to firm, subblocky to blocky
3010	3015	100	SILTSTONE: grey to brown, medium grey, very argillaceous, grading to CLAYSTONE, non calcareous, minor black carbonaceous, trace calcite grains, trace mica, soft to firm, subblocky to blocky

Depth From	Depth To	Lithology %	Description
3015	3020	100	SILTSTONE: Dark grey to brown, medium grey to dark brown in part, very argillaceous, grading to CLAYSTONE, slightly arenaceous, non calcareous, minor black carbonaceous, trace very fine quartz grains, trace calcite grains, rare micro pyrite, rare glauconite, trace mica, soft to firm, subblocky to blocky
3020	3025	100	SILTSTONE: Dark grey to brown, medium grey to dark brown in part, very argillaceous, grading to CLAYSTONE, slightly arenaceous, non calcareous, minor black carbonaceous, trace very fine quartz grains, trace calcite grains, rare micro pyrite, rare glauconite, trace mica, soft to firm, subblocky to blocky
3025	3030	100	SILTSTONE: Dark grey to brown, medium grey to dark brown in part, very argillaceous, grading to CLAYSTONE, slightly arenaceous, non calcareous, minor black carbonaceous, trace very fine quartz grains, trace calcite grains, trace light brown hard dolomite grain, rare micro pyrite, rare glauconite, trace mica, soft to firm, subblocky to blocky
3030	3035	100	SILTSTONE: Dark grey to brown, medium grey to dark brown in part, very argillaceous, grading to CLAYSTONE, slightly arenaceous, non calcareous, minor black carbonaceous, trace very fine quartz grains, trace calcite grains, trace light brown hard dolomite grain, rare micro pyrite, rare glauconite, trace mica, soft to firm, subblocky to blocky
3035	3040	100	SILTSTONE: Light brown to dark grey, dark brown in part, very argillaceous, grading to CLAYSTONE, slightly arenaceous, non calcareous, minor to common black carbonaceous, trace very fine quartz grains, trace calcite grains, trace light brown hard dolomite grain, soft to firm, subblocky to blocky
3040	3045	100	SILTSTONE: Dark grey to brown, medium grey to dark brown in part, very argillaceous, grading to CLAYSTONE, slightly arenaceous, non calcareous, minor black carbonaceous, trace very fine quartz grains, trace calcite grains, trace light brown hard dolomite grain, rare micro pyrite, rare glauconite, trace mica, soft to firm, subblocky to blocky
3045	3050	100	SILTSTONE: Dark grey to brown, medium grey to dark brown in part, very argillaceous, grading to CLAYSTONE, slightly arenaceous, non calcareous, minor black carbonaceous, trace very fine quartz grains, trace calcite grains, trace light brown hard dolomite grain, trace mica, soft to firm, subblocky to blocky

Depth From	Depth To	Lithology %	Description
3050	3055	100	SILTSTONE: Dark grey to brown, medium grey to dark brown in part, very argillaceous, grading to CLAYSTONE, slightly arenaceous, non calcareous, minor black carbonaceous, trace very fine quartz grains, trace calcite grains, trace light brown hard dolomite grain, rare micro pyrite, rare glauconite, trace mica, soft to firm, subblocky to blocky
3055	3060	100	SILTSTONE: Dark grey to brown, medium grey to dark brown in part, very argillaceous, grading to CLAYSTONE, slightly arenaceous, non calcareous, minor black carbonaceous, trace very fine quartz grains, trace calcite grains, trace light brown hard dolomite grain, rare micro pyrite, rare glauconite, trace mica, soft to firm, subblocky to blocky
3060	3065	100	SILTSTONE: Dark brown to dark grey, very argillaceous, grading to CLAYSTONE, arenaceous, non calcareous, common black carbonaceous specks, trace very fine quartz grains, trace calcite grains, rare micro pyrite, rare glauconite, soft to firm, subblocky
3065	3070	100	SILTSTONE: Dark brown to dark grey, very argillaceous, grading to CLAYSTONE, arenaceous, non calcareous, common black carbonaceous specks, trace very fine quartz grains, trace calcite grains, rare micro pyrite, rare glauconite, soft to firm, subblocky
3070	3075	100	SILTSTONE: Dark brown to dark grey, very argillaceous, grading to CLAYSTONE, arenaceous, non calcareous, common black carbonaceous specks, trace very fine quartz grains, trace calcite grains, rare micro pyrite, rare glauconite, soft to firm, subblocky
3075	3080	100	SILTSTONE: Dark brown to dark grey, very argillaceous, grading to CLAYSTONE, arenaceous, non calcareous, common black carbonaceous specks, trace very fine quartz grains, trace calcite grains, rare micro pyrite, rare glauconite, soft to firm, subblocky
3080	3085	100	SILTSTONE: Dark brown to dark grey, very argillaceous, grading to CLAYSTONE, arenaceous, non calcareous, common black carbonaceous specks, trace very fine quartz grains, trace calcite grains, rare micro pyrite, rare glauconite, soft to firm, subblocky
3085	3090	100	SILTSTONE: Dark brown to dark grey, very argillaceous, grading to CLAYSTONE, arenaceous, non calcareous, common black carbonaceous specks, trace very fine quartz grains, trace calcite grains, rare micro pyrite, rare glauconite, soft to firm, subblocky

Depth From	Depth To	Lithology %	Description
3090	3095	100	SILTSTONE: Dark brown to dark grey, very argillaceous, grading to CLAYSTONE, arenaceous, non calcareous, common black carbonaceous specks, trace very fine quartz grains, trace calcite grains, rare micro pyrite, rare glauconite, soft to firm, subblocky
3095	3100	100	SILTSTONE: Dark brown to dark grey, very argillaceous, grading to CLAYSTONE, arenaceous, non calcareous, common black carbonaceous specks, trace very fine quartz grains, trace calcite grains, rare micro pyrite, rare glauconite, soft to firm, subblocky
3100	3105	100	SILTSTONE: Dark brown to dark grey, very argillaceous, grading to CLAYSTONE, arenaceous, non calcareous, common black carbonaceous specks, trace very fine quartz grains, trace calcite grains, trace light brown dolomite grains, rare micro pyrite, rare glauconite, soft to firm, subblocky
3105	3110	100	SILTSTONE: Dark grey to dark brown, very argillaceous, grading to CLAYSTONE in part, arenaceous, non calcareous, common black carbonaceous specks, rare quartz grains, trace calcite grains, trace light brown to very light grey dolomite grains, soft, firm, subblocky
3110	3115	100	SILTSTONE: Dark grey to dark brown, very argillaceous, grading to CLAYSTONE in part, arenaceous, non calcareous, common black carbonaceous specks, rare quartz grains, trace calcite grains, trace light brown to very light grey dolomite grains, soft, firm, subblocky
3115	3120	100	SILTSTONE: Dark grey to dark brown, very argillaceous, grading to very fine SANDSTONE in part, arenaceous, non calcareous, common black carbonaceous specks, rare quartz grains, trace calcite grains, trace light brown to very light grey dolomite grains, soft, firm, subblocky
3120	3125	100	SILTSTONE: Generally dark grey to dark brown, very argillaceous, grading to very fine SANDSTONE in part, very arenaceous in part, non calcareous, common black carbonaceous specks, rare quartz grains, trace calcite grains, trace light brown to very light grey dolomite grains, soft, firm, subblocky

Depth From	Depth To	Lithology %	Description
3125	3130	95	SILTSTONE: Dark grey to dark brown, very argillaceous, grading to very fine SANDSTONE in part, very arenaceous in part, non calcareous, common black carbonaceous specks, rare quartz grains, trace white to very light grey LIMESTONE grains, trace light brown to very light grey dolomite grains, soft, firm, subblocky
		5	SANDSTONE: Light grey to very light grey, very fine grains, well sorting, subrounded, strong siliceous cement, trace white argillaceous matrix, trace lithic fragments, moderate hard to hard, poor visual porosity, no shows.
3130	3135	95	SILTSTONE: Generally dark grey to dark brown, rare black, very argillaceous, grading to very fine SANDSTONE in part, very arenaceous in part, non calcareous, common black carbonaceous specks, rare quartz grains, trace white to very light grey LIMESTONE grains, trace light brown to very light grey dolomite grains, soft, firm, subblocky
		5	SANDSTONE: Light grey to very light grey, very fine grains, well sorting, subrounded, strong siliceous cement, trace white argillaceous matrix, trace lithic fragments, moderate hard to hard, poor visual porosity, no shows.
3135	3140	95	SILTSTONE: Dark grey to dark brown, rare black, very argillaceous, grading to CLAYSTONE in part, arenaceous in part, slightly calcareous, common black carbonaceous specks, rare quartz grains, trace white to very light grey LIMESTONE grains, trace light brown dolomite grains, trace mica, rare micro glauconite, soft, very firm, subblocky
		5	SANDSTONE: Light grey to very light grey, very fine grains, well sorted, subrounded, grading to arenaceous SILTSTONE, strong siliceous cement, trace white argillaceous matrix, trace lithic fragments, moderate hard to hard, poor visual porosity, no shows.
3140	3145	95	SILTSTONE: Dark grey to dark brown, rare black, very argillaceous, grading to CLAYSTONE in part, arenaceous in part, slightly calcareous, common black carbonaceous specks, rare quartz grains, trace white to very light grey calcareous grains, trace light brown dolomite grains, trace mica, rare micro glauconite, soft, very firm, subblocky
		5	SANDSTONE: Light grey to very light grey, very fine grains, well sorted, subrounded, grading to arenaceous SILTSTONE, strong siliceous cement, trace white argillaceous matrix, trace lithic fragments, moderate hard to hard, poor visual porosity, no shows.

Depth From	Depth To	Lithology %	Description
3145	3150	95	SILTSTONE: Dark grey to dark brown, rare black, very argillaceous, grading to CLAYSTONE in part, arenaceous in part, slightly calcareous, common black carbonaceous specks, rare quartz grains, trace white to very light grey calcareous grains, trace light brown dolomite grains, trace mica, rare micro glauconite, soft, very firm, subblocky
		5	SANDSTONE: Light grey to very light grey, very fine grains, well sorted, subrounded, grading to arenaceous SILTSTONE, strong siliceous cement, trace white argillaceous matrix, trace lithic fragments, moderate hard to hard, poor visual porosity, no shows.
3150	3153	95	SILTSTONE: Dark grey to dark brown, rare black, very argillaceous, grading to CLAYSTONE in part, arenaceous in part, slightly calcareous, common black carbonaceous specks, rare quartz grains, trace white to very light grey calcareous grains, trace light brown dolomite grains, trace mica, rare micro glauconite, soft, very firm, subblocky
		5	SANDSTONE: Light grey to very light grey, very fine grains, well sorted, subrounded, grading to arenaceous SILTSTONE, strong siliceous cement, trace white argillaceous matrix, trace lithic fragments, moderate hard to hard, poor visual porosity, no shows.
3153	3156	95	SILTSTONE: Dark grey to dark brown, rare black, very argillaceous, grading to CLAYSTONE in part, arenaceous in part, slightly calcareous, common black carbonaceous specks, rare quartz grains, trace white to very light grey calcareous grains, trace light brown dolomite grains, trace mica, rare micro glauconite, soft, very firm, subblocky
		5	SANDSTONE: Light grey to very light grey, very fine grains, well sorted, subrounded, grading to arenaceous SILTSTONE, strong siliceous cement, trace white argillaceous matrix, trace lithic fragments, moderate hard to hard, poor visual porosity, no shows.
3156	3159	95	SILTSTONE: Dark grey to dark brown, rare black, very argillaceous, grading to CLAYSTONE in part, arenaceous in part, slightly calcareous, common black carbonaceous specks, rare quartz grains, trace white to very light grey calcareous grains, trace light brown dolomite grains, trace mica, rare micro glauconite, soft, very firm, subblocky
		5	SANDSTONE: Light grey to very light grey, very fine grains, well sorted, subrounded, grading to arenaceous SILTSTONE, strong siliceous cement, trace white argillaceous matrix, trace lithic fragments, moderate hard to hard, poor visual porosity, no shows.

Depth From	Depth To	Lithology %	Description
3159	3162	95	SILTSTONE: Dark grey to dark brown, rare black, very argillaceous, grading to CLAYSTONE in part, arenaceous in part, slightly calcareous, common black carbonaceous specks, rare quartz grains, trace white to very light grey calcareous grains, trace light brown dolomite grains, trace mica, rare micro glauconite, soft, very firm, subblocky
		5	SANDSTONE: Light grey to very light grey, very fine grains, well sorted, subrounded, grading to arenaceous SILTSTONE, strong siliceous cement, trace white argillaceous matrix, trace lithic fragments, moderate hard to hard, poor visual porosity, no shows.
3162	3165	95	SILTSTONE: Dark grey to dark brown, rare black, very argillaceous, grading to CLAYSTONE in part, arenaceous in part, slightly calcareous, common black carbonaceous specks, rare quartz grains, trace white to very light grey calcareous grains, trace light brown dolomite grains, trace mica, rare micro glauconite, soft, very firm, subblocky
		5	SANDSTONE: Light grey to very light grey, very fine grains, well sorted, subrounded, grading to arenaceous SILTSTONE, strong siliceous cement, trace white argillaceous matrix, trace lithic fragments, moderate hard to hard, poor visual porosity, no shows.
3165	3168	95	SILTSTONE: Dark grey to dark brown, rare black, very argillaceous, grading to CLAYSTONE in part, arenaceous in part, slightly calcareous, common black carbonaceous specks, rare coarse quartz grains, trace white to very light grey calcareous grains, trace light brown dolomite grains, trace mica, rare micro glauconite, soft, very firm, subblocky
		5	SANDSTONE: Light grey to very light grey, very fine grains, well sorted, subrounded, grading to arenaceous SILTSTONE, strong siliceous cement, trace white argillaceous matrix, trace pyrite overgrowths, trace lithic fragments, moderate hard to hard, poor visual porosity, no shows.
3168	3171	95	SILTSTONE: Dark grey to dark brown, rare black, very argillaceous, grading to CLAYSTONE in part, arenaceous in part, slightly calcareous, common black carbonaceous specks, rare quartz grains, trace white to very light grey calcareous grains, trace light brown dolomite grains, trace mica, rare micro glauconite, soft, very firm, subblocky
		5	SANDSTONE: Light grey to very light grey, very fine grains, well sorted, subrounded, grading to arenaceous SILTSTONE, strong siliceous cement, trace white argillaceous matrix, trace lithic fragments, moderate hard to hard, poor visual porosity, no shows.

Depth From	Depth To	Lithology %	Description
3171	3174	95	SILTSTONE: Dark grey to dark brown, rare black, very argillaceous, grading to CLAYSTONE in part, arenaceous in part, slightly calcareous, common black carbonaceous specks, rare quartz grains, trace white to very light grey calcareous grains, trace light brown dolomite grains, trace mica, rare micro glauconite, soft, very firm, subblocky
		5	SANDSTONE: Light grey to very light grey, very fine grains, well sorted, subrounded, grading to arenaceous SILTSTONE, strong siliceous cement, trace white argillaceous matrix, trace lithic fragments, moderate hard to hard, poor visual porosity, no shows.
3174	3177	100	SILTSTONE: Dark grey to dark brown, rare black, very argillaceous, grading to CLAYSTONE in part, arenaceous in part, slightly calcareous, common black carbonaceous specks, rare quartz grains, trace white to very light grey calcareous grains, trace light brown dolomite grains, trace mica, rare micro glauconite, soft, very firm, subblocky
		trace	SANDSTONE: Light grey to very light grey, very fine grains, well sorted, subrounded, grading to arenaceous SILTSTONE, strong siliceous cement, trace white argillaceous matrix, trace lithic fragments, moderate hard to hard, poor visual porosity, no shows.
3177	3180	100	SILTSTONE: Dark grey to dark brown, rare black, very argillaceous, grading to CLAYSTONE in part, arenaceous in part, slightly calcareous, common black carbonaceous specks, rare quartz grains, trace white to very light grey calcareous grains, trace light brown dolomite grains, trace mica, rare micro glauconite, soft, very firm, subblocky
		trace	SANDSTONE: Light grey to very light grey, very fine grains, well sorted, subrounded, grading to arenaceous SILTSTONE, strong siliceous cement, trace white argillaceous matrix, trace lithic fragments, moderate hard to hard, poor visual porosity, no shows.
3180	3183	90	SILTSTONE: Dark grey to dark brown, rare black, very argillaceous, grading to CLAYSTONE in part, arenaceous in part, slightly calcareous, common black carbonaceous specks, rare quartz grains, trace white to very light grey calcareous grains, trace light brown dolomite grains, trace mica, rare micro glauconite, soft, very firm, subblocky
		10	SANDSTONE: Medium grey to brownish grey, very fine, well sorted, subangular to subrounded, common siliceous cement, common light grey argillaceous matrix, common carbonaceous specks, trace micro mica, moderately hard to hard, poor visual porosity, no shows.

Depth From	Depth To	Lithology %	Description
3183	3186	90	SILTSTONE: Dark grey to dark brown, rare black, very argillaceous, grading to CLAYSTONE in part, arenaceous in part, slightly calcareous, common black carbonaceous specks, rare quartz grains, trace white to very light grey calcareous grains, trace light brown dolomite grains, trace mica, rare micro glauconite, soft, very firm, subblocky
		10	SANDSTONE: Medium grey to brownish grey, very fine, well sorted, subangular to subrounded, common siliceous cement, common light grey argillaceous matrix, common carbonaceous specks, trace micro mica, moderately hard to hard, poor visual porosity, no shows.
3186	3189	95	SILTSTONE: Dark grey to dark brown, rare black, very argillaceous, grading to CLAYSTONE in part, arenaceous in part, slightly calcareous, common black carbonaceous specks, rare quartz grains, trace white to very light grey calcareous grains, trace light brown dolomite grains, trace mica, rare micro glauconite, soft, very firm, subblocky
		5	SANDSTONE: Medium grey to brownish grey, very fine, well sorted, subangular to subrounded, common siliceous cement, common light grey argillaceous matrix, common carbonaceous specks, trace micro mica, moderately hard to hard, poor visual porosity, no shows.
3189	3192	90	SILTSTONE: grey to medium grey, occasional dark grey, brownish grey in part, argillaceous, slightly arenaceous, grading to very fine SANDSTONE, common carbonaceous specks and micro laminations, trace calcite grains, firm to moderately hard, subblocky
		10	SANDSTONE: Medium grey to brownish grey, very fine, well sorted, subangular to subrounded, common siliceous cement, common light grey argillaceous matrix, common carbonaceous specks, trace micro mica, moderately hard to hard, poor visual porosity, no shows.
3192	3195	90	SILTSTONE: grey to medium grey, occasional dark grey, brownish grey in part, argillaceous, slightly arenaceous, grading to very fine SANDSTONE, common carbonaceous specks and micro laminations, trace calcite grains, firm to moderately hard, subblocky
		10	SANDSTONE: Medium grey to brownish grey, very fine, well sorted, subangular to subrounded, common siliceous cement, common light grey argillaceous matrix, common carbonaceous specks, trace micro mica, moderately hard to hard, poor visual porosity, no shows.

Depth From	Depth To	Lithology %	Description
3195	3198	95	SILTSTONE: grey to medium grey, occasional dark grey, brownish grey in part, argillaceous, slightly arenaceous, grading to very fine SANDSTONE, common carbonaceous specks and micro laminations, trace calcite grains, firm to moderately hard, subblocky
		5	SANDSTONE: Medium grey to brownish grey, very fine, well sorted, subangular to subrounded, common siliceous cement, common light grey argillaceous matrix, common carbonaceous specks, trace micro mica, moderately hard to hard, poor visual porosity, no shows.
3198	3201	95	SILTSTONE: grey to medium grey, occasional dark grey, brownish grey in part, argillaceous, slightly arenaceous, grading to very fine SANDSTONE, rare pyrite, common carbonaceous specks and micro laminations, trace calcite grains, firm to moderately hard, subblocky
		5	SANDSTONE: Medium grey to brownish grey, very fine, well sorted, subangular to subrounded, common siliceous cement, common light grey argillaceous matrix, common carbonaceous specks, trace micro mica, moderately hard to hard, poor visual porosity, no shows.
3201	3204	95	SILTSTONE: grey to medium grey, occasional dark grey, brownish grey in part, argillaceous, slightly arenaceous, grading to very fine SANDSTONE, trace coarse to very coarse loose quartz grains, common carbonaceous specks and micro laminations, trace calcite grains, firm to moderately hard, subblocky
		5	SANDSTONE: Medium grey to brownish grey, very fine, well sorted, subangular to subrounded, common siliceous cement, common light grey argillaceous matrix, common carbonaceous specks, trace micro mica, moderately hard to hard, poor visual porosity, no shows.
3204	3207	95	SILTSTONE: grey to medium grey, occasional dark grey, brownish grey in part, argillaceous, slightly arenaceous, grading to very fine SANDSTONE, trace coarse to very coarse loose quartz grains, common carbonaceous specks and micro laminations, trace calcite grains, firm to moderately hard, subblocky
		5	SANDSTONE: Medium grey to brownish grey, very fine, well sorted, subangular to subrounded, common siliceous cement, common light grey argillaceous matrix, common carbonaceous specks, trace micro mica, moderately hard to hard, poor visual porosity, no shows.

Depth From	Depth To	Lithology %	Description
3207	3210	100	SILTSTONE: grey to medium grey, occasional dark grey, brownish grey in part, argillaceous, slightly arenaceous, grading to very fine SANDSTONE, trace coarse to very coarse loose quartz grains, rare Inoceramus fragments, common carbonaceous specks and micro laminations, trace calcite grains, firm to moderately hard, subblocky
3210	3213	100	SILTSTONE: grey to medium grey, occasional dark grey, brownish grey in part, argillaceous, slightly arenaceous, grading to very fine SANDSTONE, trace coarse to very coarse loose quartz grains, common carbonaceous specks and micro laminations, trace calcite grains, firm to moderately hard, subblocky
3213	3216	95	SILTSTONE: grey to medium grey, occasional dark grey, brownish grey in part, argillaceous, slightly arenaceous, grading to very fine SANDSTONE, rare pyrite overgrowths, trace coarse to very coarse loose quartz grains, common carbonaceous specks and micro laminations, trace calcite grains, firm to moderately hard, subblocky
		5	SANDSTONE: Medium grey to olive grey, very fine, well sorted, subangular to subrounded, common siliceous cement, trace strong calcareous cement, common light grey argillaceous matrix, common carbonaceous specks, moderately hard to hard, poor visual porosity, no shows.
3216	3219	95	SILTSTONE: grey to medium grey, occasional dark grey, brownish grey in part, argillaceous, slightly arenaceous, grading to very fine SANDSTONE, trace glauconite inclusions, trace coarse to very coarse loose quartz grains, common carbonaceous specks and micro laminations, trace calcite grains, firm to moderately hard, subblocky
		5	SANDSTONE: Medium grey to olive grey, very fine, well sorted, subangular to subrounded, common siliceous cement, trace strong calcareous cement, common light grey argillaceous matrix, common carbonaceous specks, rare pyrite overgrowths, moderately hard to hard, poor visual porosity, no shows.
3219	3222	95	SILTSTONE: grey to medium grey, occasional dark grey, brownish grey in part, argillaceous, slightly arenaceous, grading to very fine SANDSTONE, trace glauconite inclusions, trace coarse to very coarse loose quartz grains, common carbonaceous specks and micro laminations, trace calcite grains, firm to moderately hard, subblocky
		5	SANDSTONE: Medium grey to olive grey, very fine, well sorted, subangular to subrounded, common siliceous cement, trace strong calcareous cement, common light grey argillaceous matrix, common carbonaceous specks, moderately hard to hard, poor visual porosity, no shows.

Depth From	Depth To	Lithology %	Description
3222	3225	95	SILTSTONE: grey to medium grey, occasional dark grey, brownish grey in part, argillaceous, slightly arenaceous, grading to very fine SANDSTONE, trace glauconite inclusions, trace coarse to very coarse loose quartz grains, common carbonaceous specks and micro laminations, trace calcite grains, firm to moderately hard, subblocky
		5	SANDSTONE: Medium grey to olive grey, very fine, well sorted, subangular to subrounded, common siliceous cement, common light grey argillaceous matrix, common carbonaceous specks, moderately hard to hard, poor visual porosity, no shows.
3225	3228	95	SILTSTONE: grey to medium grey, occasional dark grey, brownish grey in part, argillaceous, slightly arenaceous, grading to very fine SANDSTONE, trace glauconite inclusions, trace coarse to very coarse loose quartz grains, common carbonaceous specks and micro laminations, trace calcite grains, firm to moderately hard, subblocky
		5	SANDSTONE: Medium grey to olive grey, very fine, well sorted, subangular to subrounded, common siliceous cement, common light grey argillaceous matrix, common carbonaceous specks, moderately hard to hard, poor visual porosity, no shows.
3228	3231	100	SILTSTONE: Medium grey to dark grey, minor brownish grey, argillaceous in part, slightly arenaceous, grading to very fine SANDSTONE, non calcareous, common carbonaceous specks and micro laminations, trace yellow dolomite, trace very hard light grey sand aggregates, rare pyrite, firm to moderately hard, subblocky
3231	3234	100	SILTSTONE: Medium grey to dark grey, minor brownish grey, argillaceous in part, slightly arenaceous, grading to very fine SANDSTONE, non calcareous, common carbonaceous specks and micro laminations, trace yellow dolomite, trace very hard light grey sand aggregates, rare pyrite, firm to moderately hard, subblocky
3234	3237	95	SILTSTONE: Medium grey to dark grey, minor brownish grey, argillaceous in part, slightly arenaceous, grading to very fine SANDSTONE, non calcareous, common carbonaceous specks and micro laminations, trace yellow dolomite, trace very hard light grey sand aggregates, trace glauconite, rare pyrite, firm to moderately hard, subblocky
		5	SANDSTONE: Medium grey to olive grey, very fine, well sorted, subangular to subrounded, common siliceous cement, common light grey argillaceous matrix, common carbonaceous specks, moderately hard to hard, poor visual porosity, no shows.

Depth From	Depth To	Lithology %	Description
3237	3240	100	SILTSTONE: Medium grey to dark grey, minor brownish grey, argillaceous in part, slightly arenaceous, grading to very fine SANDSTONE, non calcareous, common carbonaceous specks and micro laminations, trace yellow dolomite, trace very hard light grey sand aggregates, rare pyrite, firm to moderately hard, subblocky
3240	3243	100	SILTSTONE: Medium grey to dark grey, minor brownish grey, argillaceous in part, slightly arenaceous, grading to very fine SANDSTONE, non calcareous, common carbonaceous specks and micro laminations, trace yellow dolomite, trace very hard light grey sand aggregates, firm to moderately hard, subblocky
3243	3246	100	SILTSTONE: Medium grey to dark grey, minor brownish grey, argillaceous in part, slightly arenaceous, grading to very fine SANDSTONE, non calcareous, common carbonaceous specks and micro laminations, trace yellow dolomite, trace very hard light grey sand aggregates, firm to moderately hard, subblocky
3246	3249	100	SILTSTONE: Medium grey to dark grey, minor brownish grey, argillaceous in part, slightly arenaceous, grading to very fine SANDSTONE, non calcareous, common carbonaceous specks and micro laminations, trace yellow dolomite, trace very hard light grey sand aggregates, firm to moderately hard, subblocky
3249	3252	100	SILTSTONE: Medium grey to dark grey, minor brownish grey, very argillaceous in part, slightly arenaceous, grading to very fine SANDSTONE, non calcareous, common carbonaceous specks and micro laminations, trace yellow dolomite, trace very hard light grey sand aggregates, firm to moderately hard, subblocky
3252	3255	100	SILTSTONE: Medium grey to dark grey, minor brownish grey, argillaceous in part, slightly arenaceous, grading to very fine SANDSTONE, non calcareous, common carbonaceous specks and micro laminations, trace yellow dolomite, trace very hard light grey sand aggregates, firm to moderately hard, subblocky
3255	3258	95	SILTSTONE: Medium grey to dark grey, minor brownish grey, argillaceous in part, slightly arenaceous, grading to very fine SANDSTONE, rare coarse to very coarse loose quartz grains, non calcareous, common carbonaceous specks and micro laminations, trace yellow dolomite, trace very hard light grey sand aggregates, firm to moderately hard, subblocky
		5	SANDSTONE: Medium grey to olive grey, very fine, well sorted, subangular to subrounded, common siliceous cement, common light grey argillaceous matrix, common carbonaceous specks, moderately hard to hard, poor visual porosity, no shows.

Depth From	Depth To	Lithology %	Description
3258	3261	95	SILTSTONE: Medium grey to dark grey, minor brownish grey, argillaceous in part, very arenaceous, grading to very fine SANDSTONE, trace coarse to very coarse loose quartz grains, non calcareous, common carbonaceous specks and micro laminations, trace yellow dolomite, trace very hard light grey sand aggregates, firm to moderately hard, subblocky
		5	SANDSTONE: Medium grey to olive grey, very fine, well sorted, subangular to subrounded, silty, grading to SILTSTONE, common siliceous cement, common light grey argillaceous matrix, common carbonaceous specks, moderately hard to hard, poor visual porosity, no shows.
3261	3264	95	SILTSTONE: Medium grey to dark grey, minor brownish grey, argillaceous in part, very arenaceous, grading to very fine SANDSTONE, trace coarse to very coarse loose quartz grains, non calcareous, common carbonaceous specks and micro laminations, trace yellow dolomite, trace very hard light grey sand aggregates, firm to moderately hard, subblocky
		5	SANDSTONE: Medium grey to olive grey, very fine, well sorted, subangular to subrounded, silty, grading to SILTSTONE, common siliceous cement, common light grey argillaceous matrix, common carbonaceous specks, moderately hard to hard, poor visual porosity, no shows.
3264	3267	95	SILTSTONE: Medium grey to dark grey, minor brownish grey, argillaceous in part, very arenaceous, grading to very fine SANDSTONE, trace coarse to very coarse loose quartz grains, non calcareous, common carbonaceous specks and micro laminations, trace yellow dolomite, trace very hard light grey sand aggregates, firm to moderately hard, subblocky
		5	SANDSTONE: Medium grey to olive grey, very fine, well sorted, subangular to subrounded, silty, grading to SILTSTONE, common siliceous cement, common light grey argillaceous matrix, common carbonaceous specks, moderately hard to hard, poor visual porosity, no shows.
3267	3270	95	SILTSTONE: Medium grey to dark grey, minor brownish grey, argillaceous in part, very arenaceous, grading to very fine SANDSTONE, trace coarse to very coarse loose quartz grains, trace pyrite, non calcareous, common carbonaceous specks and micro laminations, trace yellow dolomite, trace very hard light grey sand aggregates, firm to moderately hard, subblocky
		5	SANDSTONE: Medium grey to olive grey, very fine, well sorted, subangular to subrounded, silty, grading to SILTSTONE, common siliceous cement, common light grey argillaceous matrix, common carbonaceous specks, moderately hard to hard, poor visual porosity, no shows.

Depth From	Depth To	Lithology %	Description
3270	3273	95	SILTSTONE: Medium grey to dark grey, minor brownish grey, argillaceous in part, very arenaceous, grading to very fine SANDSTONE, trace coarse to very coarse loose quartz grains, non calcareous, common carbonaceous specks and micro laminations, trace yellow dolomite, trace very hard light grey sand aggregates, firm to moderately hard, subblocky
		5	SANDSTONE: Medium grey to olive grey, very fine, well sorted, subangular to subrounded, silty, grading to SILTSTONE, common siliceous cement, common light grey argillaceous matrix, common carbonaceous specks, moderately hard to hard, poor visual porosity, no shows.
3273	3276	95	SILTSTONE: Medium grey to dark grey, minor brownish grey, argillaceous in part, very arenaceous, grading to very fine SANDSTONE, trace coarse to very coarse loose quartz grains, non calcareous, common carbonaceous specks and micro laminations, trace yellow dolomite, trace very hard light grey sand aggregates, firm to moderately hard, subblocky
		5	SANDSTONE: Medium grey to olive grey, very fine, well sorted, subangular to subrounded, silty, grading to SILTSTONE, common siliceous cement, common light grey argillaceous matrix, common carbonaceous specks, moderately hard to hard, poor visual porosity, no shows.
3276	3279	90	SILTSTONE; medium grey to olive grey, minor brownish grey, argillaceous in part, very arenaceous, grading to very fine SANDSTONE, trace black carbonaceous specks and micro laminations, trace glauconite inclusions, firm to moderately hard, dispersive in part, subblocky
		10	SANDSTONE: Medium grey to light grey, very fine, well sorted, subangular to subrounded, silty, grading to SILTSTONE, common siliceous cement, trace stung calcareous cement, common light brown argillaceous matrix, trace carbonaceous specks, trace very coarse loose quartz grains, moderately hard to hard, subblocky, poor inferred porosity, no shows.
3279	3282	90	SILTSTONE; medium grey to olive grey, minor brownish grey, argillaceous in part, very arenaceous, grading to very fine SANDSTONE, trace black carbonaceous specks and micro laminations, trace glauconite inclusions, firm to moderately hard, dispersive in part, subblocky
		10	SANDSTONE: Medium grey to light grey, very fine, well sorted, subangular to subrounded, silty, grading to SILTSTONE, common siliceous cement, trace strong calcareous cement, common light brown argillaceous matrix, trace carbonaceous specks, trace very coarse loose quartz grains, moderately hard to hard, subblocky, poor inferred porosity, no shows.

Depth From	Depth To	Lithology %	Description
3382	3285	90 10	SILTSTONE; medium grey to olive grey, minor brownish grey, argillaceous in part, very arenaceous, grading to very fine SANDSTONE, trace black carbonaceous specks and micro laminations, trace glauconite inclusions, firm to moderately hard, dispersive in part, subblocky SANDSTONE: Medium grey to light grey, very fine, well sorted, subangular to subrounded, silty, grading to SILTSTONE, common siliceous cement, trace strong calcareous cement, common light brown argillaceous matrix, trace carbonaceous specks, trace very coarse loose quartz grains, moderately hard to hard, subblocky, poor inferred porosity, no shows.
3285	3288	85 15	SILTSTONE; medium grey to olive grey, minor brownish grey, argillaceous in part, very arenaceous, grading to very fine SANDSTONE, trace black carbonaceous specks and micro laminations, trace glauconite inclusions, firm to moderately hard, dispersive in part, subblocky SANDSTONE: Medium grey to light grey, very fine, well sorted, subangular to subrounded, silty, grading to SILTSTONE, common siliceous cement, trace strong calcareous cement, common light brown argillaceous matrix, trace carbonaceous specks, trace very coarse loose quartz grains, moderately hard to hard, subblocky, poor inferred porosity, no shows.
3288	3291	90 10	SILTSTONE; medium grey to olive grey, minor brownish grey, argillaceous in part, very arenaceous, grading to very fine SANDSTONE, trace black carbonaceous specks and micro laminations, trace glauconite inclusions, firm to moderately hard, dispersive in part, subblocky SANDSTONE: Medium grey to light grey, very fine, well sorted, subangular to subrounded, silty, grading to SILTSTONE, common siliceous cement, trace strong calcareous cement, common light brown argillaceous matrix, trace carbonaceous specks, trace very coarse loose quartz grains, moderately hard to hard, subblocky, poor inferred porosity, no shows.
3291	3294	70 30	SILTSTONE; medium grey to olive grey, minor brownish grey, argillaceous in part, very arenaceous, grading to very fine SANDSTONE, trace black carbonaceous specks and micro laminations, trace glauconite inclusions, firm to moderately hard, dispersive in part, subblocky SANDSTONE: Medium grey to light grey, very fine, well sorted, subangular to subrounded, silty, grading to SILTSTONE, common siliceous cement, trace strong calcareous cement, common light brown argillaceous matrix, trace carbonaceous specks, trace very coarse loose quartz grains, moderately hard to hard, subblocky, poor inferred porosity, no shows.

Depth From	Depth To	Lithology %	Description
3294	3297	70	SILTSTONE; medium grey to olive grey, minor brownish grey, argillaceous in part, very arenaceous, grading to very fine SANDSTONE, trace black carbonaceous specks and micro laminations, trace glauconite inclusions, firm to moderately hard, dispersive in part, subblocky
		30	SANDSTONE: Medium grey to light grey, very fine, well sorted, subangular to subrounded, silty, grading to SILTSTONE, common siliceous cement, trace strong calcareous cement, common light brown argillaceous matrix, trace carbonaceous specks, trace very coarse loose quartz grains, moderately hard to hard, subblocky, poor inferred porosity, no shows.
3297	3300	80	SILTSTONE; medium grey to olive grey, minor brownish grey, argillaceous in part, very arenaceous, grading to very fine SANDSTONE, trace black carbonaceous specks and micro laminations, trace glauconite inclusions, firm to moderately hard, dispersive in part, subblocky
		20	SANDSTONE: Medium grey to light grey, very fine, well sorted, subangular to subrounded, silty, grading to SILTSTONE, common siliceous cement, trace strong calcareous cement, common light brown argillaceous matrix, trace carbonaceous specks, trace very coarse loose quartz grains, moderately hard to hard, subblocky, poor inferred porosity, no shows.
3300	3303	80	SILTSTONE: Medium grey to olive grey, minor brownish grey, argillaceous in part, very arenaceous, grading to very fine SANDSTONE, trace black carbonaceous specks and micro laminations, trace glauconite inclusions, firm to moderately hard, dispersive in part, subblocky
		20	SANDSTONE: Medium grey to light grey, very fine, well sorted, subangular to subrounded, silty, grading to SILTSTONE, common siliceous cement, trace strong calcareous cement, common light brown argillaceous matrix, trace carbonaceous specks, trace very coarse loose quartz grains, moderately hard to hard, subblocky, poor inferred porosity, no shows.
3303	3306	70	SILTSTONE; medium grey to olive grey, minor brownish grey, argillaceous in part, very arenaceous, grading to very fine SANDSTONE, trace black carbonaceous specks and micro laminations, trace glauconite inclusions, firm to moderately hard, dispersive in part, subblocky
		30	SANDSTONE: Medium grey to light grey, very fine, well sorted, subangular to subrounded, silty, grading to SILTSTONE, common siliceous cement, trace strong calcareous cement, common light brown argillaceous matrix, trace carbonaceous specks, trace very coarse loose quartz grains, moderately hard to hard, subblocky, poor inferred porosity, no shows.

Depth From	Depth To	Lithology %	Description
3306	3309	80	SILTSTONE; medium grey to olive grey, minor brownish grey, argillaceous in part, very arenaceous, grading to very fine SANDSTONE, trace black carbonaceous specks and micro laminations, trace glauconite inclusions, firm to moderately hard, dispersive in part, subblocky
		20	SANDSTONE: Medium grey to light grey, very fine, well sorted, subangular to subrounded, silty, grading to SILTSTONE, common siliceous cement, trace strong calcareous cement, common light brown argillaceous matrix, trace carbonaceous specks, trace very coarse loose quartz grains, moderately hard to hard, subblocky, poor inferred porosity, no shows.
3309	3312	70	SILTSTONE; medium grey to olive grey, minor brownish grey, argillaceous in part, very arenaceous, grading to very fine SANDSTONE, trace black carbonaceous specks and micro laminations, trace glauconite inclusions, firm to moderately hard, dispersive in part, subblocky
		30	SANDSTONE: Medium grey to light grey, very fine, well sorted, subangular to subrounded, silty, grading to SILTSTONE, common siliceous cement, trace strong calcareous cement, common light brown argillaceous matrix, trace carbonaceous specks, trace very coarse loose quartz grains, moderately hard to hard, subblocky, poor inferred porosity, no shows.
3312	3315	90	SILTSTONE; medium grey to olive grey, minor brownish grey, argillaceous in part, very arenaceous, grading to very fine SANDSTONE, trace black carbonaceous specks and micro laminations, trace glauconite inclusions, firm to moderately hard, dispersive in part, subblocky
		10	SANDSTONE: Medium grey to light grey, very fine, well sorted, subangular to subrounded, silty, grading to SILTSTONE, common siliceous cement, trace strong calcareous cement, common light brown argillaceous matrix, trace carbonaceous specks, trace very coarse loose quartz grains, moderately hard to hard, subblocky, poor inferred porosity, no shows.
3315	3318	85	SILTSTONE: Light olive grey to medium grey, argillaceous in part, arenaceous, grading to a very fine SANDSTONE, trace carbonaceous specks and laminations, trace glauconite inclusions, trace micro mica, trace coarse loose quartz grains, soft to firm, minor dispersive, subblocky, minor amorphous
		15	SANDSTONE: Dark grey to medium grey, minor medium light grey, very fine, well sorted, subangular to subrounded, siliceous cement, trace strong calcareous cement, silty matrix, grading to SILTSTONE, trace of calcite grains, trace black carbonaceous specks, firm to hard, poor inferred porosity, no shows.

Depth From	Depth To	Lithology %	Description
3318	3321	85	SILTSTONE: Light olive grey to medium grey, argillaceous in part, arenaceous, grading to a very fine SANDSTONE, trace carbonaceous specks and laminations, trace glauconite inclusions, trace micro mica, trace coarse loose quartz grains, soft to firm, minor dispersive, subblocky, minor amorphous
		15	SANDSTONE: Dark grey to medium grey, minor medium light grey, very fine, well sorted, subangular to subrounded, siliceous cement, trace strong calcareous cement, silty matrix, grading to SILTSTONE, trace of calcite grains, trace black carbonaceous specks, firm to hard, poor inferred porosity, no shows.
3321	3324	90	SILTSTONE: Light olive grey to medium grey, argillaceous in part, arenaceous, grading to a very fine SANDSTONE, trace carbonaceous specks and laminations, trace glauconite inclusions, trace micro mica, trace coarse loose quartz grains, soft to firm, minor dispersive, subblocky, minor amorphous
		10	SANDSTONE: Dark grey to medium grey, minor medium light grey, very fine, well sorted, subangular to subrounded, siliceous cement, trace strong calcareous cement, silty matrix, grading to SILTSTONE, trace of calcite grains, trace black carbonaceous specks, firm to hard, poor inferred porosity, no shows.
3324	3327	90	SILTSTONE: Light olive grey to medium grey, argillaceous in part, arenaceous, grading to a very fine SANDSTONE, trace carbonaceous specks and laminations, trace glauconite inclusions, trace micro mica, trace coarse loose quartz grains, soft to firm, minor dispersive, subblocky, minor amorphous
		10	SANDSTONE: Dark grey to medium grey, minor medium light grey, very fine, well sorted, subangular to subrounded, siliceous cement, trace strong calcareous cement, silty matrix, grading to SILTSTONE, trace of calcite grains, trace black carbonaceous specks, firm to hard, poor inferred porosity, no shows.
3327	3330	85	SILTSTONE: Light olive grey to medium grey, argillaceous in part, arenaceous, grading to a very fine SANDSTONE, trace carbonaceous specks and laminations, trace glauconite inclusions, trace micro mica, trace coarse loose quartz grains, soft to firm, minor dispersive, subblocky, minor amorphous
		15	SANDSTONE: Dark grey to medium grey, minor medium light grey, very fine, well sorted, subangular to subrounded, siliceous cement, trace strong calcareous cement, silty matrix, grading to SILTSTONE, trace of calcite grains, trace black carbonaceous specks, firm to hard, poor inferred porosity, no shows.

Depth From	Depth To	Lithology %	Description
3330	3333	85	SILTSTONE: Light olive grey to medium grey, argillaceous in part, arenaceous, grading to a very fine SANDSTONE, trace carbonaceous specks and laminations, trace glauconite inclusions, trace micro mica, trace coarse loose quartz grains, soft to firm, minor dispersive, subblocky, minor amorphous
		15	SANDSTONE: Dark grey to medium grey, minor medium light grey, very fine, well sorted, subangular to subrounded, siliceous cement, trace strong calcareous cement, silty matrix, grading to SILTSTONE, trace of calcite grains, trace black carbonaceous specks, firm to hard, poor inferred porosity, no shows.
3333	3336	85	SILTSTONE: Light olive grey to medium grey, argillaceous in part, arenaceous, grading to a very fine SANDSTONE, trace carbonaceous specks and laminations, trace glauconite inclusions, trace micro mica, trace coarse loose quartz grains, soft to firm, minor dispersive, subblocky, minor amorphous
		15	SANDSTONE: Dark grey to medium grey, minor medium light grey, very fine, well sorted, subangular to subrounded, siliceous cement, trace strong calcareous cement, silty matrix, grading to SILTSTONE, trace of calcite grains, trace black carbonaceous specks, firm to hard, poor inferred porosity, no shows.
3336	3339	90	SILTSTONE: Light olive grey to medium grey, argillaceous in part, arenaceous, grading to a very fine SANDSTONE, trace carbonaceous specks and laminations, trace glauconite inclusions, trace micro mica, trace coarse loose quartz grains, soft to firm, minor dispersive, subblocky, minor amorphous
		10	SANDSTONE: Dark grey to medium grey, minor medium light grey, very fine, well sorted, subangular to subrounded, siliceous cement, trace strong calcareous cement, silty matrix, grading to SILTSTONE, trace of calcite grains, trace black carbonaceous specks, firm to hard, poor inferred porosity, no shows.
3339	3342	90	SILTSTONE: Light olive grey to medium grey, argillaceous in part, arenaceous, grading to a very fine SANDSTONE, trace carbonaceous specks and laminations, trace glauconite inclusions, trace micro mica, trace coarse loose quartz grains, soft to firm, minor dispersive, subblocky, minor amorphous
		10	SANDSTONE: Dark grey to medium grey, minor medium light grey, very fine, well sorted, subangular to subrounded, siliceous cement, trace strong calcareous cement, silty matrix, grading to SILTSTONE, trace of calcite grains, trace black carbonaceous specks, firm to hard, poor inferred porosity, no shows.

Depth From	Depth To	Lithology %	Description
3342	3345	95	SILTSTONE: Light olive grey to medium grey, argillaceous in part, arenaceous, grading to a very fine SANDSTONE, trace carbonaceous specks and laminations, trace glauconite inclusions, trace micro mica, trace coarse loose quartz grains, soft to firm, minor dispersive, subblocky, minor amorphous
		10	SANDSTONE: Dark grey to medium grey, minor medium light grey, very fine, well sorted, subangular to subrounded, siliceous cement, trace strong calcareous cement, silty matrix, grading to SILTSTONE, trace of calcite grains, trace glauconite, trace black carbonaceous specks, firm to hard, poor inferred porosity, no shows.
3345	3348	90	SILTSTONE: Light olive grey to medium grey, argillaceous in part, arenaceous, grading to a very fine SANDSTONE, trace carbonaceous specks and laminations, trace glauconite inclusions, trace micro mica, trace coarse loose quartz grains, soft to firm, minor dispersive, subblocky, minor amorphous
		10	SANDSTONE: Dark grey to medium grey, minor medium light grey, very fine, well sorted, subangular to subrounded, siliceous cement, trace strong calcareous cement, silty matrix, grading to SILTSTONE, trace of calcite grains, trace glauconite, trace black carbonaceous specks, firm to hard, poor inferred porosity, no shows.
3348	3351	90	SILTSTONE: Light olive grey to medium grey, argillaceous in part, arenaceous, grading to a very fine SANDSTONE, trace carbonaceous specks and laminations, trace glauconite inclusions, trace micro mica, trace coarse loose quartz grains, soft to firm, minor dispersive, subblocky, minor amorphous
		10	SANDSTONE: Dark grey to medium grey, minor medium light grey, very fine, well sorted, subangular to subrounded, siliceous cement, trace strong calcareous cement, silty matrix, grading to SILTSTONE, trace of calcite grains, trace glauconite, trace black carbonaceous specks, firm to hard, poor inferred porosity, no shows.
3351	3354	95	SILTSTONE: Light olive grey to medium grey, argillaceous in part, arenaceous, grading to a very fine SANDSTONE, trace carbonaceous specks and laminations, trace glauconite inclusions, trace micro mica, trace coarse loose quartz grains, soft to firm, minor dispersive, subblocky, minor amorphous
		5	SANDSTONE: Dark grey to medium grey, minor medium light grey, very fine, well sorted, subangular to subrounded, siliceous cement, trace strong calcareous cement, silty matrix, grading to SILTSTONE, trace of calcite grains, trace glauconite, trace black carbonaceous specks, firm to hard, poor inferred porosity, no shows.

Depth From	Depth To	Lithology %	Description
3354	3357	90	SILTSTONE: Light olive grey to medium grey, argillaceous in part, arenaceous, grading to a very fine SANDSTONE, trace carbonaceous specks and laminations, trace glauconite inclusions, trace micro mica, trace coarse loose quartz grains, soft to firm, minor dispersive, subblocky, minor amorphous
		10	SANDSTONE: Dark grey to medium grey, minor medium light grey, very fine, well sorted, subangular to subrounded, siliceous cement, trace strong calcareous cement, silty matrix, grading to SILTSTONE, trace of calcite grains, trace glauconite, trace black carbonaceous specks, firm to hard, poor inferred porosity, no shows.
3357	3360	90	SILTSTONE: Light olive grey to medium grey, argillaceous in part, arenaceous, grading to a very fine SANDSTONE, trace carbonaceous specks and laminations, trace glauconite inclusions, trace micro mica, trace coarse loose quartz grains, soft to firm, minor dispersive, subblocky, minor amorphous
		10	SANDSTONE: Dark grey to medium grey, minor medium light grey, very fine, well sorted, subangular to subrounded, siliceous cement, trace strong calcareous cement, silty matrix, grading to SILTSTONE, trace of calcite grains, trace glauconite, trace black carbonaceous specks, firm to hard, poor inferred porosity, no shows.
3360	3363	90	SILTSTONE: Light olive grey to medium grey, argillaceous in part, arenaceous, grading to a very fine SANDSTONE, trace carbonaceous specks and laminations, trace glauconite inclusions, trace micro mica, trace coarse loose quartz grains, soft to firm, minor dispersive, subblocky, minor amorphous
		10	SANDSTONE: Dark grey to medium grey, minor medium light grey, very fine, well sorted, subangular to subrounded, siliceous cement, trace strong calcareous cement, silty matrix, grading to SILTSTONE, trace of calcite grains, trace glauconite, trace black carbonaceous specks, firm to hard, poor inferred porosity, no shows.
3363	3366	95	SILTSTONE: Light olive grey to medium grey, argillaceous in part, arenaceous, grading to a very fine SANDSTONE, trace carbonaceous specks and laminations, trace glauconite inclusions, trace micro mica, trace coarse loose quartz grains, soft to firm, minor dispersive, subblocky, minor amorphous
		5	SANDSTONE: Dark grey to medium grey, minor medium light grey, very fine, well sorted, subangular to subrounded, siliceous cement, trace strong calcareous cement, silty matrix, grading to SILTSTONE, trace of calcite grains, trace glauconite, trace black carbonaceous specks, firm to hard, poor inferred porosity, no shows.

Depth From	Depth To	Lithology %	Description
3366	3369	100	SILTSTONE: Light olive grey to medium grey, argillaceous in part, arenaceous, grading to a very fine SANDSTONE, trace carbonaceous specks and laminations, trace glauconite inclusions, trace micro mica, trace coarse loose quartz grains, soft to firm, minor dispersive, subblocky, minor amorphous
3369	3372	95	SILTSTONE: Light olive grey to medium grey, argillaceous in part, arenaceous, grading to a very fine SANDSTONE, trace carbonaceous specks and laminations, trace glauconite inclusions, trace micro mica, trace coarse loose quartz grains, soft to firm, minor dispersive, subblocky, minor amorphous
		5	SANDSTONE: Dark grey to medium grey, minor medium light grey, very fine, well sorted, subangular to subrounded, siliceous cement, trace strong calcareous cement, silty matrix, grading to SILTSTONE, trace of calcite grains, trace glauconite, trace black carbonaceous specks, firm to hard, poor inferred porosity, no shows.
3372	3375	95	SILTSTONE: Light olive grey to medium grey, argillaceous in part, arenaceous, grading to a very fine SANDSTONE, trace carbonaceous specks and laminations, trace glauconite inclusions, trace micro mica, trace coarse loose quartz grains, soft to firm, minor dispersive, subblocky, minor amorphous
		5	SANDSTONE: Dark grey to medium grey, minor medium light grey, very fine, well sorted, subangular to subrounded, siliceous cement, trace strong calcareous cement, silty matrix, grading to SILTSTONE, trace of calcite grains, trace glauconite, trace black carbonaceous specks, firm to hard, poor inferred porosity, no shows.
3375	3378	90	SILTSTONE: Light olive grey to medium grey, argillaceous in part, arenaceous, grading to a very fine SANDSTONE, trace carbonaceous specks and laminations, trace glauconite inclusions, trace micro mica, trace coarse loose quartz grains, soft to firm, minor dispersive, subblocky, minor amorphous
		5	SANDSTONE: Dark grey to medium grey, minor medium light grey, very fine, well sorted, subangular to subrounded, siliceous cement, trace strong calcareous cement, silty matrix, grading to SILTSTONE, trace of calcite grains, trace glauconite, trace black carbonaceous specks, firm to hard, poor inferred porosity, no shows.
3378	3381	100	SILTSTONE: Light olive grey to medium grey, argillaceous in part, arenaceous, grading to a very fine SANDSTONE, trace carbonaceous specks and laminations, trace glauconite inclusions, trace micro mica, trace coarse loose quartz grains, soft to firm, minor dispersive, subblocky, minor amorphous

Depth From	Depth To	Lithology %	Description
3396	3399	95	SILTSTONE: Light olive grey to medium grey, argillaceous in part, arenaceous, grading to a very fine SANDSTONE, SLIGHTLY CALCAREOUS, trace carbonaceous specks and laminations, trace glauconite inclusions, trace micro mica, trace coarse loose quartz grains, soft to firm, minor dispersive, subblocky, minor amorphous
		5	SANDSTONE: Dark grey to medium grey, minor medium light grey, very fine, well sorted, subangular to subrounded, siliceous cement, trace strong calcareous cement, silty matrix, grading to SILTSTONE, trace of calcite grains, trace glauconite, trace black carbonaceous specks, firm to hard, poor inferred porosity, no shows.
3381	3384	95	SILTSTONE: Light olive grey to medium grey, argillaceous in part, arenaceous, grading to a very fine SANDSTONE, trace carbonaceous specks and laminations, trace glauconite inclusions, trace micro mica, trace coarse loose quartz grains, soft to firm, minor dispersive, subblocky, minor amorphous
		5	SANDSTONE: Dark grey to medium grey, minor medium light grey, very fine, well sorted, subangular to subrounded, siliceous cement, trace strong calcareous cement, silty matrix, grading to SILTSTONE, trace of calcite grains, trace glauconite, trace black carbonaceous specks, firm to hard, poor inferred porosity, no shows.
3384	3387	95	SILTSTONE: Light olive grey to medium grey, argillaceous in part, arenaceous, grading to a very fine SANDSTONE, trace carbonaceous specks and laminations, trace glauconite inclusions, trace micro mica, trace coarse loose quartz grains, soft to firm, minor dispersive, subblocky, minor amorphous
		5	SANDSTONE: Dark grey to medium grey, minor medium light grey, very fine, well sorted, subangular to subrounded, siliceous cement, trace strong calcareous cement, silty matrix, grading to SILTSTONE, trace of calcite grains, trace glauconite, trace black carbonaceous specks, firm to hard, poor inferred porosity, no shows.
3387	3390	100	SILTSTONE: Light olive grey to medium grey, argillaceous in part, arenaceous, grading to a very fine SANDSTONE, trace carbonaceous specks and laminations, trace glauconite inclusions, trace micro mica, trace coarse loose quartz grains, soft to firm, minor dispersive, subblocky, minor amorphous
3390	3393	100	SILTSTONE: Light olive grey to medium grey, argillaceous in part, arenaceous, grading to a very fine SANDSTONE, trace carbonaceous specks and laminations, trace glauconite inclusions, trace micro mica, trace coarse loose quartz grains, soft to firm, minor dispersive, subblocky, minor amorphous

Depth From	Depth To	Lithology %	Description
3393	3396	100	SILTSTONE: Brown to medium grey, argillaceous in part, arenaceous, grading to a very fine SANDSTONE, trace carbonaceous specks and minor laminations, trace micro glauconite inclusions, trace micro mica, trace coarse loose quartz grains, rare pyrite, soft to firm, subblocky
3399	3402	100	SILTSTONE: Brown to medium grey, argillaceous in part, arenaceous, grading to a very fine SANDSTONE, trace carbonaceous specks and minor laminations, trace micro glauconite inclusions, trace micro mica, trace coarse loose quartz grains, rare pyrite, soft to firm, subblocky
3402	3405	100	SILTSTONE: Brown to medium grey, argillaceous in part, arenaceous, grading to a very fine SANDSTONE, trace carbonaceous specks and minor laminations, trace micro glauconite inclusions, trace micro mica, trace coarse loose quartz grains, rare pyrite, soft to firm, subblocky
3405	3408	100	SILTSTONE: Brown to medium grey, argillaceous in part, arenaceous, grading to a very fine SANDSTONE, trace carbonaceous specks and minor laminations, trace micro glauconite inclusions, trace micro mica, trace coarse loose quartz grains, rare pyrite, soft to firm, subblocky
		trace	SANDSTONE: Light grey to very light grey, minor medium light grey, very fine to fine, well sorted, subrounded, strong siliceous cement, calcareous cement in part, silty matrix, grading to SILTSTONE, trace of calcite grains, trace glauconite, trace black carbonaceous specks, firm to hard, friable aggregates in part, poor inferred porosity, no shows.
3408	3411	100	SILTSTONE: Brown to medium grey, argillaceous in part, arenaceous, grading to a very fine SANDSTONE, trace carbonaceous specks and minor laminations, trace micro glauconite inclusions, trace micro mica, trace coarse loose quartz grains, rare pyrite, soft to firm, subblocky
		trace	SANDSTONE: Light grey to very light grey, minor medium light grey, very fine to fine, well sorted, subrounded, strong siliceous cement, calcareous cement in part, silty matrix, grading to SILTSTONE, trace of calcite grains, trace glauconite, trace black carbonaceous specks, firm to hard, friable aggregates in part, poor inferred porosity, no shows.
3411	3414	100	SILTSTONE: Brown to medium grey, argillaceous in part, arenaceous, grading to a very fine SANDSTONE, trace carbonaceous specks and minor laminations, trace micro glauconite inclusions, trace micro mica, trace coarse loose quartz grains, rare pyrite, soft to firm, subblocky

Depth From	Depth To	Lithology %	Description
3414	3417	100	SILTSTONE: Brown to medium grey, argillaceous in part, arenaceous, grading to a very fine SANDSTONE, trace carbonaceous specks and minor laminations, trace micro glauconite inclusions, trace micro mica, trace coarse loose quartz grains, rare pyrite, soft to firm, subblocky
3417	3420	100	SILTSTONE: Brown to medium grey, argillaceous in part, arenaceous, grading to a very fine SANDSTONE, trace carbonaceous specks and minor laminations, trace micro glauconite inclusions, trace micro mica, trace coarse loose quartz grains, rare pyrite, soft to firm, subblocky
3420	3423	100	SILTSTONE: Brown to medium grey, argillaceous in part, arenaceous, grading to a very fine SANDSTONE, trace carbonaceous specks and minor laminations, trace micro glauconite inclusions, trace micro mica, trace coarse loose quartz grains, rare pyrite, soft to firm, subblocky
3423	3426	100	SILTSTONE: Brown to dark grey, argillaceous in part, arenaceous, grading to a very fine SANDSTONE, trace carbonaceous specks and minor laminations, trace micro glauconite inclusions, trace micro mica, trace coarse loose quartz grains, rare pyrite, soft to firm, subblocky
3426	3429	95	SILTSTONE: Dark brown to dark grey, argillaceous in part, arenaceous, grading to a very fine SANDSTONE, trace carbonaceous specks and minor laminations, trace micro glauconite inclusions, trace micro mica, trace coarse loose quartz grains, rare pyrite, soft to firm, subblocky
		5	SANDSTONE: Light grey to very light grey, very fine to fine, minor medium, generally well sorted, subrounded, strong siliceous cement, trace calcareous cement in part, common argillaceous and silty matrix, grading to SILTSTONE: Trace to locally common carbonaceous specks, moderately hard to hard, friable aggregates in part, poor inferred porosity, common brown yellow mineral fluorescence, trace moderately bright yellow fluorescence, slow yellow crush cut, faint yellow ring residue.
3429	3432	70	SILTSTONE: Dark brown to dark grey, argillaceous in part, arenaceous, grading to a very fine SANDSTONE, trace carbonaceous specks and minor laminations, trace micro glauconite inclusions, trace micro mica, trace coarse loose quartz grains, rare pyrite, soft to firm, subblocky
		30	SANDSTONE: Light to very light grey, very fine to fine, minor medium grained, generally well sorted, subrounded, strong siliceous cement, trace calcareous cement in part, common argillaceous and silty matrix, grading to SILTSTONE, trace to locally common carbonaceous specks, moderately hard to hard, friable aggregates in part, poor inferred porosity, common brown yellow mineral fluorescence, trace moderately bright yellow fluorescence, slow yellow crush cut, faint yellow ring residue.

Depth From	Depth To	Lithology %	Description
3432	3435	70	SILTSTONE: Dark brown to dark grey, argillaceous in part, arenaceous, grading to a very fine SANDSTONE, trace carbonaceous specks and minor laminations, trace micro glauconite inclusions, trace micro mica, rare pyrite, soft to firm, subblocky
		30	SANDSTONE: Light grey to very light grey, very fine to fine, minor medium, generally well sorted, subrounded, strong siliceous cement, trace calcareous cement in part, common argillaceous and silty matrix, grading to SILTSTONE, trace to locally common carbonaceous specks, moderately hard to hard, friable aggregates in part, poor inferred porosity, common brown yellow mineral fluorescence, rare moderately bright yellow fluorescence, slow yellow crush cut, faint yellow ring residue.
3435	3438	70	SILTSTONE: Dark brown to dark grey, argillaceous in part, arenaceous, grading to a very fine SANDSTONE, trace carbonaceous specks and minor laminations, trace micro glauconite inclusions, trace micro mica, trace coarse loose quartz grains, rare pyrite, soft to firm, subblocky
		30	SANDSTONE: Light grey to very light grey, dominantly fine, common very fine, increasing medium, minor coarse loose grains, moderately sorted, subangular to subrounded, weak to strong siliceous cement, common argillaceous and silty matrix, grades to SILTSTONE in part, trace to locally common carbonaceous specks, moderately hard to hard, friable in part, poor inferred porosity, common brown yellow mineral fluorescence, no fluorescence.
3438	3441	60	SILTSTONE: Dark brown to dark grey, argillaceous in part, arenaceous, grading to a very fine SANDSTONE, trace carbonaceous specks and minor laminations, trace micro mica, trace coarse loose quartz grains, rare pyrite, soft to firm, subblocky
		40	SANDSTONE: Light grey to very light grey, fine to medium, minor coarse loose grains, moderately sorted, subangular to subrounded, weak to strong siliceous cement, common argillaceous matrix, trace carbonaceous specks, moderately hard to hard, friable in part, poor inferred porosity, common brown yellow mineral fluorescence, no fluorescence.
3441	3444	50	SILTSTONE: Dark brown to dark grey, argillaceous in part, arenaceous, grading to a very fine SANDSTONE, trace carbonaceous specks and minor laminations, trace, trace micro mica, trace coarse loose quartz grains, rare pyrite, soft to firm, subblocky
		50	SANDSTONE: Light grey to very light grey, fine to medium, minor coarse loose grains, moderately sorted, subangular to subrounded, weak to strong siliceous cement, common argillaceous matrix, trace carbonaceous specks, moderately hard to hard, friable in part, poor inferred porosity, common brown yellow mineral fluorescence, no fluorescence.

Depth From	Depth To	Lithology %	Description
3444	3447	30	SILTSTONE: Dark brown to dark grey, argillaceous in part, arenaceous, trace carbonaceous specks and minor laminations, trace micro mica, trace coarse loose quartz grains, firm, subblocky
		70	SANDSTONE: Generally white to very light grey, minor dark grey, fine to medium, occasionally coarse, poor sorting, subangular to subrounded, trace siliceous cement, trace to common argillaceous matrix, trace lithic, poor visual porosity, poor to fair inferred porosity, common mineral fluorescence, no hydrocarbon fluorescence.
3447	3450	30	SILTSTONE: Dark brown to dark grey, argillaceous in part, arenaceous, trace carbonaceous specks and minor laminations, trace micro glauconite inclusions, trace micro mica, trace coarse loose quartz grains, firm, subblocky
		70	SANDSTONE: Generally white to very light grey, minor dark grey, fine to medium, rare coarse, poor sorting, subangular to subrounded, trace siliceous cement, trace to common argillaceous matrix, trace lithics, poor visual porosity, poor to fair inferred porosity, common mineral fluorescence, no hydrocarbon fluorescence.
3450	3453	20	SILTSTONE: Dark brown to dark grey, argillaceous in part, arenaceous, trace carbonaceous specks and minor laminations, trace micro mica, trace coarse loose quartz grains, firm, subblocky
		80	SANDSTONE: Generally white to very light grey, minor dark grey, fine to medium, rare coarse, poor sorting, subangular to subrounded, trace siliceous cement, trace to common argillaceous matrix, trace lithics, poor visual porosity, poor to fair inferred porosity, common mineral fluorescence, no hydrocarbon fluorescence.
3453	3456	20	SILTSTONE: Dark brown to dark grey, argillaceous in part, arenaceous, trace carbonaceous specks and minor laminations, trace micro mica, trace coarse loose quartz grains, firm, subblocky
		80	SANDSTONE: White to very light grey, minor dark grey, fine to medium, rare coarse, poor sorting, subangular to subrounded, trace siliceous cement, trace to common argillaceous matrix, trace lithics, poor visual porosity, moderately hard, friable in part, poor to fair inferred porosity, common mineral fluorescence, no hydrocarbon fluorescence.

Depth From	Depth To	Lithology %	Description
3456	3459	50	SILTSTONE: Dark brown to dark grey, argillaceous in part, arenaceous, trace carbonaceous specks and minor laminations, trace micro mica, trace coarse loose quartz grains, firm, subblocky
		50	SANDSTONE: Generally white to very light grey, minor dark grey, fine to medium, rare coarse, poor sorting, subangular to subrounded, trace siliceous cement, trace to common argillaceous matrix, trace lithics, poor visual porosity, poor to fair inferred porosity, common mineral fluorescence, no hydrocarbon fluorescence.
3459	3462	70	SILTSTONE: Dark brown to dark grey, argillaceous in part, arenaceous, grading to a very fine SANDSTONE, trace carbonaceous specks and minor laminations, trace micro mica, trace coarse loose quartz grains, rare pyrite, soft to firm, subblocky
		30	SANDSTONE: Light grey to very light grey, fine to medium, minor coarse loose grains, moderately sorted, subangular to subrounded, weak to strong siliceous cement, common argillaceous matrix, trace carbonaceous specks, moderately hard to hard, friable in part, poor inferred porosity, common brown yellow mineral fluorescence, no fluorescence.
3462	3465	80	SILTSTONE: Dark brown to dark grey, argillaceous in part, arenaceous, grading to a very fine SANDSTONE, trace carbonaceous specks and minor laminations, trace micro mica, trace coarse loose quartz grains, rare pyrite, soft to firm, subblocky
		20	SANDSTONE: Light grey to very light grey, fine to medium, minor coarse loose grains, moderately sorted, subangular to subrounded, weak to strong siliceous cement, common argillaceous matrix, trace carbonaceous specks, moderately hard to hard, friable in part, poor inferred porosity, common brown yellow mineral fluorescence, no fluorescence.
3465	3468	70	SILTSTONE: Dark brown to dark grey, argillaceous in part, arenaceous, grading to a very fine SANDSTONE, trace carbonaceous specks and minor laminations, trace micro mica, trace coarse loose quartz grains, rare pyrite, soft to firm, subblocky
		30	SANDSTONE: Light grey to very light grey, fine to medium, minor coarse loose grains, moderately sorted, subangular to subrounded, weak to strong siliceous cement, common argillaceous matrix, trace carbonaceous specks, moderately hard to hard, friable in part, poor inferred porosity, common brown yellow mineral fluorescence, no fluorescence.

Depth From	Depth To	Lithology %	Description
3468	3471	30	SILTSTONE: Dark brown to dark grey, argillaceous in part, arenaceous, grading to a very fine SANDSTONE, trace carbonaceous specks and minor laminations, trace micro mica, trace coarse loose quartz grains, rare pyrite, soft to firm, subblocky
		70	SANDSTONE: Light grey to very light grey, dominantly fine to common medium, minor coarse loose grains, moderately sorted, subangular to subrounded, weak to strong siliceous cement, common argillaceous matrix, trace carbonaceous specks, moderately hard to hard, friable in part, poor inferred porosity, common brown yellow mineral fluorescence, no fluorescence.
3471	3474	30	SILTSTONE: Dark brown to dark grey, argillaceous in part, arenaceous, grading to a very fine SANDSTONE, trace carbonaceous specks and minor laminations, trace micro mica, trace coarse loose quartz grains, rare pyrite, soft to firm, subblocky
		70	SANDSTONE: Light grey to very light grey, translucent, fine to dominantly medium, minor coarse loose quartz, moderately sorted, subangular to minor subrounded, weak to strong siliceous cement, common argillaceous matrix, trace carbonaceous specks, moderately hard to hard, friable in part, poor inferred porosity, common brown yellow mineral fluorescence, no fluorescence.
3474	3477	20	SILTSTONE: Medium to dark grey, brown grey, argillaceous in part, arenaceous, grading to a very fine SANDSTONE, trace carbonaceous specks and minor laminations, trace micro mica, trace coarse loose quartz grains, rare pyrite, soft to firm, subblocky
		80	SANDSTONE: Light grey to very light grey, clear in part, fine to medium, minor coarse loose grains, moderately sorted, subangular to subrounded, weak to strong siliceous cement, common white argillaceous (kaolinitic) matrix, trace carbonaceous specks, moderately hard to hard, friable in part, poor inferred porosity, common brown yellow mineral fluorescence, no fluorescence.
3477	3480	10	SILTSTONE: Dark brown to dark grey, argillaceous in part, arenaceous, grading to a very fine SANDSTONE, trace carbonaceous specks and minor laminations, trace micro mica, trace coarse loose quartz grains, rare pyrite, soft to firm, subblocky
		90	SANDSTONE: Light grey to very light grey, fine to medium, common coarse to very coarse grains, moderately sorted, subangular to subrounded, common strong siliceous cement, common argillaceous and silty matrix, trace to common carbonaceous specks, moderate hard to hard, friable in part, poor visual porosity, common brown yellow mineral fluorescence, <u>rare to trace moderate bright yellow fluorescence, slow yellow crush cut, faint yellow ring residue</u>

Depth From	Depth To	Lithology %	Description
3480	3483	20	SILTSTONE: Dark brown to dark grey, argillaceous in part, arenaceous, grading to a very fine SANDSTONE, trace carbonaceous specks and minor laminations, trace micro mica, trace coarse loose quartz grains, rare pyrite, soft to firm, subblocky
		80	SANDSTONE: Light grey to very light grey, very fine to medium, trace coarse to very coarse grains, poorly sorted, subangular to subrounded, weak to locally strong siliceous cement, common argillaceous and silty matrix, trace to common carbonaceous specks, moderate hard to hard, friable in part, poor visual porosity, common brown yellow mineral fluorescence, rare to trace moderate bright yellow fluorescence, slow yellow crush cut, faint yellow ring residue
3483	3486	20	SILTSTONE: Dark brown to dark grey, argillaceous in part, arenaceous, grading to a very fine SANDSTONE, trace carbonaceous specks and minor laminations, trace micro mica, trace coarse loose quartz grains, rare pyrite, soft to firm, subblocky
		80	SANDSTONE: Light grey to very light grey, fine to medium, common coarse to very coarse grains, generally poorly sorted, subangular to subrounded, common strong siliceous cement, occasional quartz overgrowths, common argillaceous and silty matrix, trace to common carbonaceous specks, moderate hard to hard, friable in part, poor visual porosity, common brown yellow mineral fluorescence, rare to trace moderate bright yellow fluorescence, slow yellow crush cut, faint yellow ring residue
3486	3489	50	SILTSTONE: Dark brown to dark grey, argillaceous in part, arenaceous, grading to a very fine SANDSTONE, trace carbonaceous specks and minor laminations, trace micro mica, trace coarse loose quartz grains, rare pyrite, soft to firm, subblocky
		50	SANDSTONE: White to very light grey, dominant medium, common coarse, moderate well sorting, dominant subangular, subrounded in part, trace to locally common moderately strong siliceous cement, trace to common white argillaceous matrix, friable to moderate hard, poor visual porosity, poor to fair inferred porosity, common mineral fluorescence, no hydrocarbon fluorescence

Depth From	Depth To	Lithology %	Description
3489	3492	70	SILTSTONE: Dark brown to dark grey, argillaceous in part, arenaceous, grading to a very fine SANDSTONE, trace carbonaceous specks and minor laminations, trace micro mica, trace coarse loose quartz grains, rare pyrite, soft to firm, subblocky
		30	SANDSTONE: White to very light grey, dominant medium, common coarse, moderate well sorting, dominant subangular, subrounded in part, trace to locally common moderately strong siliceous cement, trace to common white argillaceous matrix, friable to moderate hard, poor visual porosity, poor to fair inferred porosity, common mineral fluorescence, no hydrocarbon fluorescence
3492	3495	20	SILTSTONE: Dark brown to dark grey, argillaceous in part, arenaceous, grading to a very fine SANDSTONE, trace carbonaceous specks and minor laminations, trace micro mica, trace coarse loose quartz grains, rare pyrite, soft to firm, subblocky
		80	SANDSTONE: White to very light grey, dominantly fine to medium, minor coarse, moderate sorting, subangular, subrounded, locally common moderately strong siliceous cement, trace to common white argillaceous matrix, friable to moderate hard, poor visual porosity, poor to fair inferred porosity, common mineral fluorescence, no hydrocarbon fluorescence
3495	3498	60	SILTSTONE: Dark brown to dark grey, argillaceous in part, arenaceous, grading to a very fine SANDSTONE, trace carbonaceous specks and minor laminations, trace micro mica, trace coarse loose quartz grains, rare pyrite, soft to firm, subblocky
		40	SANDSTONE: White to very light grey, very fine to medium, minor coarse, poor sorting, subangular to subrounded, trace to locally common moderately strong siliceous cement, trace to common white argillaceous matrix, grades to arenaceous SILTSTONE in part, friable to dominantly moderate hard, minor hard, poor visual porosity, common mineral fluorescence, no hydrocarbon fluorescence
3498	3501	30	SILTSTONE: Dark brown to dark grey, argillaceous in part, arenaceous, grading to a very fine SANDSTONE, trace carbonaceous specks and minor laminations, trace micro mica, trace coarse loose quartz grains, rare pyrite, soft to firm, subblocky
		70	SANDSTONE: White to very light grey, dominant medium, common coarse, moderate well sorting, dominant subangular, subrounded in part, trace to locally common moderately strong siliceous cement, trace to common white argillaceous matrix, trace to common carbonaceous specks and detritus, friable to moderate hard, poor visual porosity, poor to fair inferred porosity, common mineral fluorescence, no hydrocarbon fluorescence

Depth From	Depth To	Lithology %	Description
3501	3504	60	SILTSTONE: Brown to light grey, argillaceous, very arenaceous, grading to a very fine SANDSTONE, trace to common carbonaceous specks and minor laminations, trace micro mica, trace coarse loose quartz grains, rare pyrite, soft to firm, subblocky
		40	SANDSTONE: White to very light grey, dominant medium, common coarse, moderate well sorting, subangular to subrounded, moderately strong siliceous cement, trace to common white argillaceous matrix, friable to moderate hard, poor visual porosity, poor to fair inferred porosity, common mineral fluorescence, no hydrocarbon fluorescence
3504	3507	50	SILTSTONE: Brown to light grey, argillaceous, very arenaceous, grading to a very fine SANDSTONE, trace to common carbonaceous specks and minor laminations, trace micro mica, trace coarse loose quartz grains, rare pyrite, soft to firm, subblocky
		50	SANDSTONE: White to very light grey, fine to medium, minor coarse, poorly sorting, subangular to subrounded, moderately strong siliceous cement, trace to common white argillaceous matrix, moderately hard to hard, poor visual porosity, common mineral fluorescence, no hydrocarbon fluorescence
3507	3510	80	SILTSTONE: Brown to light grey, argillaceous, very arenaceous, grading to a very fine SANDSTONE, trace to common carbonaceous specks and minor laminations, trace micro mica, trace coarse loose quartz grains, soft to firm, subblocky
		20	SANDSTONE: White to very light grey, fine to medium, minor coarse, poorly sorting, subangular to subrounded, moderately strong siliceous cement, trace to common white argillaceous matrix, moderately hard to hard, poor visual porosity, common mineral fluorescence, no hydrocarbon fluorescence
3510	3513	90	SILTSTONE: Brown to light grey, argillaceous, very arenaceous, grading to a very fine SANDSTONE, trace to common carbonaceous specks and minor laminations, trace micro mica, trace coarse loose quartz grains, soft to firm, subblocky
		10	SANDSTONE: White to very light grey, fine to medium, minor coarse, poorly sorting, subangular to subrounded, moderately strong siliceous cement, trace to common white argillaceous matrix, moderately hard to hard, poor visual porosity, common mineral fluorescence, no hydrocarbon fluorescence

Depth From	Depth To	Lithology %	Description
3513	3516	90	SILTSTONE: Brown to light grey, argillaceous, very arenaceous, grading to a very fine SANDSTONE, trace to common carbonaceous specks and minor laminations, trace micro mica, trace coarse loose quartz grains, soft to firm, subblocky
		10	SANDSTONE: White to very light grey, fine to medium, minor coarse, poorly sorting, subangular to subrounded, moderately strong siliceous cement, trace to common white argillaceous matrix, moderately hard to hard, poor visual porosity, common mineral fluorescence, no hydrocarbon fluorescence
3516	3519	90	SILTSTONE: Brown to light grey, argillaceous, very arenaceous, grading to a very fine SANDSTONE, trace to common carbonaceous specks and minor laminations, trace micro mica, trace coarse loose quartz grains, soft to firm, subblocky
		10	SANDSTONE: White to very light grey, fine to medium, minor coarse, poorly sorting, subangular to subrounded, moderately strong siliceous cement, trace to common white argillaceous matrix, moderately hard to hard, poor visual porosity, common mineral fluorescence, no hydrocarbon fluorescence
3519	3522	90	SILTSTONE: Brown to light grey, argillaceous, very arenaceous, grading to a very fine SANDSTONE, trace to common carbonaceous specks and minor laminations, trace micro mica, trace coarse loose quartz grains, soft to firm, subblocky
		10	SANDSTONE: White to very light grey, fine to medium, minor coarse, poorly sorting, subangular to subrounded, moderately strong siliceous cement, trace to common white argillaceous matrix, moderately hard to hard, poor visual porosity, common mineral fluorescence, no hydrocarbon fluorescence
3522	3525	50	SILTSTONE: Brown to light grey, argillaceous, very arenaceous, grading to a very fine SANDSTONE, trace to common carbonaceous specks and minor laminations, trace micro mica, trace coarse loose quartz grains, soft to firm, subblocky
		50	SANDSTONE: White to very light grey, very fine to fine, minor medium and coarse, moderate sorting, subangular to subrounded, weak to moderately strong siliceous cement, trace to common white argillaceous matrix, friable to moderately hard, occasionally hard, poor visual porosity, common mineral fluorescence, <u>trace moderately bright yellow pinpoint fluorescence, trace weak crush cut, trace ring residue.</u>

Depth From	Depth To	Lithology %	Description
3525	3528	30	SILTSTONE: Brown to light grey, argillaceous, very arenaceous, grading to a very fine SANDSTONE, trace to common carbonaceous specks and minor laminations, trace micro mica, trace coarse loose quartz grains, soft to firm, subblocky
		70	SANDSTONE: White to very light grey, very fine to fine, minor medium and coarse, moderate sorting, subangular to subrounded, weak to moderately strong siliceous cement, trace to common white argillaceous matrix, friable to moderately hard, occasionally hard, poor visual porosity, common mineral fluorescence, trace moderately bright yellow pinpoint fluorescence, trace weak crush cut, trace ring residue.
3528	3531	70	SILTSTONE: Brown to light grey, argillaceous, very arenaceous, grading to a very fine SANDSTONE, trace to common carbonaceous specks and minor laminations, trace micro mica, trace coarse loose quartz grains, soft to firm, subblocky
		30	SANDSTONE: White to very light grey, very fine to fine, minor medium and coarse, moderate sorting, subangular to subrounded, weak to moderately strong siliceous cement, trace to common white argillaceous matrix, friable to moderately hard, occasionally hard, poor visual porosity, common mineral fluorescence, no fluorescence.
3531	3534	40	SILTSTONE: Brown to light grey, argillaceous, very arenaceous, grading to a very fine SANDSTONE, trace to common carbonaceous specks and minor laminations, trace micro mica, trace coarse loose quartz grains, soft to firm, subblocky
		55	SANDSTONE: White to very light grey, very fine to fine, minor medium and coarse, moderate sorting, subangular to subrounded, weak to moderately strong siliceous cement, trace to common white argillaceous matrix, friable to moderately hard, occasionally hard, poor visual porosity, common mineral fluorescence, no fluorescence.
		5	COAL: Black, vitreous, sub vitreous, friable, subblocky.
3534	3537	70	SILTSTONE: Brown to light grey, argillaceous, very arenaceous, grading to a very fine SANDSTONE, trace to common carbonaceous specks and minor laminations, trace micro mica, trace coarse loose quartz grains, soft to firm, subblocky
		30	SANDSTONE: White to very light grey, very fine to fine, minor medium and coarse, moderate sorting, subangular to subrounded, weak to moderately strong siliceous cement, trace to common white argillaceous matrix, friable to moderately hard, occasionally hard, poor visual porosity, common mineral fluorescence, no fluorescence.

Depth From	Depth To	Lithology %	Description
3537	3540	65	SILTSTONE: Brown to light grey, argillaceous, very arenaceous, grading to a very fine SANDSTONE, trace to common carbonaceous specks and minor laminations, trace micro mica, trace coarse loose quartz grains, soft to firm, subblocky
		35	SANDSTONE: White to very light grey, very fine to fine, minor medium and coarse, moderate sorting, subangular to subrounded, weak to moderately strong siliceous cement, trace to common white argillaceous matrix, friable to moderately hard, occasionally hard, poor visual porosity, common mineral fluorescence, no fluorescence.
3540	3543	60	SILTSTONE: Brown to light grey, argillaceous, very arenaceous, grading to a very fine SANDSTONE, trace to common carbonaceous specks and minor laminations, trace micro mica, trace coarse loose quartz grains, soft to firm, subblocky
		40	SANDSTONE: White to very light grey, very fine to fine, minor medium and coarse, moderate sorting, subangular to subrounded, weak to moderately strong siliceous cement, trace to common white argillaceous matrix, friable to moderately hard, occasionally hard, poor visual porosity, common mineral fluorescence, no fluorescence.
3543	3546	60	SILTSTONE: Brown to light grey, argillaceous, very arenaceous, grading to a very fine SANDSTONE, trace to common carbonaceous specks and minor laminations, trace micro mica, trace coarse loose quartz grains, soft to firm, subblocky
		40	SANDSTONE: White to very light grey, very fine to fine, minor medium and coarse, moderate sorting, subangular to subrounded, weak to moderately strong siliceous cement, trace to common white argillaceous matrix, friable to moderately hard, occasionally hard, poor visual porosity, common mineral fluorescence, no fluorescence.
3546	3549	70	SILTSTONE: Brown to light grey, argillaceous, very arenaceous, grading to a very fine SANDSTONE, trace to common carbonaceous specks and minor laminations, trace micro mica, trace coarse loose quartz grains, soft to firm, subblocky
		30	SANDSTONE: White to very light grey, very fine to fine, minor medium and coarse, moderate sorting, subangular to subrounded, weak to moderately strong siliceous cement, trace to common white argillaceous matrix, friable to moderately hard, occasionally hard, poor visual porosity, common mineral fluorescence, no fluorescence.

Depth From	Depth To	Lithology %	Description
3549	3552	70 30	SILTSTONE: Medium grey to dark grey, argillaceous in part, arenaceous, grading to fine SANDSTONE, trace carbonaceous specks and laminations, sticky in part, firm to hard, subblocky SANDSTONE: Very light grey to medium grey, fine to medium, moderately sorted, subangular to subrounded, moderately strong siliceous cement, trace moderately strong calcareous cement, trace white argillaceous matrix, trace COAL, trace loose medium to coarse quartz grains, friable to moderately hard, common very hard, poor inferred porosity, trace mineral fluorescence, no shows.
3552	3555	60 40	SILTSTONE: Medium grey to dark grey, argillaceous in part, arenaceous, grading to fine SANDSTONE, trace carbonaceous specks and laminations, sticky in part, firm to hard, subblocky SANDSTONE: Very light grey to medium grey, fine to medium, moderately sorted, subangular to subrounded, moderately strong siliceous cement, trace moderately strong calcareous cement, trace white argillaceous matrix, trace COAL, trace loose medium to coarse quartz grains, friable to moderately hard, common very hard, poor inferred porosity, trace mineral fluorescence, no shows.
3555	3558	50 50	SILTSTONE: Medium grey to dark grey, argillaceous in part, arenaceous, grading to fine SANDSTONE, trace carbonaceous specks and laminations, sticky in part, firm to hard, subblocky SANDSTONE: Very light grey to medium grey, fine to medium, moderately sorted, subangular to subrounded, moderately strong siliceous cement, trace moderately strong calcareous cement, trace white argillaceous matrix, trace COAL, trace loose medium to coarse quartz grains, friable to moderately hard, common very hard, poor inferred porosity, trace mineral fluorescence, no shows.
3558	3561	50 50	SILTSTONE: Medium grey to dark grey, argillaceous in part, arenaceous, grading to fine SANDSTONE, trace carbonaceous specks and laminations, sticky in part, firm to hard, subblocky SANDSTONE: Very light grey to medium grey, fine to medium, moderately sorted, subangular to subrounded, moderately strong siliceous cement, trace moderately strong calcareous cement, trace white argillaceous matrix, trace COAL, trace loose medium to coarse quartz grains, friable to moderately hard, common very hard, poor inferred porosity, trace mineral fluorescence, no shows.

Depth From	Depth To	Lithology %	Description
3561	3564	60 40	SILTSTONE: Medium grey to dark grey, argillaceous in part, arenaceous, grading to fine SANDSTONE, trace carbonaceous specks and laminations, sticky in part, firm to hard, subblocky SANDSTONE: Very light grey to medium grey, fine to medium, moderately sorted, subangular to subrounded, moderately strong siliceous cement, trace moderately strong calcareous cement, trace white argillaceous matrix, trace COAL, trace loose medium to coarse quartz grains, friable to moderately hard, common very hard, poor inferred porosity, trace mineral fluorescence, no shows.
3564	3567	70 30	SILTSTONE: Medium grey to dark grey, argillaceous in part, arenaceous, grading to fine SANDSTONE, trace carbonaceous specks and laminations, sticky in part, firm to hard, subblocky SANDSTONE: Very light grey to medium grey, fine to medium, moderately sorted, subangular to subrounded, moderately strong siliceous cement, trace moderately strong calcareous cement, trace white argillaceous matrix, trace COAL, trace loose medium to coarse quartz grains, friable to moderately hard, common very hard, poor inferred porosity, trace mineral fluorescence, no shows.
3567	3570	75 25	SILTSTONE: Medium grey to dark grey, argillaceous in part, arenaceous, grading to fine SANDSTONE, trace carbonaceous specks and laminations, sticky in part, firm to hard, subblocky SANDSTONE: Very light grey to medium grey, fine to medium, moderately sorted, subangular to subrounded, moderately strong siliceous cement, trace moderately strong calcareous cement, trace white argillaceous matrix, trace COAL, trace loose medium to coarse quartz grains, friable to moderately hard, common very hard, poor inferred porosity, trace mineral fluorescence, no shows.
3570	3573	75 25	SILTSTONE: Medium grey to dark grey, argillaceous in part, arenaceous, grading to fine SANDSTONE, trace carbonaceous specks and laminations, sticky in part, firm to hard, subblocky SANDSTONE: Very light grey to medium grey, fine to medium, moderately sorted, subangular to subrounded, moderate to strong siliceous cement, trace moderately strong calcareous cement, trace white argillaceous matrix, trace COAL, trace loose medium to coarse quartz grains, friable to moderately hard, common very hard, poor inferred porosity, trace mineral fluorescence, no shows.

Depth From	Depth To	Lithology %	Description
3573	3576	75	SILTSTONE: Medium grey to dark grey, argillaceous in part, arenaceous, grading to fine SANDSTONE, trace carbonaceous specks and laminations, sticky in part, firm to hard, subblocky
		25	SANDSTONE: Very light grey to medium grey, fine to medium, moderately sorted, subangular to subrounded, moderate to strong siliceous cement, trace moderately strong calcareous cement, trace white argillaceous matrix, trace COAL, trace loose medium to coarse quartz grains, friable to moderately hard, common very hard, poor inferred porosity, no shows.
3576	3579	70	SILTSTONE: Medium grey to dark grey, common brownish grey, argillaceous in part, arenaceous, grading to fine SANDSTONE, trace carbonaceous specks and laminations, sticky in part, firm to hard, subblocky
		30	SANDSTONE: Very light grey to medium grey, fine to medium, moderately sorted, subangular to subrounded, strong siliceous cement, trace weak to moderately strong calcareous cement, trace white argillaceous matrix, trace COAL, trace loose medium to coarse quartz grains, friable to moderately hard, common very hard, poor inferred porosity, no shows.
3579	3582	60	SILTSTONE: Medium grey to dark grey, common brownish grey, argillaceous in part, arenaceous, grading to fine SANDSTONE, trace carbonaceous specks and laminations, sticky in part, firm to hard, subblocky
		40	SANDSTONE: Very light grey to medium grey, fine to medium, moderately sorted, subangular to subrounded, strong siliceous cement, trace weak to moderately strong calcareous cement, trace white argillaceous matrix, trace COAL, friable to moderately hard, common very hard, poor inferred porosity, no shows.
3582	3585	50	SILTSTONE: Medium grey to dark grey, common brownish grey, argillaceous in part, arenaceous, grading to fine SANDSTONE, trace carbonaceous specks and laminations, sticky in part, firm to hard, subblocky
		50	SANDSTONE: Very light grey to medium grey, fine to medium, moderately sorted, subangular to subrounded, strong siliceous cement, trace weak to moderately strong calcareous cement, trace white argillaceous matrix, trace COAL, friable to moderately hard, common very hard, poor inferred porosity, no shows.

Depth From	Depth To	Lithology %	Description
3585	3588	30 70	SILTSTONE: Medium grey to dark grey, common brownish grey, argillaceous in part, arenaceous, grading to fine SANDSTONE, trace glauconite, trace carbonaceous specks and laminations, sticky in part, firm to hard, subblocky SANDSTONE: Very light grey to medium grey, fine to medium, moderately sorted, subangular to subrounded, strong siliceous cement, trace weak to strong calcareous cement, slightly to very calcareous, trace white argillaceous matrix, trace COAL, friable to moderately hard, common very hard, poor inferred porosity, no shows.
3588	3591	40 60	SILTSTONE: Medium grey to dark grey, common brownish grey, argillaceous in part, arenaceous, grading to fine SANDSTONE, trace glauconite, trace carbonaceous specks and laminations, sticky in part, firm to hard, subblocky SANDSTONE: Very light grey to medium grey, fine to medium, moderately sorted, subangular to subrounded, strong siliceous cement, trace weak to strong calcareous cement, slightly to very calcareous, trace white argillaceous matrix, trace COAL, occasional loose coarse quartz grains, friable to moderately hard, common very hard, poor inferred porosity, no shows.
3591	3594	50 50	SILTSTONE: Medium grey to dark grey, common brownish grey, argillaceous in part, arenaceous, grading to fine SANDSTONE, trace glauconite, trace carbonaceous specks and laminations, sticky in part, firm to hard, subblocky SANDSTONE: Very light grey to medium grey, fine to medium, moderately sorted, subangular to subrounded, strong siliceous cement, trace weak to strong calcareous cement, slightly to very calcareous, trace white argillaceous matrix, trace carbonaceous specks, occasional loose coarse quartz grains, , friable to moderately hard, common very hard, poor inferred porosity, no shows.
3594	3597	70 30	SILTSTONE: Medium dark grey to brownish grey, argillaceous in part, arenaceous, grading to fine SANDSTONE, trace glauconite, trace carbonaceous specks and laminations, sticky in part, firm to hard, subblocky SANDSTONE: Very light grey to medium grey, fine to medium, moderately sorted, subangular to subrounded, strong siliceous cement, trace weak to strong calcareous cement, slightly to very calcareous, trace white argillaceous matrix, trace carbonaceous specks, occasional loose coarse quartz grains, friable to moderately hard, common very hard, poor inferred porosity, no shows.

Depth From	Depth To	Lithology %	Description
3597	3600	80 20	SILTSTONE: Medium dark grey to brownish grey, argillaceous in part, arenaceous, grading to fine SANDSTONE, trace glauconite, trace carbonaceous specks and laminations, sticky in part, firm to hard, subblocky SANDSTONE: Very light grey to medium grey, fine to medium, moderately sorted, subangular to subrounded, strong siliceous cement, trace weak to strong calcareous cement, slightly to very calcareous, trace white argillaceous matrix, occasional loose coarse quartz grains, friable to moderately hard, common very hard, poor inferred porosity, no shows.
3600	3603	80 20	SILTSTONE: Medium dark grey to brownish grey, argillaceous in part, arenaceous, grading to fine SANDSTONE, trace carbonaceous specks and laminations, sticky in part, firm to hard, subblocky SANDSTONE: Very light grey to medium grey, fine to medium quartz sand, moderately sorted, subangular to subrounded, strong siliceous cement, trace weak to strong calcareous cement, slightly to very calcareous, trace white argillaceous matrix, occasional loose coarse quartz grains, friable to moderately hard, common very hard, poor inferred porosity, no shows.
3603	3606	70 30	SILTSTONE: Medium dark grey to brownish grey, argillaceous in part, arenaceous, grading to fine SANDSTONE, trace carbonaceous specks and laminations, sticky in part, firm to hard, subblocky SANDSTONE: Very light grey to medium grey, fine to medium quartz sand, moderately sorted, subangular to subrounded, strong siliceous cement, trace weak to strong calcareous cement, slightly to very calcareous, trace white argillaceous matrix, occasional loose coarse quartz grains, friable to moderately hard, common very hard, poor inferred porosity, no shows.
3606	3609	40 60	SILTSTONE: Medium dark grey to brownish grey, argillaceous in part, arenaceous, grading to fine SANDSTONE, trace carbonaceous specks and laminations, sticky in part, firm to hard, subblocky SANDSTONE: Very light grey to medium grey, fine to medium quartz sand, moderately sorted, subangular to subrounded, strong siliceous cement, trace weak to moderate calcareous cement, slightly to very calcareous, trace white argillaceous matrix, occasional loose coarse quartz grains, friable to moderately hard, common very hard, poor inferred porosity, no shows.

Depth From	Depth To	Lithology %	Description
3609	3612	20	SILTSTONE: Medium dark grey to brownish grey, argillaceous in part, arenaceous, grading to fine SANDSTONE, trace carbonaceous specks and laminations, sticky in part, firm to hard, subblocky
		80	SANDSTONE: Very light grey to medium grey, very fine to fine quartz sand, occasional medium, moderately sorted, subangular to subrounded, strong siliceous cement, trace weak to moderate calcareous cement, slightly to very calcareous, trace white argillaceous matrix, friable to moderately hard, common very hard, poor inferred porosity, no shows.
3612	3615	30	SILTSTONE: Medium dark grey to brownish grey, argillaceous in part, arenaceous, grading to fine SANDSTONE, trace carbonaceous specks and laminations, sticky in part, firm to hard, subblocky
		70	SANDSTONE: Very light grey to medium grey, dominantly fine quartz sand, occasional very fine, moderately sorted, subangular to subrounded, strong siliceous cement, trace weak to strong calcareous cement, slightly to very calcareous, trace white argillaceous matrix, friable to moderately hard, common very hard, poor inferred porosity, no shows.
3615	3618	50	SILTSTONE: Medium dark grey to brownish grey, argillaceous in part, arenaceous, grading to fine SANDSTONE, slightly calcareous in part, trace carbonaceous specks and laminations, sticky in part, firm to hard, subblocky
		50	SANDSTONE: Very light grey to medium grey, fine to medium quartz sand, moderately sorted, subangular to subrounded, strong siliceous cement, very common strong calcareous cement, slightly to very calcareous, trace white argillaceous matrix, friable to moderately hard, common very hard, poor inferred porosity, no shows.
3618	3621	70	SILTSTONE: Medium dark grey to brownish grey, argillaceous in part, arenaceous, grading to fine SANDSTONE, slightly calcareous in part, trace carbonaceous specks and laminations, sticky in part, firm to hard, subblocky
		30	SANDSTONE: Very light grey to medium grey, fine to medium quartz sand, moderately sorted, subangular to subrounded, strong siliceous cement, very common strong calcareous cement, slightly to very calcareous, trace white argillaceous matrix, friable to moderately hard, common very hard, poor inferred porosity, no shows.

Depth From	Depth To	Lithology %	Description
3621	3624	80 20	SILTSTONE: Medium dark grey to brownish grey, argillaceous in part, arenaceous, grading to fine SANDSTONE, slightly calcareous in part, trace carbonaceous specks and laminations, sticky in part, firm to hard, subblocky SANDSTONE: Very light grey to medium grey, fine to medium quartz sand, moderately sorted, subangular to subrounded, strong siliceous cement, very common strong calcareous cement, slightly to very calcareous, trace white argillaceous matrix, trace loose coarse quartz grains, friable to moderately hard, common very hard, poor inferred porosity, no shows.
3624	3627	80 20	SILTSTONE: Medium dark grey to brownish grey, argillaceous in part, arenaceous, grading to fine SANDSTONE, slightly calcareous in part, trace carbonaceous specks and laminations, sticky in part, firm to hard, subblocky SANDSTONE: Very light grey to medium grey, fine to medium quartz sand, moderately sorted, subangular to subrounded, strong siliceous cement, very common strong calcareous cement, slightly to very calcareous, trace white argillaceous matrix, trace loose coarse quartz grains, friable to moderately hard, common very hard, poor inferred porosity, no shows.
3627	3630	80 20	SILTSTONE: Medium dark grey to brownish grey, argillaceous in part, arenaceous, grading to fine SANDSTONE, slightly calcareous in part, trace carbonaceous specks and laminations, sticky in part, firm to hard, subblocky SANDSTONE: Very light grey to medium grey, fine to medium quartz sand, moderately sorted, subangular to subrounded, strong siliceous cement, very common strong calcareous cement, slightly to very calcareous, trace white argillaceous matrix, trace pyrite, trace loose coarse quartz grains, friable to moderately hard, common very hard, poor inferred porosity, no shows.
3630	3633	30 70	SILTSTONE: Medium dark grey to brownish grey, argillaceous in part, arenaceous, grading to fine SANDSTONE, slightly calcareous in part, trace carbonaceous specks and laminations, sticky in part, firm to hard, subblocky SANDSTONE: Very light grey to medium grey, fine to medium quartz sand, moderately sorted, subangular to subrounded, strong siliceous cement, very common strong calcareous cement, slightly to very calcareous, trace white argillaceous matrix, trace pyrite, trace loose coarse quartz grains, friable to moderately hard, common very hard, poor inferred porosity, no shows.

Depth From	Depth To	Lithology %	Description
3633	3636	40	SILTSTONE: Medium dark grey to brownish grey, argillaceous in part, arenaceous, grading to fine SANDSTONE, slightly calcareous in part, trace carbonaceous specks and laminations, sticky in part, firm to hard, subblocky
		60	SANDSTONE: Very light grey to medium grey, fine to medium quartz sand, moderately sorted, subangular to subrounded, strong siliceous cement, very common strong calcareous cement, slightly to very calcareous, trace white argillaceous matrix, trace pyrite, trace loose coarse quartz grains, friable to moderately hard, common very hard, poor inferred porosity, no shows.
3636	3639	60	SILTSTONE: Medium dark grey to brownish grey, argillaceous in part, arenaceous, grading to fine SANDSTONE, slightly calcareous in part, trace carbonaceous specks and laminations, sticky in part, firm to hard, subblocky
		40	SANDSTONE: Very light grey to medium grey, fine to medium quartz sand, moderately sorted, subangular to subrounded, strong siliceous cement, very common strong calcareous cement, slightly to very calcareous, trace white argillaceous matrix, trace pyrite, trace loose coarse quartz grains, friable to moderately hard, common very hard, poor inferred porosity, no shows.
3639	3642	60	SILTSTONE: Medium dark grey to brownish grey, argillaceous in part, arenaceous, grading to fine SANDSTONE, slightly calcareous in part, trace carbonaceous specks and laminations, sticky in part, firm to hard, subblocky
		40	SANDSTONE: Very light grey to medium grey, fine to medium quartz sand, poor sorted, subangular to subrounded, strong siliceous cement, very common strong calcareous cement, slightly to very calcareous, trace white argillaceous matrix, trace pyrite, trace loose coarse quartz grains, friable to moderately hard, common very hard, poor inferred porosity, no shows.
3642	3645	60	SILTSTONE: Medium dark grey to brownish grey, argillaceous in part, arenaceous, grading to fine SANDSTONE, slightly calcareous in part, trace glauconite, trace carbonaceous specks and laminations, sticky in part, firm to hard, subblocky
		40	SANDSTONE: Very light grey to medium grey, fine to medium quartz sand, poorly sorted, subangular to subrounded, strong siliceous cement, very common strong calcareous cement, slightly to very calcareous, trace white argillaceous matrix, trace pyrite, trace loose coarse quartz grains, friable to moderately hard, common very hard, poor inferred porosity, no shows.

Depth From	Depth To	Lithology %	Description
3645	3648	70 30	SILTSTONE: Medium dark grey to brownish grey, argillaceous in part, arenaceous, grading to fine SANDSTONE, slightly calcareous in part, trace carbonaceous specks and laminations, sticky in part, firm to hard, subblocky SANDSTONE: Very light grey to medium grey, fine to medium quartz sand, poor sorted, subangular to subrounded, strong siliceous cement, very common strong calcareous cement, slightly to very calcareous, trace white argillaceous matrix, trace pyrite, trace loose coarse quartz grains, friable to moderately hard, common very hard, poor inferred porosity, no shows.
3648	3651	70 30	SILTSTONE: Medium dark grey to brownish grey, argillaceous, arenaceous, grading to CLAYSTONE, trace calcareous, trace carbonaceous specks, firm to soft, subblocky. SANDSTONE: White to very light grey, medium to fine quartz sand, poor sorted, subangular to subrounded, strong siliceous cement, white argillaceous matrix, common carbonaceous specks, poor to tight visual porosity, no shows.
3651	3654	70 30	SILTSTONE: Medium dark grey to brownish grey, argillaceous, arenaceous, grading to CLAYSTONE, trace calcareous, trace carbonaceous specks, firm to soft, subblocky. SANDSTONE: White to very light grey, medium to fine quartz sand, poor sorted, subangular to subrounded, strong siliceous cement, white argillaceous matrix, common carbonaceous specks, poor to tight visual porosity, no shows.
3654	3657	70 30	SILTSTONE: Medium dark grey to brownish grey, argillaceous, arenaceous, grading to CLAYSTONE, trace calcareous, trace carbonaceous specks, firm to soft, subblocky. SANDSTONE: White to very light grey, medium to fine quartz sand, poor sorted, subangular to subrounded, strong siliceous cement, white argillaceous matrix, common carbonaceous specks, poor to tight visual porosity, no shows.
3657	3660	90 10	SILTSTONE: Medium dark grey to brownish grey, argillaceous, arenaceous, grading to CLAYSTONE, trace calcareous, trace carbonaceous specks, firm to soft, subblocky. SANDSTONE: White to very light grey, medium to fine quartz sand, poor sorted, subangular to subrounded, strong siliceous cement, white argillaceous matrix, common carbonaceous specks, poor to tight visual porosity, no shows.
3660	3663	80 20	SILTSTONE: Medium dark grey to brownish grey, argillaceous, arenaceous, grading to CLAYSTONE, trace calcareous, trace carbonaceous specks, firm to soft, subblocky. SANDSTONE: White to very light grey, medium to fine quartz sand, poor sorted, subangular to subrounded, strong siliceous cement, white argillaceous matrix, common carbonaceous specks, poor to tight visual porosity, no shows.

Depth From	Depth To	Lithology %	Description
3663	3666	80 20	SILTSTONE: Medium dark grey to brownish grey, argillaceous, arenaceous, grading to CLAYSTONE, trace calcareous, trace carbonaceous specks, firm to soft, subblocky. SANDSTONE: White to very light grey, medium to fine quartz sand, poor sorted, subangular to subrounded, strong siliceous cement, white argillaceous matrix, common carbonaceous specks, poor to tight visual porosity, no shows.
3666	3669	80 20	SILTSTONE: Medium dark grey to brownish grey, argillaceous, arenaceous, grading to CLAYSTONE, trace calcareous, trace carbonaceous specks, firm to soft, subblocky. SANDSTONE: White to very light grey, medium to fine quartz sand, poor sorted, subangular to subrounded, strong siliceous cement, white argillaceous matrix, common carbonaceous specks, poor to tight visual porosity, no shows.
3669	3672	80 20	SILTSTONE: Medium dark grey to brownish grey, argillaceous, arenaceous, grading to CLAYSTONE, trace calcareous, trace carbonaceous specks, firm to soft, subblocky. SANDSTONE: White to very light grey, medium to fine quartz sand, poor sorted, subangular to subrounded, strong siliceous cement, white argillaceous matrix, common carbonaceous specks, poor to tight visual porosity, no shows.
3672	3675	60 40	SILTSTONE: Medium dark grey to brownish grey, argillaceous, arenaceous, grading to CLAYSTONE, trace calcareous, trace carbonaceous specks, firm to soft, subblocky. SANDSTONE: White to very light grey, medium to fine quartz sand, poor sorted, subangular to subrounded, strong siliceous cement, white argillaceous matrix, common carbonaceous specks, poor to tight visual porosity, no shows.
3675	3678	80 20	SILTSTONE: Medium dark grey to brownish grey, argillaceous, arenaceous, grading to CLAYSTONE, trace calcareous, trace carbonaceous specks, firm to soft, subblocky. SANDSTONE: White to very light grey, medium to fine quartz sand, poor sorted, subangular to subrounded, strong siliceous cement, white argillaceous matrix, common carbonaceous specks, poor to tight visual porosity, no shows.
3678	3681	90 10	SILTSTONE: Medium dark grey to brownish grey, argillaceous, arenaceous, grading to CLAYSTONE, trace calcareous, trace carbonaceous specks, firm to soft, subblocky. SANDSTONE: White to very light grey, medium to fine quartz sand, poor sorted, subangular to subrounded, strong siliceous cement, white argillaceous matrix, common carbonaceous specks, poor to tight visual porosity, no shows.

Depth From	Depth To	Lithology %	Description
3681	3684	70	SILTSTONE: Medium dark grey to brownish grey, argillaceous, arenaceous, grading to CLAYSTONE, trace calcareous, trace carbonaceous specks, firm to soft, subblocky.
		30	SANDSTONE: White to very light grey, medium to fine quartz sand, poor sorted, subangular to subrounded, strong siliceous cement, white argillaceous matrix, common carbonaceous specks, poor to tight visual porosity, no shows.
3684	3687	80	SILTSTONE: Medium dark grey to brownish grey, argillaceous, arenaceous, grading to CLAYSTONE, trace calcareous, trace carbonaceous specks, firm to soft, subblocky.
		15	SANDSTONE: White to very light grey, medium to fine quartz sand, poor sorted, subangular to subrounded, strong siliceous cement, white argillaceous matrix, common carbonaceous specks, poor to tight visual porosity, no shows.
		5	COAL: Black, vitreous, sub vitreous, friable, subblocky.
3687	3690	90	SILTSTONE: Medium dark grey to brownish grey, argillaceous, arenaceous, grading to CLAYSTONE, trace calcareous, trace carbonaceous specks, firm to soft, subblocky.
		10	SANDSTONE: White to very light grey, medium to fine quartz sand, poor sorted, subangular to subrounded, strong siliceous cement, white argillaceous matrix, common carbonaceous specks, poor to tight visual porosity, no shows.
3690	3693	70	SILTSTONE: Generally dark brown to dark grey, argillaceous, arenaceous, grading to very fine SANDSTONE, slightly calcareous, trace to common carbonaceous specks, firm, sub-blocky, soft
		30	SANDSTONE: White to very light grey, clear, very fine to fine quartz sand, moderate to poor sorted, subrounded, slightly strong siliceous cement, white argillaceous matrix in part, common carbonaceous specks, loose quartz, poor to moderate visual porosity, no shows.
3693	3696	5	SILTSTONE: Generally dark brown to dark grey, argillaceous, arenaceous, grading to very fine SANDSTONE, slightly calcareous, trace to common carbonaceous specks, firm, sub-blocky, soft
		95	SANDSTONE: White to very light grey, clear, very fine to fine quartz sand, moderate to poor sorted, subrounded, slightly strong siliceous cement, white argillaceous matrix in part, common carbonaceous specks, loose quartz, poor to moderate visual porosity, no shows.

Depth From	Depth To	Lithology %	Description
3696	3699	5	SILTSTONE: Generally dark brown to dark grey, argillaceous, arenaceous, grading to very fine SANDSTONE, slightly calcareous, trace to common carbonaceous specks, firm, sub-blocky, soft
		95	SANDSTONE: White to very light grey, clear, very fine to fine quartz sand, moderate to poor sorted, subrounded, slightly strong siliceous cement, white argillaceous matrix in part, common carbonaceous specks, loose quartz, poor to moderate visual porosity, no shows.
3699	3702	70	SILTSTONE: Generally dark brown to dark grey, argillaceous, arenaceous, grading to very fine SANDSTONE, slightly calcareous, trace to common carbonaceous specks, firm, sub-blocky, soft
		30	SANDSTONE: White to very light grey, clear, very fine to fine quartz sand, moderate to poor sorted, subrounded, slightly strong siliceous cement, white argillaceous matrix in part, common carbonaceous specks, loose quartz, poor to moderate visual porosity, no shows.
3702	3705	70	SILTSTONE: Generally dark brown to dark grey, argillaceous, arenaceous, grading to very fine SANDSTONE, slightly calcareous, trace to common carbonaceous specks, firm, sub-blocky, soft
		30	SANDSTONE: White to very light grey, clear, very fine to fine quartz sand, moderate to poor sorted, subrounded, slightly strong siliceous cement, white argillaceous matrix in part, common carbonaceous specks, loose quartz, poor to moderate visual porosity, no shows.
3705	3708	60	SILTSTONE: Generally dark brown to dark grey, argillaceous, arenaceous, grading to very fine SANDSTONE, slightly calcareous, trace to common carbonaceous specks, firm, sub-blocky, soft
		40	SANDSTONE: Light grey, very fine to fine quartz sand, dominant fine grains, minor medium, moderate well sorting, subangular, common siliceous cement, common white argillaceous matrix, moderate hard to hard, friable in part, poor to tight visual porosity, no shows.
3708	3711	50	SILTSTONE: Generally dark brown to dark grey, argillaceous, arenaceous, grading to very fine SANDSTONE, slightly calcareous, trace to common carbonaceous specks, firm, sub-blocky, soft
		50	SANDSTONE: Light grey, very fine to fine quartz sand, dominant fine grains, minor medium, moderate well sorting, subangular, common siliceous cement, common white argillaceous matrix, moderate hard to hard, friable in part, poor to tight visual porosity, no shows.

Depth From	Depth To	Lithology %	Description
3711	3714	30	SILTSTONE: Generally dark brown to dark grey, argillaceous, arenaceous, grading to very fine SANDSTONE, slightly calcareous, trace to common carbonaceous specks, firm, sub-blocky, soft
		70	SANDSTONE: Light grey, very fine to fine quartz sand, dominantly fine grains, minor medium, moderate well sorting, subangular, common siliceous cement, common white argillaceous matrix, moderate hard to hard, friable in part, poor to tight visual porosity, no shows.
3714	3717	40	SILTSTONE: Generally dark brown to dark grey, argillaceous, arenaceous, grading to very fine SANDSTONE, slightly calcareous, trace to common carbonaceous specks, firm, sub-blocky, soft
		60	SANDSTONE: Light grey, very fine to fine quartz sand, dominantly fine grains, minor medium, moderate well sorting, subangular, common siliceous cement, common white argillaceous matrix, slightly micro micaceous, moderate hard to hard, friable in part, poor to tight visual porosity, no shows.
3717	3720	50	SILTSTONE: Dark grey to brownish grey, olive grey in part, argillaceous in part, arenaceous, grading to very fine SANDSTONE, rare carbonaceous specks, rare coarse loose quartz grains, non to slightly calcareous, dispersive in part, dominantly firm, subblocky
		50	SANDSTONE: Light grey to medium dark grey, very fine to fine quartz sand, dominantly fine, trace medium, moderately well sorted, subangular to subrounded, common siliceous cement, trace weak to strong calcareous cement, common white argillaceous matrix, moderately hard to hard, poor inferred porosity, no shows.
3720	3723	60	SILTSTONE: Dark grey to brownish grey, olive grey in part, argillaceous in part, arenaceous, grading to very fine SANDSTONE, rare carbonaceous specks, rare coarse loose quartz grains, non to slightly calcareous, dispersive in part, dominantly firm, subblocky
		40	SANDSTONE: Light grey to medium dark grey, very fine to fine quartz sand, dominantly fine, trace medium, moderately well sorted, subangular to subrounded, common siliceous cement, trace weak to strong calcareous cement, common white argillaceous matrix, moderately hard to hard, poor inferred porosity, no shows.

Depth From	Depth To	Lithology %	Description
3723	3726	65	SILTSTONE: Dark grey to brownish grey, olive grey in part, argillaceous in part, arenaceous, grading to very fine SANDSTONE, rare carbonaceous specks, rare coarse loose quartz grains, non to slightly calcareous, dispersive in part, dominantly firm, subblocky
		35	SANDSTONE: Light grey to medium dark grey, very fine to fine quartz sand, dominantly fine, trace medium, moderately well sorted, subangular to subrounded, common siliceous cement, trace weak to strong calcareous cement, common white argillaceous matrix, moderately hard to hard, poor inferred porosity, no shows.
3726	3729	60	SILTSTONE: Dark grey to brownish grey, olive grey in part, argillaceous in part, arenaceous, grading to very fine SANDSTONE, rare carbonaceous specks, rare coarse loose quartz grains, non to slightly calcareous, dispersive in part, dominantly firm, subblocky
		40	SANDSTONE: Light grey to medium dark grey, very fine to fine quartz sand, dominantly fine, trace medium, moderately well sorted, subangular to subrounded, common siliceous cement, trace weak to strong calcareous cement, common white argillaceous matrix, moderately hard to hard, poor inferred porosity, no shows.
3729	3732	55	SILTSTONE: Dark grey to brownish grey, olive grey in part, argillaceous in part, arenaceous, grading to very fine SANDSTONE, rare carbonaceous specks, rare coarse loose quartz grains, non to slightly calcareous, dispersive in part, dominantly firm, subblocky
		45	SANDSTONE: Light grey to medium dark grey, very fine to fine quartz sand, dominantly fine, trace medium, moderately well sorted, subangular to subrounded, common siliceous cement, trace weak to strong calcareous cement, common white argillaceous matrix, moderately hard to hard, poor inferred porosity, no shows.
3732	3735	50	SILTSTONE: Dark grey to brownish grey, olive grey in part, argillaceous in part, arenaceous, grading to very fine SANDSTONE, rare carbonaceous specks, rare coarse loose quartz grains, non to slightly calcareous, dispersive in part, dominantly firm, subblocky
		50	SANDSTONE: Light grey to medium dark grey, very fine to fine quartz sand, dominantly fine, trace medium, moderately well sorted, subangular to subrounded, common siliceous cement, trace weak to strong calcareous cement, common white argillaceous matrix, moderately hard to hard, poor to tight inferred porosity, no shows.

Depth From	Depth To	Lithology %	Description
3735	3738	30	SILTSTONE: Dark grey to brownish grey, olive grey in part, argillaceous in part, arenaceous, grading to very fine SANDSTONE, rare carbonaceous specks, rare coarse loose quartz grains, non to slightly calcareous, dispersive in part, dominantly firm, subblocky
		70	SANDSTONE: Light grey to medium dark grey, very fine to fine quartz sand, dominantly fine, trace medium, moderately well sorted, subangular to subrounded, common siliceous cement, trace weak to strong calcareous cement, common white argillaceous matrix, moderately hard to hard, poor to tight inferred porosity, no shows.
3738	3741	25	SILTSTONE: Dark grey to brownish grey, olive grey in part, argillaceous in part, arenaceous, grading to very fine SANDSTONE, trace carbonaceous specks and micro laminations, rare coarse loose quartz grains, non to slightly calcareous, dispersive in part, dominantly firm, subblocky
		75	SANDSTONE: Light grey to medium dark grey, very fine to fine quartz sand, dominantly fine, trace medium, moderately well sorted, subangular to subrounded, common siliceous cement, trace weak to strong calcareous cement, common white argillaceous matrix, moderately hard to hard, poor to tight inferred porosity, no shows.
3741	3744	30	SILTSTONE: Dark grey to brownish grey, olive grey in part, argillaceous in part, arenaceous, grading to very fine SANDSTONE, trace carbonaceous specks and micro laminations, rare coarse loose quartz grains, non to slightly calcareous, dispersive in part, dominantly firm, subblocky
		70	SANDSTONE: Light grey to medium dark grey, very fine to fine quartz sand, dominantly fine, trace medium, moderately well sorted, subangular to subrounded, common siliceous cement, trace weak to strong calcareous cement, common white argillaceous matrix, moderately hard to hard, poor to tight inferred porosity, no shows.
3744	3747	20	SILTSTONE: Dark grey to brownish grey, olive grey in part, argillaceous in part, arenaceous, grading to very fine SANDSTONE, trace carbonaceous specks and micro laminations, rare coarse loose quartz grains, non to slightly calcareous, dispersive in part, dominantly firm, subblocky
		80	SANDSTONE: Light grey to medium dark grey, very fine to fine quartz sand, dominantly fine, trace medium, moderately well sorted, subangular to subrounded, common siliceous cement, common white very calcareous argillaceous matrix, moderately hard to hard, poor to tight inferred porosity, no shows.

Depth From	Depth To	Lithology %	Description
3747	3750	40	SILTSTONE: Dark grey to brownish grey, olive grey in part, argillaceous in part, arenaceous, grading to very fine SANDSTONE, trace carbonaceous specks and micro laminations, rare coarse loose quartz grains, non to slightly calcareous, dispersive in part, dominantly firm, subblocky
		60	SANDSTONE: Light grey to medium dark grey, very fine to fine quartz sand, dominantly fine, trace medium, moderately well sorted, subangular to subrounded, common siliceous cement, common white very calcareous argillaceous matrix, moderately hard to hard, poor to tight inferred porosity, no shows.
3750	3753	30	SILTSTONE: Dark grey to brownish grey, olive grey in part, argillaceous in part, arenaceous, grading to very fine SANDSTONE, trace carbonaceous specks and micro laminations, rare coarse loose quartz grains, non to slightly calcareous, dispersive in part, dominantly firm, subblocky
		70	SANDSTONE: Light grey to medium dark grey, very fine to fine quartz sand, dominantly fine, trace medium, moderately well sorted, subangular to subrounded, common siliceous cement, common white very calcareous argillaceous matrix, moderately hard to hard, poor to tight inferred porosity, no shows.
3753	3756	50	SILTSTONE: Dark grey to brownish grey, olive grey in part, argillaceous in part, arenaceous, grading to very fine SANDSTONE, trace carbonaceous specks and micro laminations, rare coarse loose quartz grains, non to slightly calcareous, dispersive in part, dominantly firm, subblocky
		50	SANDSTONE: Light grey to medium dark grey, very fine to fine quartz sand, dominantly fine, trace medium, moderately well sorted, subangular to subrounded, common siliceous cement, common white very calcareous argillaceous matrix, moderately hard to hard, poor to tight inferred porosity, no shows.
3756	3759	50	SILTSTONE: Dark grey to brownish grey, olive grey in part, argillaceous in part, arenaceous, grading to very fine SANDSTONE, trace carbonaceous specks and micro laminations, rare coarse loose quartz grains, non to slightly calcareous, dispersive in part, dominantly firm, subblocky
		50	SANDSTONE: Light grey to medium dark grey, very fine to fine quartz sand, dominantly fine, trace medium, moderately well sorted, subangular to subrounded, common siliceous cement, common white very calcareous argillaceous matrix, moderately hard to hard, poor to tight inferred porosity, no shows.

Depth From	Depth To	Lithology %	Description
3759	3762	40	SILTSTONE: Dark grey to brownish grey, olive grey in part, argillaceous in part, arenaceous, grading to very fine SANDSTONE, trace carbonaceous specks and micro laminations, rare coarse loose quartz grains, non to slightly calcareous, dispersive in part, dominantly firm, subblocky
		60	SANDSTONE: Light grey to medium dark grey, very fine to fine quartz sand, dominantly fine, trace medium, moderately well sorted, subangular to subrounded, common siliceous cement, common white very calcareous argillaceous matrix, moderately hard to hard, poor to tight inferred porosity, no shows.
3762	3765	50	SILTSTONE: Dark grey to brownish grey, olive grey in part, argillaceous in part, arenaceous, grading to very fine SANDSTONE, trace carbonaceous specks and micro laminations, rare coarse loose quartz grains, non to slightly calcareous, dispersive in part, dominantly firm, subblocky
		50	SANDSTONE: Light grey to medium dark grey, very fine to fine quartz sand, dominantly fine, trace medium, moderately well sorted, subangular to subrounded, common siliceous cement, common white very calcareous argillaceous matrix, moderately hard to hard, poor to tight inferred porosity, no shows.
3765	3768	20	SILTSTONE: Dark grey to brownish grey, olive grey in part, argillaceous in part, arenaceous, grading to very fine SANDSTONE, trace carbonaceous specks and micro laminations, rare coarse loose quartz grains, non to slightly calcareous, dispersive in part, dominantly firm, subblocky
		80	SANDSTONE: Light grey to medium dark grey, very fine to fine quartz sand, dominantly fine, trace medium, moderately well sorted, subangular to subrounded, common siliceous cement, common white very calcareous argillaceous matrix, trace of calcite grains, trace carbonaceous specks, moderately hard to hard, poor to tight inferred porosity, no shows.
3768	3771	15	SILTSTONE: Dark grey to brownish grey, olive grey in part, argillaceous in part, arenaceous, grading to very fine SANDSTONE, trace carbonaceous specks and micro laminations, rare coarse loose quartz grains, non to slightly calcareous, dispersive in part, dominantly firm, subblocky
		85	SANDSTONE: Light grey to medium dark grey, very fine to fine quartz sand, dominantly fine, trace medium, moderately well sorted, subangular to subrounded, common strong siliceous cement, common light brown very calcareous argillaceous matrix, trace of calcite grains, trace carbonaceous specks, moderately hard to hard, poor to tight inferred porosity, no shows.

Depth From	Depth To	Lithology %	Description
3771	3774	30	SILTSTONE: Dark grey to brownish grey, olive grey in part, argillaceous in part, arenaceous, grading to very fine SANDSTONE, trace carbonaceous specks and micro laminations, rare coarse loose quartz grains, non to slightly calcareous, dispersive in part, dominantly firm, subblocky
		70	SANDSTONE: Light grey to medium dark grey, very fine to fine quartz sand, dominantly fine, trace medium, moderately well sorted, subangular to subrounded, common strong siliceous cement, common light brown very calcareous argillaceous matrix, trace of calcite grains, trace carbonaceous specks, moderately hard to hard, poor to tight inferred porosity, no shows.
3774	3777	50	SILTSTONE: Dark grey to brownish grey, olive grey in part, argillaceous in part, arenaceous, grading to very fine SANDSTONE, trace carbonaceous specks and micro laminations, rare coarse loose quartz grains, non to slightly calcareous, dispersive in part, dominantly firm, subblocky
		50	SANDSTONE: Light grey to medium dark grey, very fine to fine quartz sand, dominantly fine, trace medium, moderately well sorted, subangular to subrounded, common strong siliceous cement, common light brown very calcareous argillaceous matrix, trace of calcite grains, trace carbonaceous specks, moderately hard to hard, poor to tight inferred porosity, no shows.
3777	3780	50	SILTSTONE: Dark grey to brownish grey, olive grey in part, argillaceous in part, arenaceous, grading to very fine SANDSTONE, trace carbonaceous specks and micro laminations, rare coarse loose quartz grains, non to slightly calcareous, dispersive in part, dominantly firm, subblocky
		50	SANDSTONE: Light grey to medium dark grey, very fine to fine quartz sand, dominantly fine, trace medium, moderately well sorted, subangular to subrounded, common strong siliceous cement, common light brown very calcareous argillaceous matrix, trace of calcite grains, trace carbonaceous specks, moderately hard to hard, poor to tight inferred porosity, no shows.
3780	3783	55	SILTSTONE: Dark grey to brownish grey, olive grey in part, argillaceous in part, arenaceous, grading to very fine SANDSTONE, trace carbonaceous specks and micro laminations, rare coarse loose quartz grains, non to slightly calcareous, dispersive in part, dominantly firm, subblocky
		45	SANDSTONE: Light grey to medium dark grey, very fine to fine quartz sand, dominantly fine, trace medium, moderately well sorted, subangular to subrounded, common strong siliceous cement, common light brown very calcareous argillaceous matrix, rare loose coarse quartz grains, trace of calcite grains, trace carbonaceous specks, moderately hard to hard, poor to tight inferred porosity, no shows.

Depth From	Depth To	Lithology %	Description
3783	3786	60	SILTSTONE: Dark grey to brownish grey, olive grey in part, argillaceous in part, arenaceous, grading to very fine SANDSTONE, trace carbonaceous specks and micro laminations, rare coarse loose quartz grains, non to slightly calcareous, dispersive in part, dominantly firm, subblocky
		40	SANDSTONE: Light grey to medium dark grey, very fine to fine quartz sand, dominantly fine, trace medium, moderately well sorted, subangular to subrounded, common strong siliceous cement, common light brown very calcareous argillaceous matrix, trace of calcite grains, trace carbonaceous specks, moderately hard to hard, poor to tight inferred porosity, no shows.
3786	3789	70	SILTSTONE: Dark grey to brownish grey, olive grey in part, argillaceous in part, arenaceous, grading to very fine SANDSTONE, trace carbonaceous specks and micro laminations, rare coarse loose quartz grains, non to slightly calcareous, dispersive in part, dominantly firm, subblocky
		30	SANDSTONE: Light grey to medium dark grey, very fine to fine quartz sand, dominantly fine, trace medium, moderately well sorted, subangular to subrounded, strong siliceous cement, occasional weak siliceous cement, common light brown very calcareous argillaceous matrix, trace of calcite grains, trace carbonaceous specks, moderately hard to hard, poor to tight inferred porosity, no shows.
3789	3792	75	SILTSTONE: Dark grey to brownish grey, olive grey in part, argillaceous in part, arenaceous, grading to very fine SANDSTONE, trace carbonaceous specks and micro laminations, rare coarse loose quartz grains, non to slightly calcareous, dispersive in part, dominantly firm, subblocky
		25	SANDSTONE: Light grey to medium dark grey, very fine to fine quartz sand, dominantly fine, trace medium, moderately well sorted, subangular to subrounded, strong siliceous cement, occasional weak siliceous cement, common light brown very calcareous argillaceous matrix, trace of calcite grains, trace carbonaceous specks, moderately hard to hard, poor to tight inferred porosity, no shows.
3792	3795	40	SILTSTONE: Dark grey to brownish grey, olive grey in part, argillaceous in part, arenaceous, grading to very fine SANDSTONE, trace carbonaceous specks and micro laminations, rare coarse loose quartz grains, non to slightly calcareous, dispersive in part, dominantly firm, subblocky
		60	SANDSTONE: Light grey to medium dark grey, very fine to fine quartz sand, dominantly fine, trace medium, moderately well sorted, subangular to subrounded, strong siliceous cement, occasional weak siliceous cement, common light brown very calcareous argillaceous matrix, trace of calcite grains, trace carbonaceous specks, moderately hard to hard, poor to tight inferred porosity, no shows.

Depth From	Depth To	Lithology %	Description
3795	3798	40 60	SILTSTONE: Medium dark grey to brownish grey, minor dark grey, argillaceous in part, common arenaceous, grading to very fine SANDSTONE, non calcareous, trace carbonaceous specks, dominantly firm, dispersive to soft in part, subblocky to blocky SANDSTONE: Light grey to medium grey, very fine to fine quartz sand, predominantly loose quartz grains, moderately well sorted, subangular to subrounded, common moderate siliceous cement, common calcareous light brown argillaceous matrix, common calcite grains, trace black lithics, trace micro mica, trace carbonaceous specks, moderately hard to hard, friable in places, poor inferred porosity, common mineral fluorescence, no shows.
3798	3801	25 75	SILTSTONE: Medium dark grey to brownish grey, minor dark grey, argillaceous in part, common arenaceous, grading to very fine SANDSTONE, non calcareous, trace carbonaceous specks, dominantly firm, dispersive to soft in part, subblocky to blocky SANDSTONE: Light grey to medium grey, very fine to fine quartz sand, predominantly loose quartz grains, moderately well sorted, subangular to subrounded, common moderate siliceous cement, common calcareous light brown argillaceous matrix, common calcite grains, trace black lithics, trace micro mica, trace carbonaceous specks, moderately hard to hard, friable in places, poor inferred porosity, common mineral fluorescence, no shows.
3801	3804	20 80	SILTSTONE: Medium dark grey to brownish grey, minor dark grey, argillaceous in part, common arenaceous, grading to very fine SANDSTONE, non calcareous, trace carbonaceous specks, dominantly firm, dispersive to soft in part, subblocky to blocky SANDSTONE: Light grey to medium grey, very fine to fine quartz sand, predominantly loose quartz grains, moderately well sorted, subangular to subrounded, common moderate siliceous cement, common calcareous light brown argillaceous matrix, common calcite grains, trace black lithics, trace carbonaceous specks, moderately hard to hard, friable in places, poor inferred porosity, common mineral fluorescence, no shows.
3804	3807	25 75	SILTSTONE: Medium dark grey to brownish grey, minor dark grey, argillaceous in part, common arenaceous, grading to very fine SANDSTONE, non calcareous, trace carbonaceous specks, dominantly firm, dispersive to soft in part, subblocky to blocky SANDSTONE: Light grey to medium grey, very fine to fine quartz sand, predominantly loose quartz grains, moderately well sorted, subangular to subrounded, common moderate siliceous cement, common calcareous light brown argillaceous matrix, common calcite grains, trace black lithics, trace carbonaceous specks, moderately hard to hard, friable in places, poor inferred porosity, common mineral fluorescence, no shows.

Depth From	Depth To	Lithology %	Description
3807	3810	30 70	SILTSTONE: Medium dark grey to brownish grey, minor dark grey, argillaceous in part, common arenaceous, grading to very fine SANDSTONE, non calcareous, trace carbonaceous specks, dominantly firm, dispersive to soft in part, subblocky SANDSTONE: Light grey to medium grey, very fine to fine quartz sand, predominantly loose quartz grains, moderately well sorted, subangular to subrounded, common moderate siliceous cement, common calcareous light brown argillaceous matrix, common calcite grains, trace black lithics, trace carbonaceous specks, moderately hard to hard, friable in places, poor inferred porosity, common mineral fluorescence, no shows.
3810	3813	35 65	SILTSTONE: Medium dark grey to brownish grey, minor dark grey, argillaceous in part, common arenaceous, grading to very fine SANDSTONE, non calcareous, trace carbonaceous specks, dominantly firm, dispersive to soft in part, subblocky SANDSTONE: Light grey to medium grey, very fine to fine quartz sand, predominantly loose quartz grains, moderately well sorted, subangular to subrounded, common moderate siliceous cement, common calcareous light brown argillaceous matrix, common calcite grains, trace black lithics, trace carbonaceous specks, moderately hard to hard, friable in places, poor inferred porosity, common mineral fluorescence, no shows.
3813	3816	40 60	SILTSTONE: Medium dark grey to brownish grey, minor dark grey, argillaceous in part, common arenaceous, grading to very fine SANDSTONE, non calcareous, trace carbonaceous specks, dominantly firm, dispersive to soft in part, subblocky SANDSTONE: Light grey to medium grey, very fine to fine quartz sand, predominantly loose quartz grains, moderately well sorted, subangular to subrounded, common moderate siliceous cement, common calcareous light brown argillaceous matrix, common calcite grains, trace black lithics, trace carbonaceous specks, moderately hard to hard, friable in places, poor inferred porosity, common mineral fluorescence, no shows.
3816	3819	60 40	SILTSTONE: Medium dark grey to brownish grey, minor dark grey, argillaceous in part, common arenaceous, grading to very fine SANDSTONE, non calcareous, trace carbonaceous specks, dominantly firm, dispersive to soft in part, subblocky SANDSTONE: Light grey to medium grey, very fine to fine quartz sand, occasional medium, common loose quartz grains, moderately well sorted, subangular to subrounded, common moderate siliceous cement, common calcareous light brown argillaceous matrix, common calcite grains, trace black lithics, trace carbonaceous specks, moderately hard to hard, friable in places, poor visual porosity, common mineral fluorescence, no shows.

Depth From	Depth To	Lithology %	Description
3819	3822	70 30	SILTSTONE: Medium dark grey to dark grey, dark olive grey in part, argillaceous and arenaceous, localised weak calcite, trace carbonaceous specks and micro laminations, rare micro mica, firm to moderately hard, subblocky to blocky SANDSTONE: Light grey to medium grey, very fine to fine quartz sand, occasional medium, common loose quartz grains, moderately well sorted, subangular to subrounded, common moderate siliceous cement, common calcareous light brown argillaceous matrix, common calcite grains, trace black lithics, trace carbonaceous specks, moderately hard to hard, friable in places, poor visual porosity, no shows.
3822	3825	75 25	SILTSTONE: Medium dark grey to dark grey, dark olive grey in part, argillaceous and arenaceous, localised weak calcite, trace carbonaceous specks and micro laminations, rare micro mica, firm to moderately hard, subblocky to blocky SANDSTONE: Light grey to medium grey, very fine to fine quartz sand, occasional medium, common loose quartz grains, moderately well sorted, subangular to subrounded, common moderate siliceous cement, common calcareous light brown argillaceous matrix, common calcite grains, trace black lithics, trace carbonaceous specks, moderately hard to hard, friable in places, poor visual porosity, no shows.
3825	3828	70 30	SILTSTONE: Medium dark grey to dark grey, dark olive grey in part, argillaceous and arenaceous, localised weak calcite, trace carbonaceous specks and micro laminations, rare micro mica, firm to moderately hard, subblocky to blocky SANDSTONE: Light grey to medium grey, very fine to fine quartz sand, occasional medium, common loose quartz grains, moderately well sorted, subangular to subrounded, common moderate siliceous cement, common calcareous light brown argillaceous matrix, common calcite grains, trace black lithics, trace carbonaceous specks, moderately hard to hard, friable in places, poor visual porosity, no shows.
3828	3831	80 20	SILTSTONE: Medium dark grey to dark grey, dark olive grey in part, argillaceous and arenaceous, localised weak calcite, trace carbonaceous specks and micro laminations, rare micro mica, firm to moderately hard, subblocky to blocky SANDSTONE: Light grey to medium grey, very fine to fine quartz sand, occasional medium, common loose quartz grains, moderately well sorted, subangular to subrounded, common moderate siliceous cement, common calcareous light brown argillaceous matrix, common calcite grains, trace black lithics, trace carbonaceous specks, moderately hard to hard, friable in places, poor visual porosity, no shows.

Depth From	Depth To	Lithology %	Description
3831	3834	80	SILTSTONE: Medium dark grey to dark grey, dark olive grey in part, argillaceous and arenaceous, localised weak calcite, trace carbonaceous specks and micro laminations, rare micro mica, firm to moderately hard, subblocky to blocky
		20	SANDSTONE: Light grey to medium grey, very fine to fine quartz sand, occasional medium, common loose quartz grains, moderately well sorted, subangular to subrounded, common moderate siliceous cement, common calcareous light brown argillaceous matrix, common calcite grains, trace black lithics, trace carbonaceous specks, moderately hard to hard, friable in places, poor visual porosity, no shows.
3834	3837	75	SILTSTONE: Light grey to brownish grey, dark olive grey in part, argillaceous and arenaceous, localised weak calcite, trace carbonaceous specks and micro laminations, rare micro mica, firm to moderately hard, subblocky to blocky
		25	SANDSTONE: Very light grey to medium grey, very fine to fine quartz sand, occasional medium, common loose quartz grains, moderately well sorted, subangular to subrounded, common moderate siliceous cement, common calcareous light brown argillaceous matrix, trace to common calcite grains, trace black lithics, trace carbonaceous specks, moderately hard to hard, friable in part, poor visual porosity, no shows.
3837	3840	70	SILTSTONE: Light grey to brownish grey, dark olive grey in part, argillaceous and arenaceous, localised weak calcite, trace carbonaceous specks and micro laminations, rare micro mica, firm to moderately hard, subblocky to blocky
		30	SANDSTONE: Very light grey to medium grey, very fine to fine quartz sand, occasional medium, common loose quartz grains, moderately well sorted, subangular to subrounded, common moderate siliceous cement, common calcareous light brown argillaceous matrix, trace to common calcite grains, trace black lithics, trace carbonaceous specks, moderately hard to hard, friable in part, poor visual porosity, no shows.
3840	3843	60	SILTSTONE: Light grey to brownish grey, dark olive grey in part, argillaceous and arenaceous, localised weak calcite, trace carbonaceous specks and micro laminations, rare micro mica, firm to moderately hard, subblocky to blocky
		40	SANDSTONE: Very light grey to medium grey, very fine to fine quartz sand, occasional medium, common loose quartz grains, moderately well sorted, subangular to subrounded, common moderate siliceous cement, common calcareous light brown argillaceous matrix, trace to common calcite grains, trace black lithics, trace carbonaceous specks, moderately hard to hard, friable in part, poor visual porosity, no shows.

Depth From	Depth To	Lithology %	Description
3843	3846	10	SILTSTONE: Light grey to brownish grey, dark olive grey in part, argillaceous and arenaceous, localised weak calcite, trace carbonaceous specks and micro laminations, rare micro mica, firm to moderately hard, subblocky to blocky
		90	SANDSTONE: Light olive grey, clear to translucent, very fine to fine, minor medium grains quartz, moderate sorted, moderate calcareous cement, trace siliceous matrix, trace carbonaceous specks, rare micro mica, trace to 1% lithic fragments, loose, common moderate hard aggregates, poor to tight visual and inferred porosity, no shows.
3846	3849	20	SILTSTONE: Light grey to brownish grey, dark olive grey in part, argillaceous and arenaceous, localised weak calcite, trace carbonaceous specks and micro laminations, rare micro mica, firm to moderately hard, subblocky to blocky
		80	SANDSTONE: Light olive grey, clear to translucent, very fine to fine, minor medium grains quartz, moderate sorted, moderate calcareous cement, trace siliceous matrix, trace carbonaceous specks, rare micro mica, trace to 1% lithic fragments, loose, common moderate hard aggregates, poor to tight visual and inferred porosity, no shows.
3849	3852	40	SILTSTONE: Light grey to brownish grey, dark olive grey in part, argillaceous and arenaceous, localised weak calcite, trace carbonaceous specks and micro laminations, rare micro mica, firm to moderately hard, subblocky to blocky
		60	SANDSTONE: Light olive grey, clear to translucent, very fine to fine, minor medium grains quartz, moderate sorted, moderate calcareous cement, trace siliceous matrix, trace carbonaceous specks, rare micro mica, trace to 1% lithic fragments, loose, common moderate hard aggregates, poor to tight visual and inferred porosity, no shows.
3852	3855	10	SILTSTONE: Light grey to brownish grey, dark olive grey in part, argillaceous and arenaceous, localised weak calcite, trace carbonaceous specks and micro laminations, rare micro mica, firm to moderately hard, subblocky to blocky
		90	SANDSTONE: Light olive grey, clear to translucent, very fine to fine, minor medium grains quartz, moderate sorted, moderate calcareous cement, trace siliceous matrix, trace carbonaceous specks, rare micro mica, trace to 1% lithic fragments, loose, common moderate hard aggregates, poor to tight visual and inferred porosity, no shows.

Depth From	Depth To	Lithology %	Description
3855	3858	5	SILTSTONE: Light grey to brownish grey, dark olive grey in part, argillaceous and arenaceous, localised weak calcite, trace carbonaceous specks and micro laminations, rare micro mica, firm to moderately hard, subblocky to blocky
		95	SANDSTONE: Light olive grey, clear to translucent, very fine to fine, minor medium grains quartz, moderate sorted, moderate calcareous cement, trace siliceous matrix, trace carbonaceous specks, rare micro mica, trace to 1% lithic fragments, loose, common moderate hard aggregates, poor to tight visual and inferred porosity, no shows.
3858	3861	50	SILTSTONE: Light grey to brownish grey, dark olive grey in part, argillaceous and arenaceous, localised weak calcite, trace carbonaceous specks and micro laminations, rare micro mica, firm to moderately hard, subblocky to blocky
		50	SANDSTONE: Light olive grey, clear to translucent, very fine to fine, minor medium grains quartz, moderate sorted, moderate calcareous cement, trace siliceous matrix, trace carbonaceous specks, rare micro mica, trace to 1% lithic fragments, loose, common moderate hard aggregates, poor to tight visual and inferred porosity, no shows.
3861	3864	60	SILTSTONE: Light grey to brownish grey, dark olive grey in part, argillaceous and arenaceous, localised weak calcite, trace carbonaceous specks and micro laminations, rare micro mica, firm to moderately hard, subblocky to blocky
		40	SANDSTONE: Light olive grey, clear to translucent, very fine to fine, minor medium grains quartz, moderate sorted, moderate calcareous cement, trace siliceous matrix, trace carbonaceous specks, rare micro mica, trace to 1% lithic fragments, loose, common moderate hard aggregates, poor to tight visual and inferred porosity, no shows.
3864	3867	70	SILTSTONE: Light grey to brownish grey, dark olive grey in part, argillaceous and arenaceous, localised weak calcite, trace carbonaceous specks and micro laminations, rare micro mica, firm to moderately hard, subblocky to blocky
		30	SANDSTONE: Light olive grey, clear to translucent, very fine to fine, minor medium grains quartz, moderate sorted, moderate calcareous cement, trace siliceous matrix, trace carbonaceous specks, rare micro mica, trace to 1% lithic fragments, loose, common moderate hard aggregates, poor to tight visual and inferred porosity, no shows.

Depth From	Depth To	Lithology %	Description
3867	3870	40	SILTSTONE: Light grey to brownish grey, dark olive grey in part, argillaceous and arenaceous, localised weak calcite, trace carbonaceous specks and micro laminations, rare micro mica, firm to moderately hard, subblocky to blocky
		60	SANDSTONE: Light olive grey, clear to translucent, very fine to fine, minor medium grains quartz, moderate sorted, moderate calcareous cement, trace siliceous matrix, trace carbonaceous specks, rare micro mica, trace to 1% lithic fragments, loose, common moderate hard aggregates, poor to tight visual and inferred porosity, no shows.
3870	3873	20	SILTSTONE: Light grey to brownish grey, dark olive grey in part, argillaceous and arenaceous, localised weak calcite, trace carbonaceous specks and micro laminations, rare micro mica, firm to moderately hard, subblocky to blocky
		80	SANDSTONE: Light olive grey, clear to translucent, very fine to fine, minor medium grains quartz, moderate sorted, moderate calcareous cement, trace siliceous matrix, trace carbonaceous specks, rare micro mica, trace to 1% lithic fragments, loose, common moderate hard aggregates, poor to tight visual and inferred porosity, no shows.
3873	3876	40	SILTSTONE: Medium to medium dark grey, brownish grey to medium bluish grey, in part light olive grey to olive grey, arenaceous to argillaceous, non to weak calcareous, trace to common carbonaceous specks, trace micro-mica, firm to moderately hard, sub-blocky to blocky
		60	SANDSTONE: Light olive grey, clear to translucent, very fine to fine, minor medium grains quartz, moderate sorted, moderate calcareous cement, trace siliceous matrix, trace carbonaceous specks, rare micro mica, trace to 1% lithic fragments, loose, common moderate hard aggregates, poor to tight visual and inferred porosity, no shows.
3876	3879	50	SILTSTONE: Medium to medium dark grey, brownish grey to medium bluish grey, in part light olive grey to olive grey, arenaceous to argillaceous, non to weak calcareous, trace to common carbonaceous specks, trace micro-mica, firm to moderately hard, sub-blocky to blocky
		50	SANDSTONE: Light olive grey, clear to translucent, very fine to fine, minor medium grains quartz, moderate sorted, moderate calcareous cement, trace siliceous matrix, trace carbonaceous specks, rare micro mica, trace to 1% lithic fragments, loose, common moderate hard aggregates, poor to tight visual and inferred porosity, no shows.

Depth From	Depth To	Lithology %	Description
3879	3882	60	SILTSTONE: Medium to medium dark grey, brownish grey to medium bluish grey, in part light olive grey to olive grey, arenaceous to argillaceous, non to weak calcareous, trace to common carbonaceous specks, trace micro-mica, firm to moderately hard, sub-blocky to blocky
		40	SANDSTONE: Light olive grey, clear to translucent, very fine to fine, minor medium grains quartz, moderate sorted, moderate calcareous cement, trace siliceous matrix, trace carbonaceous specks, rare micro mica, trace to 1% lithic fragments, loose, common moderate hard aggregates, poor to tight visual and inferred porosity, no shows.
3882	3885	60	SILTSTONE: Medium to medium dark grey, brownish grey to medium bluish grey, in part light olive grey to olive grey, arenaceous to argillaceous, non to weak calcareous, trace to common carbonaceous specks, trace micro-mica, firm to moderately hard, sub-blocky to blocky
		40	SANDSTONE: Light olive grey, clear to translucent, very fine to fine, minor medium grains quartz, moderate sorted, moderate calcareous cement, trace siliceous matrix, trace carbonaceous specks, rare micro mica, trace to 1% lithic fragments, loose, common moderate hard aggregates, poor to tight visual and inferred porosity, no shows.
3885	3888	30	SILTSTONE: Medium to medium dark grey, brownish grey to medium bluish grey, in part light olive grey to olive grey, arenaceous to argillaceous, non to weak calcareous, trace to common carbonaceous specks, trace micro-mica, firm to moderately hard, sub-blocky to blocky
		70	SANDSTONE: Light olive grey, clear to translucent, very fine to fine, minor medium grains quartz, moderate sorted, moderate calcareous cement, trace siliceous matrix, trace carbonaceous specks, rare micro mica, trace to 1% lithic fragments, loose, common moderate hard aggregates, poor to tight visual and inferred porosity, no shows.
3888	3891	60	SILTSTONE: Medium to medium dark grey, brownish grey to medium bluish grey, in part light olive grey to olive grey, arenaceous to argillaceous, non to weak calcareous, trace to common carbonaceous specks, trace micro-mica, firm to moderately hard, sub-blocky to blocky
		40	SANDSTONE: Light olive grey, clear to translucent, very fine to fine, minor medium grains quartz, moderate sorted, moderate calcareous cement, trace siliceous matrix, trace carbonaceous specks, rare micro mica, trace to 1% lithic fragments, loose, common moderate hard aggregates, poor to tight visual and inferred porosity, no shows.

Depth From	Depth To	Lithology %	Description
3891	3894	50	SILTSTONE: Medium to medium dark grey, brownish grey to medium bluish grey, in part light olive grey to olive grey, arenaceous to argillaceous, non to weak calcareous, trace to common carbonaceous specks, trace micro-mica, firm to moderately hard, sub-blocky to blocky
		50	SANDSTONE: Light olive grey, clear to translucent, very fine to fine, minor medium grains quartz, moderate sorted, moderate calcareous cement, trace siliceous matrix, trace carbonaceous specks, rare micro mica, trace to 1% lithic fragments, loose, common moderate hard aggregates, poor to tight visual and inferred porosity, no shows.
3894	3897	20	SILTSTONE: Medium to medium dark grey, brownish grey to medium bluish grey, in part light olive grey to olive grey, arenaceous to argillaceous, non to weak calcareous, trace to common carbonaceous specks, trace micro-mica, firm to moderately hard, sub-blocky to blocky
		80	SANDSTONE: Light olive grey, clear to translucent, very fine to fine, minor medium grains quartz, moderate sorted, moderate calcareous cement, trace siliceous matrix, trace carbonaceous specks, rare micro mica, trace to 1% lithic fragments, loose, common moderate hard aggregates, poor to tight visual and inferred porosity, no shows.
3897	3900	60	SILTSTONE: Medium to medium dark grey, brownish grey to medium bluish grey, in part light olive grey to olive grey, arenaceous to argillaceous, non to weak calcareous, trace to common carbonaceous specks, trace micro-mica, firm to moderately hard, sub-blocky to blocky
		40	SANDSTONE: Light olive grey, clear to translucent, very fine to fine, minor medium grains quartz, moderate sorted, moderate calcareous cement, trace siliceous matrix, trace carbonaceous specks, rare micro mica, trace to 1% lithic fragments, loose, common moderate hard aggregates, poor to tight visual and inferred porosity, no shows.
3900	3903	80	SILTSTONE: Medium to medium dark grey, brownish grey to medium bluish grey, in part light olive grey to olive grey, arenaceous to argillaceous, non to weak calcareous, trace to common carbonaceous specks, trace micro-mica, firm to moderately hard, sub-blocky to blocky
		20	SANDSTONE: Light olive grey, clear to translucent, very fine to fine, minor medium grains quartz, moderate sorted, moderate calcareous cement, trace siliceous matrix, trace carbonaceous specks, rare micro mica, trace to 1% lithic fragments, loose, common moderate hard aggregates, poor to tight visual and inferred porosity, no shows.

Depth From	Depth To	Lithology %	Description
3903	3906	80	SILTSTONE: Medium to medium dark grey, brownish grey to medium bluish grey, in part light olive grey to olive grey, arenaceous to argillaceous, non to weak calcareous, trace to common carbonaceous specks, trace micro-mica, firm to moderately hard, sub-blocky to blocky
		20	SANDSTONE: Light olive grey, clear to translucent, very fine to fine, minor medium grains quartz, moderate sorted, moderate calcareous cement, trace siliceous matrix, trace carbonaceous specks, rare micro mica, trace to 1% lithic fragments, loose, common moderate hard aggregates, poor to tight visual and inferred porosity, no shows.
3906	3909	70	SILTSTONE: Medium to medium dark grey, brownish grey to medium bluish grey, in part light olive grey to olive grey, arenaceous to argillaceous, non to weak calcareous, trace to common carbonaceous specks, trace micro-mica, firm to moderately hard, sub-blocky to blocky
		30	SANDSTONE: Light olive grey, clear to translucent, very fine to fine, minor medium grains quartz, moderate sorted, moderate calcareous cement, trace siliceous matrix, trace carbonaceous specks, rare micro mica, trace to 1% lithic fragments, loose, common moderate hard aggregates, poor to tight visual and inferred porosity, no shows.
3909	3912	80	SILTSTONE: Medium to medium dark grey, brownish grey to medium bluish grey, in part light olive grey to olive grey, arenaceous to argillaceous, non to weak calcareous, trace to common carbonaceous specks, trace micro-mica, firm to moderately hard, sub-blocky to blocky
		20	SANDSTONE: Light olive grey, clear to translucent, very fine to fine, minor medium grains quartz, moderate sorted, moderate calcareous cement, trace siliceous matrix, trace carbonaceous specks, rare micro mica, trace to 1% lithic fragments, loose, common moderate hard aggregates, poor to tight visual and inferred porosity, no shows.
3912	3914	90	SILTSTONE: Medium to medium dark grey, brownish grey to medium bluish grey, in part light olive grey to olive grey, arenaceous to argillaceous, non to weak calcareous, trace to common carbonaceous specks, trace micro-mica, firm to moderately hard, sub-blocky to blocky
		10	SANDSTONE: Light olive grey, clear to translucent, very fine to fine, minor medium grains quartz, moderate sorted, moderate calcareous cement, trace siliceous matrix, trace carbonaceous specks, rare micro mica, trace to 1% lithic fragments, loose, common moderate hard aggregates, poor to tight visual and inferred porosity, no shows.

TOTAL DEPTH DRILLER : 3914m
TOTAL DEPTH LOGGER : 3917m

SECTION 2.2: ROTARY SIDEWALL CORES (MSCT) DESCRIPTIONS

SANTOS LIMITED

ROTARY SIDEWALL CORE DESCRIPTION

WELL: CALLISTER 1 DATE: 10/11/2004 PAGE: 1

CORES ATTEMPTED: 26 CORES RECOVERED: 15 (11 good, 4 partial)

GEOLOGIST: R. Subramanian / F. Fernandes

CORE NO.	DEPTH	REC.	PALYN. EVAL. REJECT	LITH.	COLOUR	GRAIN SIZE	HYDR. INDIC. (Y/N)	SUPPLEMENTARY INFORMATION
1	3158.0m	NONE	-	-	-	-	-	
2	3865.0m	NONE	-	-	-	-	-	
3	3858.0m	38mm	-	SANDSTONE	Medium Grey	Very Fine	N	Sub angular to sub rounded grains, weak calcareous cement, trace carbonaceous specks, friable to moderately hard, poor to tight visual porosity.
4	3849.5m	40mm	-	SANDSTONE	Medium to dark grey	Very Fine	N	Sub angular to sub rounded grains, moderate siliceous cement, trace carbonaceous specks, trace feldspars, tight visual porosity.
5	3809.5m	30mm	-	SANDSTONE	Medium to dark grey	Very Fine	N	Sub angular to sub rounded grains, moderate siliceous cement, trace carbonaceous specks, trace feldspars, tight visual porosity. (15mm OF FILTER CAKE)
6	3802.0m	35mm	-	SANDSTONE	Medium to dark grey	Very Fine	N	Sub angular to sub rounded grains, moderate siliceous cement, appears to be grading to a Arenaceous Siltstone, trace carbonaceous specks, trace feldspars, tight visual porosity. (5mm OF FILTER CAKE)
7	3791.0m	5mm	-	SANDSTONE	Light to Medium grey	Very Fine to Fine	N	Strong to moderate siliceous cement, trace carbonaceous specks, trace feldspars, tight visual porosity.

CORE NO.	DEPTH	REC.	PALYN. EVAL. REJECT	LITH.	COLOUR	GRAIN SIZE	HYDR. INDIC. (Y/N)	SUPPLEMENTARY INFORMATION
8	3749.5m	NONE	-	-	-	-	-	-
9	3700.0m	30mm	-	SANDSTONE	Dark grey	Fine to medium	N	Moderate siliceous cement, weak to moderate calcareous cement, common Coal fragments, trace feldspars, tight visual porosity. (Core recovered broken)
10	3695.5m	45mm	-	SANDSTONE	Light to medium grey	Very fine to medium	N	Moderate siliceous cement, weak to moderate calcareous cement, trace carbonaceous fragments, trace feldspars, tight visual porosity. (Core recovered broken)
11	3620.0m	50mm	-	SANDSTONE	Light to medium light grey	Very fine to medium	N	Moderate siliceous cement, weak to moderate calcareous cement, trace to common white argillaceous to silty matrix, trace carbonaceous fragments, trace feldspars, tight visual porosity. (Core recovered broken)
12	3614.0m	15mm	-	SANDSTONE	Light to medium light grey	Very fine to medium	N	Moderate siliceous cement, weak to moderate calcareous cement, trace to common white argillaceous to silty matrix, trace carbonaceous fragments, trace feldspars, rare mica flakes, tight visual porosity. (Core recovered broken)
13	3612.5m	NONE	-	-	-	-	-	-
14	3588.0m	NONE	-	-	-	-	-	-
15	3535.0m	45mm	-	SANDSTONE	Medium Dark grey	Very fine to fine	N	Moderate to strong calcareous cement, trace to common white argillaceous to silty matrix, rare carbonaceous fragments, rare feldspars, rare mica flakes, tight to very tight visual porosity. (Core recovered broken)

CORE NO.	DEPTH	REC.	PALYN. EVAL. REJECT	LITH.	COLOUR	GRAIN SIZE	HYDR. INDIC. (Y/N)	SUPPLEMENTARY INFORMATION
16	3526.5m	30mm	-	SANDSTONE	Medium grey	Very fine to fine	N	Moderate calcareous cement, trace to common white argillaceous to silty matrix, rare carbonaceous fragments, rare feldspars, rare mica flakes, tight to very tight visual porosity.
17	3482.6m	45mm	-	SILTSTONE	Medium to medium dark grey	-	N	Argillaceous, none calcareous, trace carbonaceous specks, hard.
18	3481.0m	10mm	-	SANDSTONE	Light olive grey to light grey	Very fine to fine	N	Weak to moderate calcareous cement, trace to common white argillaceous to silty matrix, rare carbonaceous fragments, rare feldspars, rare mica flakes, tight visual porosity. (Core recovered broken, 30mm of filter cake)
19	3476.5m	NONE	-	-	-	-	-	-
20	3471.0m	5mm	-	SANDSTONE	Light olive grey to light grey	Very fine to fine	N	Weak to moderate calcareous cement, trace to common white argillaceous to silty matrix, thin Coal lamination, rare feldspars, rare mica flakes, tight visual porosity. (Core recovered shattered)
21	3464.0m	35mm	-	SANDSTONE	Medium light grey	Very fine to fine	N	Weak to moderate calcareous cement, trace to common white argillaceous to silty matrix, thin Coal lamination, rare feldspars, rare mica flakes, tight visual porosity. (Core recovered broken)
22	3454.5m	NONE						
23	3452.5m	NONE						
24	3446.0m	NONE						
25	3443.0m	NONE						

COMMENTS: Depths of cores are inferred post logging. Due to missing marker disks, there is some uncertainity regarding sample depths.
Photos of undisturbed cores are presented overleaf.

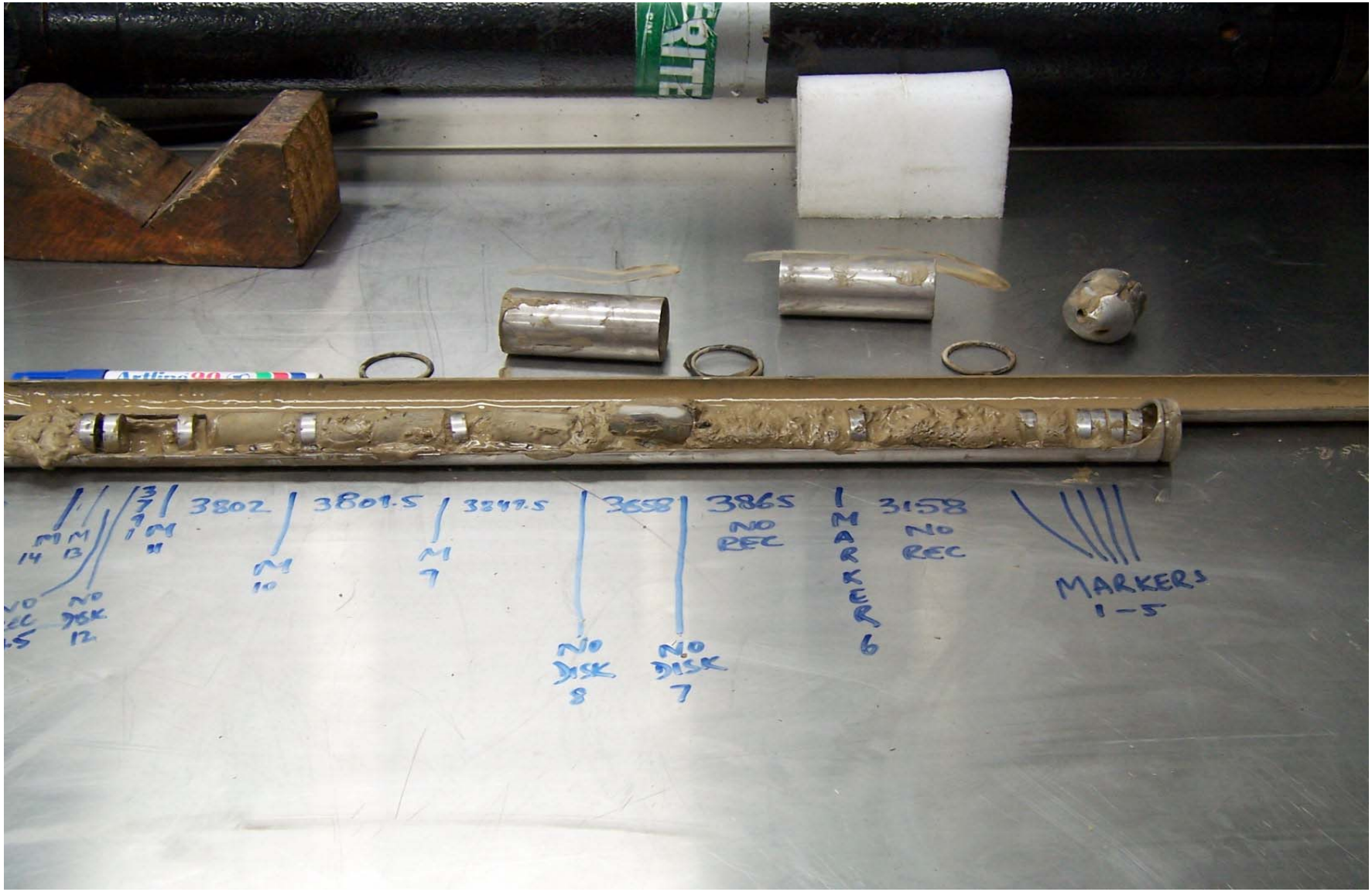
M 14
M 13
NO DISK 12
M 11
3802
M 10
3801.5
3847.5
M 7
3858
NO DISK 8
NO DISK 7
3865
NO REC
MARKER 6
3158
NO REC
MARKERS 1-5


3482.6
3526.5
3535
3620
3695.5
3700
3802
NO DISK 24
NO DISK 23
M 22
M 21
M 20
M
M
M 14
M 13
M 11
NO DISK
NO REC 3749.5
NO DISK 12

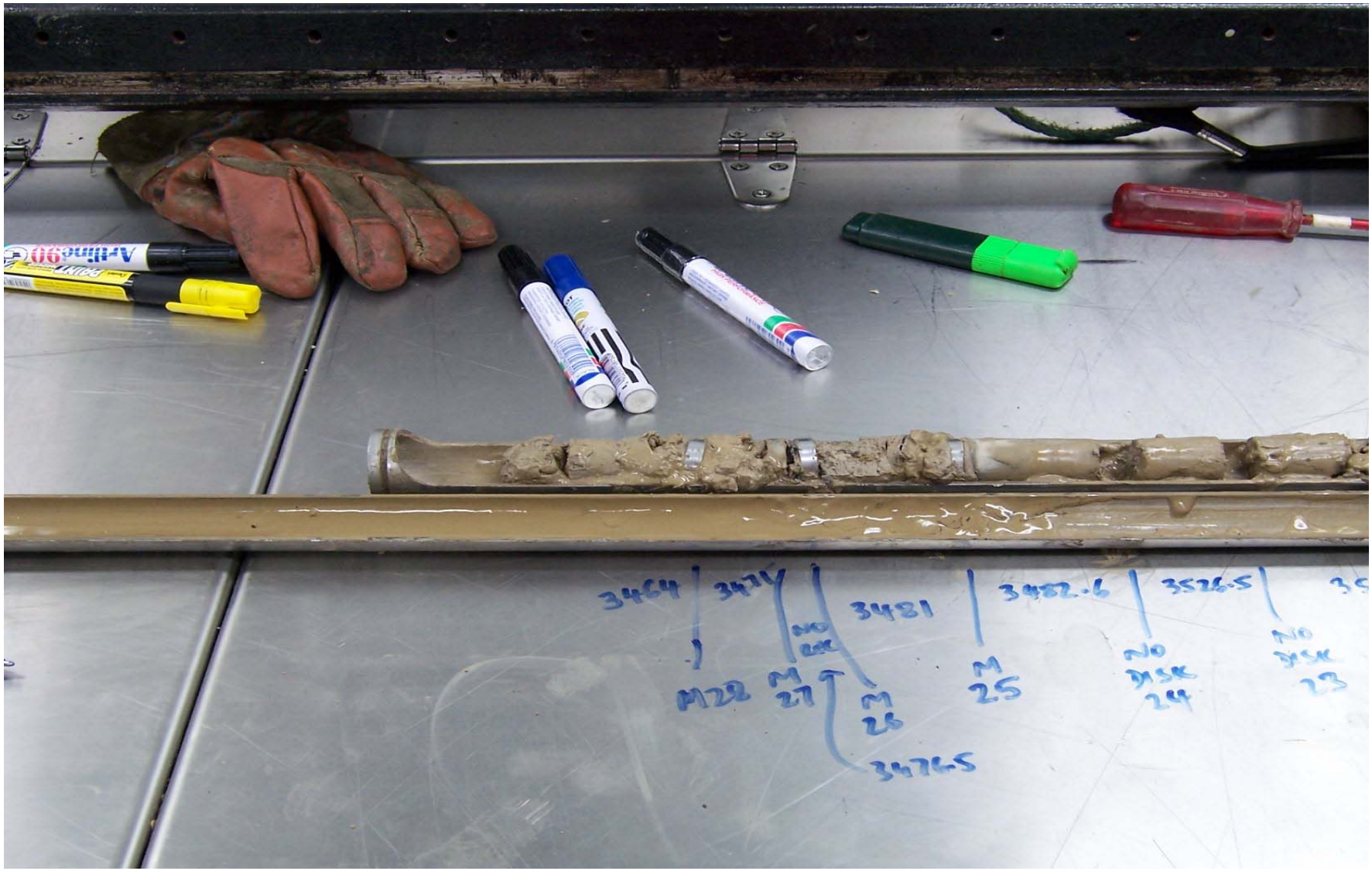
3464
3474
3481
3482.6
3526.5
NO DISK
M 27
M 26
3476.5
M 25
NO DISK 24
NO DISK 23

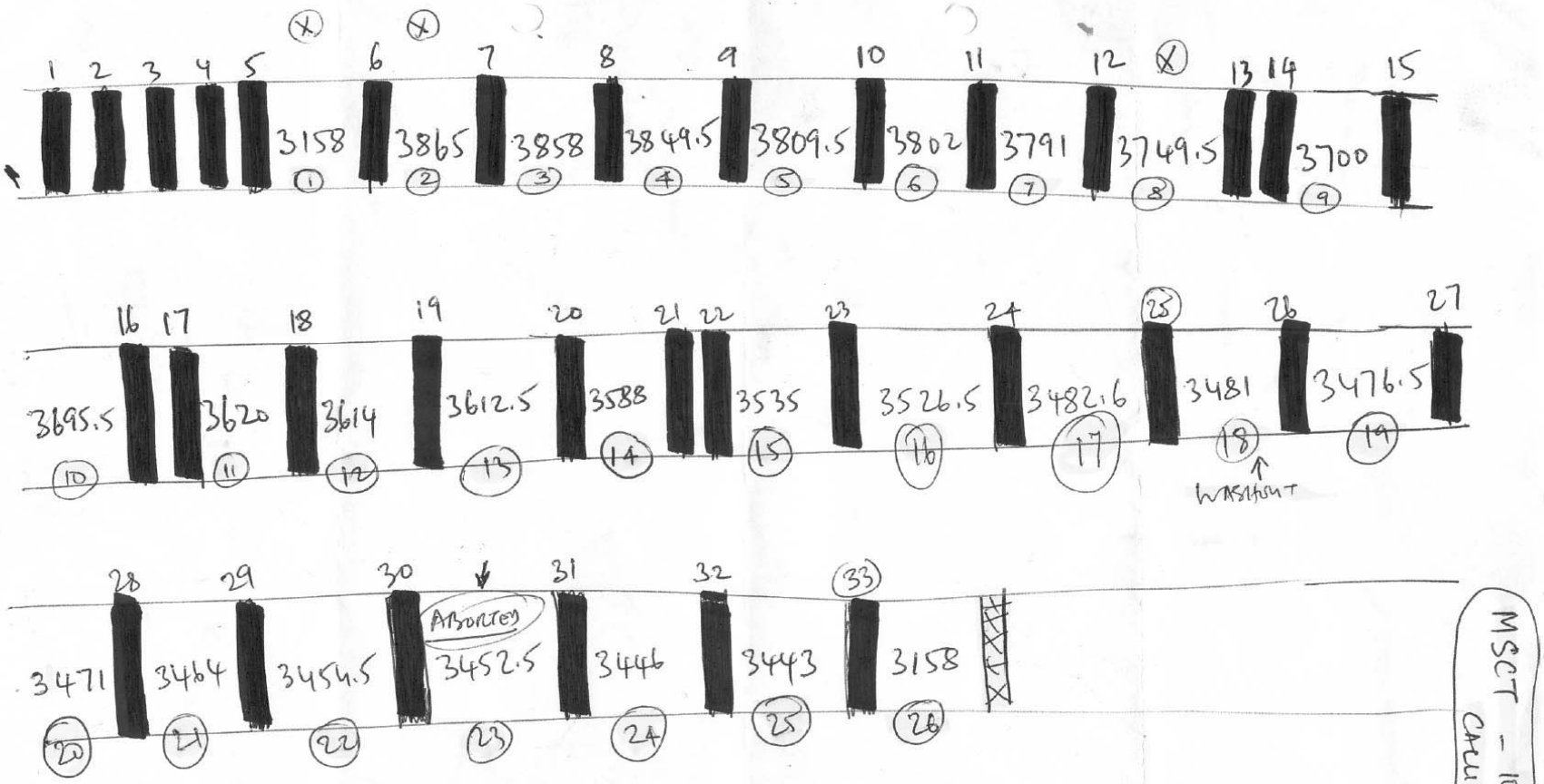
1 2 3 4 5 6 7 8 9 10 11 12 13 14 15
3158 3865 3858 3849.5 3809.5 3802 3791 3749.5 3700
1 2 3 4 5 6 7 8 9
16 17 18 19 20 21 22 23 24 25 26 27
3695.5 3620 3614 3612.5 3588 3535 3526.5 3482.6 3481 3476.5
10 11 12 13 14 15 16 17 18 19
WASHOUT
28 29 30 31 32 33
3471 3464 3454.5 3452.5 3446 3443 3158
ABORTED
20 21 22 23 24 25 26
MSCT - 10/11/04
CALLISTER-1

SECTION 2.3: ROUTINE CORE ANALYSIS

CORE LABORATORIES
AUSTRALIA PTY LTD

447-449 Belmont Ave, Kewdale, Perth WA 6105
Tel : (61 8) 9353 3944 Fax : (61 8) 9353 1369
Email : corelab.australia@corelab.com

Routine Core Analysis
Well Callister #1

Prepared for
Santos Ltd.

February 2005

File: PRP-04101

Rock Properties
Core Laboratories
Perth
Australia

CORE LABORATORIES
AUSTRALIA PTY LTD

8 February 2005

Santos Ltd.
Santos House, Level 29
91 King William St.
Adelaide, SA 5000

Attention : Mr. Andy Pietsch

Subject : Routine Core Analysis
Well : Callister #1
File : PRP-04101

Dear Andy,

Presented herein is the final report of a routine core analysis study conducted on selected rotary sidewall cores from the above well that arrived at our laboratory on the 8th December 2004

We appreciate the opportunity to present this service to Santos Ltd. Please contact us should you require any further information or assistance.

Yours sincerely,
Core Laboratories Australia Pty Ltd

James Brown
Senior Core Analyst

ABN. 67 065 540 838
P.O Box 785 Cloverdale, WA 6105 Australia Tel : (61-8) 9353 3944 Fax : (61-8) 9353 1369
Email : corelab.australia@corelab.com

TABLE OF CONTENTS

INTRODUCTION

Eleven rotary sidewall cores from the well Callister #1 arrived at our laboratory on the 8th December 2004.

Services performed and presented in the report include:

- Permeability, porosity (at ambient conditions)

LABORATORY PROCEDURES

Initial Inventory:

After the arrival of the sidewall cores on the 8th December 2004, the sample numbers and depths were recorded on an in-house inventory.

Sample Preparation:

The samples were inspected (samples 10 and 12 were not suitable for analysis), then trimmed and cleaned with warm methanol to remove any residual salts. After cleaning, the samples were dried in a convection oven, and then cooled to room temperature in a desiccator prior to analysis.

Grain Volume:

The weight, diameter and length of all suitable samples were measured before they were processed through the Ultrapore™ porosimeter to determine grain volume. As a standard quality control measure, a calibration check plug was run after the samples.

Permeability and Porosity:

Permeability measurements were made at a confining stress of 400psig. Bulk volume was determined by mercury displacement. Porosity was calculated using grain volume and bulk volume as follows:

$\phi = (Vb-Vg)/ Vb$

Where : ϕ = Porosity, fraction
Vb = Bulk volume, cm^3
Vg = Grain volume, cm^3

Core plug permeability was determined using the steady-state permeameter. Each sample was loaded individually into a Hassler holder, with the circumference sealed at the required confining stress to prevent gas bypassing. Dry air was injected through the samples at a constant pressure. The pressure differential across the length of each sample was measured, and the flow rate of the air was determined. The steady-state permeability-to-air data were calculated using Darcy's law as follows:

$$K_a = \frac{2\mu_a q_a L P_{atm}}{A(P_1 + P_2)(P_1 - P_2)}$$

Where: K_a = Permeability to air, darcies
μ_a = Gas viscosity at the mean pressure and temperature of the sample, cp
q_a = Gas volumetric flowrate at atmospheric pressure and temperature, cm^3/sec
L = Sample length, cm
A = Sample cross-sectional area, cm^2
P_{atm} = Atmospheric pressure, atm
P_1 = Upstream pressure, atm
P_2 = Downstream pressure, atm

POROSITY and PERMEABILITY
(Ambient)

SAMPLE NUMBER	SAMPLE DEPTH (m)	AMBIENT CONDITIONS PERMEABILITY Kinf (md)	AMBIENT CONDITIONS PERMEABILITY Kair (md)	AMBIENT CONDITIONS POROSITY (%)	COMMENTS
21	3464.0		0.794	17.2	
16	3526.5		0.130	14.1	
15	3535.0		-	14.8	Fractured
12	3614.0		-	-	Not suitable
11	3620.0		0.073	8.4	
10	3695.5		-	-	Not suitable
9	3700.0		-	14.6	Fractured
6	3802.0		0.167	15.5	
5	3809.5		2.66	16.6	
4	3849.5		0.237	14.0	
3	3858.0		-	6.7	Fractured

SECTION 2.4: CATALOGUE OF WELLSITE SAMPLES

SHIPPING MANIFEST

WELL: **CALLISTER-1**

Includes:
1) **Washed and Dried samples from 790 – 3914m**
2) **Geochemical samples 790 – 3914m**
3) **Samplex Trays from 790 – 3914m**

Date: **09 December 2004**
From: **BHI Unit 431**
Location: **Jack Bates**

GEOLOGICAL SAMPLES

Total Number of Boxes/Packages: 36

For shipment to:

Santos Ltd
c/- Santos Core Library
Ascot Transport
30 Francis Street
Port Adelaide SA 5015

Attn: Santos Core Librarian

Samples shipped from Transocean Jack Bates in container # 41329

SAMPLES FOR CALLISTER-1

SAMPLE TYPE	No. of Sets	Sample Box No	Depths (m) From	Depths (m) To	Packing Details and notes
Washed and dried	6	1	787	885	**each set pack in 1 box Box-1**
		2	885	970	
		3	970	1060	
		4	1060	1115	
		5	1115	1200	
		6	1200	1290	
		7	1290	1380	
		8	1380	1485	
		9	1485	1605	**each set pack in 1 box Box-2**
		10	1605	1720	
		11	1720	1820	
		12	1820	1905	
		13	1905	1990	
		14	1990	2090	
		15	2090	2180	
		16	2180	2265	
		17	2265	2355	**each set pack in 1 box Box-3**
		18	2355	2450	
		19	2450	2540	
		20	2540	2640	
		21	2640	2740	
		22	2740	2840	
		23	2840	2935	
		24	2935	3055	
		25	3055	3156	**each set pack in 1 box Box-4**
		26	3156	3219	
		27	3219	3285	
		28	3285	3354	
		29	3354	3432	
		30	3432	3486	
		31	3486	3546	
		32	3546	3597	
		33	3597	3660	**each set pack in 1 box Box-5**
		34	3660	3720	
		35	3720	3777	
		36	3777	3840	
		37	3840	3879	
		38	3879	3914	
Samplex Tray	3	1	787	3339	**each set pack in 1 box**
		2	3339	3914	
Geochemistry Samples	1	1	2050	2500	**Consisted of 3 boxes**
		2	2500	2950	
		3	2950	3300	

SECTION 2.5: PRELIMINARY PALYNOLOGY REPORT

Santos

INTERIM PALYNOLOGY REPORT - COMPOSITE

Study: **Callister No. 1**

Author: R. Helby

SAMPLE	DEPTH (metres)	REMARKS
CUTT	1460	Restricted palynomorph assemblage lacking both dinocyst and spore-pollen marker taxa. Tentatively assigned to *I. pellucidum* Zone on basis of apparent absence of *X. australis* and *T. lilliei*. Shallow marine.
CUTT	1505	Very restricted dinocyst assemblage with rare *X. australis* and *Areosphaeridium suggestium*. Near shore marine.
CUTT	1535	Fairly restricted dinocyst assemblage with frequent *X. australis* (3%). Near shore marine.
CUTT	1580	Restricted palynomorph assemblage with prominent (5/21) *Xenikoon australis* and single specimen of *Nelsoniella aceras* (not seen in other samples). Spore-pollen limited, not diagnostic. Near shore marine.
CUTT	1630	Moderate palynomorph assemblage with frequent (7/83) *Xenikoon australis*. Spore-pollen suite includes *Nothofagidites* spp. Near shore marine.
CUTT	1655	Moderate palynomorph assemblage with common (5/43) *Xenikoon australis*. Spore-pollen suite restricted – not diagnostic. Near shore marine.
CUTT	1715	Very restricted palynomorph assemblage with *Areosphaeridium suggestium* and tentative identification of *Xenikoon australis*. Spore-pollen suite restricted – not diagnostic. Near shore marine.
CUTT	1800	Very restricted palynomorph assemblage with a single specimen of *Heterosphaeridium.* Spore-pollen suite restricted – not diagnostic. Near shore marine.
CUTT	1850	Restricted dinocyst assemblage with prominent *Heterosphaeridium* spp. and tentatively identified specimen of *Xenikoon australis.* Spore-pollen suite restricted – not diagnostic. Near shore marine.
CUTT	1885	Restricted dinocyst assemblage with rare *Xenikoon australis* and prominent *Heterosphaeridium* spp. *Nelsoniella* and older taxa not observed. Near shore marine.
CUTT	1900	Almost barren
CUTT	1910	Very restricted palynomorph assemblage with a single specimen of *Heterosphaeridium.* Spore-pollen suite very restricted – not diagnostic. Near shore marine.

INTERIM PALYNOLOGY REPORT - COMPOSITE

SAMPLE	DEPTH (metres)	REMARKS
CUTT	1985	Restricted dinocyst assemblage with prominent *Heterosphaeridium* spp. (22%), rare *Xenikoon australis* (2 specimens) and a questionable specimen of *Nelsoniella aceras.* Spore-pollen suite not diagnostic. Near shore marine.
CUTT	2100	Restricted dinocyst assemblage with rare *Nelsoniella aceras, Heterosphaeridium* spp. and frequent *Odontochitina porifera*. Spore-pollen suite possibly no older than *T. apoxyexinus* Zone on the basis of occurrence of *Latrobosporites amplus*. Near-shore marine.
CUTT	2165	Fairly rich, moderately diversity dinocyst suite with common *Nelsoniella aceras,* common *Heterosphaeridium* spp. and common *Odontochitina* spp. Spore-pollen suite possibly no older than *T. apoxyexinus* Zone on the basis of occurrence of *Latrobosporites amplus*. Shelfal marine.
CUTT	2255	Moderate diversity dinocyst suite with common *Isabelidinium rotundatum,* frequent *Trithyrodinium vermiculatum* and *Amphidiadema denticulata*. Spore-pollen suite possibly no older than *T. apoxyexinus* Zone. Shelfal marine.
CUTT	2270	Restricted dinocyst assemblage with rare *Isabelidinium rotundatum* and frequent *Heterosphaeridium* spp. Spore-pollen suite restricted – not diagnostic. Near shore marine.
CUTT	2270	Rich, moderately diverse dinocyst suite with frequent *Isabelidinium rotundatum, frequent Trithyrodinium vermiculatum* and abundant *Heterosphaeridium* spp. Spore-pollen suite possibly no older than *T. apoxyexinus* Zone. Near-shore marine.
CUTT	2270	Low diversity dinocyst suite with frequent *Isabelidinium rotundatum, Amphidiadema denticulata with abundant Heterosphaeridium* spp. and *frequent Trithyrodinium vermiculatum.* Shelfal marine.
CUTT	2310	Low diversity dinocyst suite with frequent *Isabelidinium rotundatum, Amphidiadema denticulata with common Heterosphaeridium* spp. and *frequent Trithyrodinium vermiculatum.* Shelfal marine.
CUTT	2320	Low diversity dinocyst suite with frequent *Isabelidinium rotundatum, Amphidiadema denticulata with common Heterosphaeridium* spp. and *frequent Trithyrodinium vermiculatum.* Shelfal marine.

INTERIM PALYNOLOGY REPORT - COMPOSITE

SAMPLE	DEPTH (metres)	REMARKS
CUTT	2350	Low diversity dinocyst suite with frequent *Isabelidinium rotundatum, I. cretaceum and a number of specimens transitional to I. cretaceum elongatum* (variety lacking apical horn). Accessory taxa include *Amphidiadema denticulata with common Heterosphaeridium* spp. and *frequent Trithyrodinium vermiculatum.* Shelfal marine.
CUTT	2400	Rich dinocyst assemblage, dominated by *Heterosphaeridium* spp. (50%+), with *Amphidiadema denticulata*, frequent *Odontochitina wannabe* and frequent *Trithyrodinium vermiculatum.* The *Isabelidinium* suite includes *I cretaceum*, *I. cretaceum elongatum* (Marshall) and *I. belfastense rotundatum* (sensu Marshall). Shelfal marine.
CUTT	2450	Moderately diverse dinocyst assemblage with common *Heterosphaeridium* spp. (15%+), *Amphidiadema denticulata*, *Isabelidinium cretaceum elongatum*, rare *Odontochitina wannabe* and frequent *Trithyrodinium vermiculatum.* Shelfal marine.
CUTT	2500	Low diversity microplankton suite, dominated by *Heterosphaeridium* spp. (25%%+) with frequent *Isabelidinium cretaceum* and *I. cretaceum elongatum. Odontochitina triangularis* and *Trithyrodinium vermiculatum* recorded. Shelfal marine.
CUTT	2550	Moderately diverse dinocyst assemblage with common *Heterosphaeridium* spp. (25%), *Amphidiadema denticulata*, *Isabelidinium cretaceum I. cretaceum elongatum* and rare *Odontochitina magna.* Shelfal marine.
CUTT	3060	Relatively rich, moderately diverse, microplankton suite with prominent *Heterosphaeridium* spp. (12%) and *Amosopollis cruciformis* (8%). *C. striatoconum* Zone pick based, tentatively, on questionable specimen of *C. striatoconum. K. polypes* Zone pick based on occurrence of the eponymous species with frequent *Apteodinium* sp. (3%). Near shore marine.
CUTT	3159	Lean, moderate diversity, dinocyst suite with *Kiokansium polypes,* frequent *Heterosphaeridium* spp. (7%) and rare *Amosopollis cruciformis.* Spore-pollen suite not diagnostic. Near shore marine.
CUTT	3225	Rich, moderately diversity, dinocyst suite with frequent *Kiokansium polypes* (4%), common *Heterosphaeridium* spp. (21%), *Apteodinium* sp. and *Palaeoperidinium cretaceum.* Spore-pollen suite not diagnostic. Near shore marine.
CUTT	3243	Rich, low diversity, dinocyst suite with frequent *Kiokansium polypes* (3%), common *Heterosphaeridium* spp. (15%) and frequent *Apteodinium* sp. (3%). Spore-pollen suite not diagnostic. Near shore marine.
CUTT	3264	Lean, low diversity, dinocyst suite with frequent *Heterosphaeridium* spp. (6%), *Apteodinium* sp. and *Kiokansium polypes.* Spore-pollen suite not diagnostic. Near shore marine.
CUTT	3309	Lean, low diversity, dinocyst suite with frequent *Heterosphaeridium* spp. (3%), *Apteodinium* sp., *Circulodinium deflandrei* (?), *Cyclonephelium compactum* and *Isabelidinium* spp. Spore-pollen suite not diagnostic. Near shore marine.
CUTT	3348	Very rich, moderately diverse, dinocyst suite with a major *Heterosphaeridium* spp. acme (75%), *Apteodinium* sp., *Cyclonephelium compactum* and *Palaeoperidinium cretaceum.* Spore-pollen suite not diagnostic. Near shore marine.

INTERIM PALYNOLOGY REPORT - COMPOSITE

SAMPLE	DEPTH (metres)	REMARKS
CUTT	3399	Rich (40% total palynomorphs), moderate diversity, dinocyst suite with common *Cribroperidinium edwardsii* (12%), common *Heterosphaeridium* spp. (16%), *Apteodinium* sp., *Cyclonephelium compactum, Isabelidinium* cf. *evexus* and *Kiokansium polypes.* Spore-pollen suite not diagnostic. Near shore marine.
CUTT	3432	Rich (48% total palynomorphs), moderately diverse, dinocyst suite with common *Cribroperidinium edwardsii* (11%), common *Heterosphaeridium* spp. (21%), *Kiokansium polypes, Palaeoperidinium cretaceum* and *Spinidinium* sp. Spore-pollen suite not diagnostic. Near shore marine.
CUTT	3459	Rich (37% total palynomorphs), low diversity, dinocyst suite dominated by *Heterosphaeridium* spp. (27%), with frequent *Cribroperidinium edwardsii* (5%), *Cyclonephelium compactum* and *Chlamydophorella nyei* (2%). Spore-pollen suite not diagnostic. Near shore marine.
CUTT	3462	Relatively lean (13% total palynomorphs), low diversity, dinocyst suite with *Cyclonephelium compactum* (5%), *Heterosphaeridium* spp. (7%), *Chlamydophorella nyei* and *Circulodinium deflandrei* (?). Spore-pollen suite not diagnostic. Near shore marine.
CUTT	3486	Relatively lean (11% total palynomorphs), low diversity, dinocyst suite with *Cyclonephelium compactum* (4%), *Heterosphaeridium* spp. (5%), *Circulodinium deflandrei* (?) and fragments of *Cribroperidinium edwardsii* (possibly equivalent to 1-2%). Spore-pollen suite not diagnostic. Near shore marine.
CUTT	3507	Relatively lean (10% total palynomorphs), low diversity, dinocyst suite with *Cyclonephelium compactum* (5%), *Heterosphaeridium* spp. (4%), *Kiokansium polypes* and *Oligosphaeridium pulcherrimum*. Spore-pollen suite not diagnostic. Near shore marine.
CUTT	3570	Spore-pollen suite (98% of total palynomorphs) includes frequent *Appendicisporites distocarinatus* (4%) and probable *Phyllocladidites mawsonii. Hoegisporis trinalis* and *Laevigatosporites musa* were not recorded. 2 specimens of *Heterosphaeridium* spp. were recorded during the count – other dinocysts were not observed. Fluvial to fringing marine.
CUTT	3593	Spore-pollen suite (99% of total palynomorphs) includes *Appendicisporites distocarinatus, Hoegisporis trinalis, Phyllocladidites eunuchus* and *P. mawsonii.* A single specimen of *Heterosphaeridium* was recorded. Fluvial to fringing marine.
CUTT	3593	Spore-pollen suite (98% of total palynomorphs) includes *Appendicisporites distocarinatus* (4%), common *Cicatricosisporites* spp. (ca 17%) and *Hoegisporis trinalis.* A lean dinocyst component includes *Cribroperidinium edwardsii, Heterosphaeridium* spp., *Kiokansium polypes* and *Odontochitina* sp. Near shore marine.
CUTT	3723	Spore-pollen suite (99% of total palynomorphs) includes *Appendicisporites distocarinatus* (3%), common *Cicatricosisporites* spp. (10%) and *Phyllocladidites mawsonii.* A single specimen of *Heterosphaeridium* spp. was recorded. Near shore marine.
CUTT	3822	Spore-pollen constitute 99% of total palynomorphs and are poorly preserved. Zone pick tentatively supported by questionable occurrence of *Appendicisporites distocarinatus* and *Phyllocladidites mawsonii.* Rare *Heterosphaeridium* specimens considered caved (much lighter). Non-marine (?).

SAMPLE	DEPTH (metres)	REMARKS
CUTT	3870	Zone pick supported by unequivocal *Appendicisporites distocarinatus* and probable *Phyllocladidites eunuchus. Hoegisporis trinalis* recorded, but possibly caved. *Kiokansium polypes* and several specimens of *Heterosphaeridium* spp. recorded (some or all of the latter may be caved – lighter colour). Near shore marine (?).
CUTT	3870	Very lean assemblage, poorly preserved, with "frequent" *Cicatricosisporites* spp., rare *Dilwynites granulatus* and *Triporoletes* spp. None of the diagnostic elements of the *H. trinalis* Zone were observed. A single specimen of *Heterosphaeridium* recorded – considered to be caved. Non-marine (?).
CUTT	3914	Extremely lean assemblage, poorly preserved, with *Appendicisporites distocarinatus* (possibly caved), common *Cicatricosisporites* spp. and *Triporoletes* sp. No other of the diagnostic elements of the *H. trinalis* Zone were observed. No dinocysts observed. Non-marine.

SECTION 3: WIRELINE LOGGING REPORTS

SECTION 3.1: SUITE 1 – INTERMEDIATE LOGGING

SECTION 3.1.1: SUITE 1 - LOGGING ORDER FORM

Santos
A.B.N. 80 007 550 923

LOGGING ORDER

COMPANY: SANTOS – INPEX - MITTWELL

WELL: CALLISTER-1 **FIELD:** EXPLORATION

RIG: JACK BATES **STATE:** VICTORIA

LOCATION: OTWAY BASIN **BLOCK:** VIC / P51

LATITUDE: 38° 31' 59.690" South **LONGITUDE:** 141° 28' 23.462" East

NORTHING: 5734911.3m **EASTING:** 541241.7m

ELEVATIONS: **Water Depth:** 129.4m **RT:** 25.0m LAT **DF**: 29.0m
RT-Seabed : 158.4m

914mm HOLE: 192m **762mm CSG:** 192m 310 ppf X-52

445mm HOLE: 787.5m **340mm CSG:** 778m 68 ppf L-80 TER

311mm HOLE: 2550m **244mm CSG:**

MUD SYSTEM: KCl / PHPA **CIRCULATION STOPPED: 04:30 hrs on 26/10/04**

WT: **VISC:** **PV/YP:** **PH**: **FLUID LOSS:** **CHL**:
** See attached Mud report for mud properties

GEOLOGIST: R. Subramanian

INFORMATION GIVEN ABOVE IS TO BE USED ON LOG HEADING SHEETS.

HOLE CONDITIONS: (TIGHT SPOTS, DEVIATION, COALS, BARITE IN MUD, ETC)
Good hole conditions expected. Minor tight spots on trip out @ 2104m, 2054m, 2025m, 1990m, 1923m, 1866m.
Barite in mud = Nil

DRILL STEM TESTS/CORED INTERVALS:
No DSTs were conducted. No open hole cores were cut.

COMMENTS: (TO BE INCLUDED IN REMARKS SECTION ON HEADER SHEET)

LOGS:

PROGRAM CONFIRMED WITH OPERATIONS GEOLOGIST AT 13:00 hrs ON 26-10-04

PROGRAM VARIES FROM PRE-SPUD NOTES: **YES**: [ ] **NO:** [X]

LOG	INTERVAL	REPEAT SECTION / Comments
RUN 1: PEX-HALS		
Resistivity-Caliper-SP	TD to Casing Shoe	No repeat section required, check repeatability with down log.
Sonic (P&S WFT)	TD to Casing Shoe	
Neutron Density	TD to Casing Shoe	
GR	TD to Surface	

REMARKS: (ALL OPERATIONS AS PER CURRENT SANTOS OPERATING PROCEDURES)

1. TENSION CURVE - TO BE DISPLAYED ON LOG FROM T.D. TO CASING SHOE.
2. ALL CALIBRATIONS IN CASING MUST BE VERSUS DEPTH.
3. ALL THERMOMETER READINGS TO BE RECORDED ON LOG
4. ALL SCALES AND PRESENTATIONS TO CONFIRM TO STANDARDS UNLESS OTHERWISE ADVISED.
5. THE FIELD/EDIT TAPE MUST BE A MERGED COPY OF ALL LOGS RUN. SEPARATE TAPES ARE ONLY ACCEPTABLE AS AN INTERIM MEASURE.
6. ANY CHANGE FROM STANDARD PROCEDURES/SCALES TO BE NOTED IN REMARKS SECTION.
7. RM, RMF, RMC AND BHT MUST BE ANNOTATED ON FAXED LOGS. FAXED LOGS SHOULD ALSO INDICATE IF ON DEPTH OR NOT.
8. LOG DATA IS TO BE TRANSMITTED AS SOON AS POSSIBLE AFTER ACQUISITION. IF ANY DELAYS ARE LIKELY OR IF DATA TRANSMISSION WILL ADVERSELY EFFECT THE OPERATION THEN THE WELLSITE GEOLOGIST MUST BE IMMEDIATELY INFORMED.
9. THE WELLSITE GEOLOGIST MUST BE INFORMED IMMEDIATELY OF ANY TOOL OR HOLE PROBLEMS, LOST TIME OR ANY OTHER EVENT WHICH MAY AFFECT THE LOGGING OPERATIONS.

SECTION 3.1.2: SUITE 1 - ELECTRIC LOGGING TIME SUMMARY

Geology Operations

Santos

ELECTRIC LOGGING TIME SUMMARY

LOGGING UNIT:	1801
START DATE:	26/10/04
END DATE:	27/10/04
DEPTH DRILLER:	2550m
DEPTH LOGGER:	2512m Hung up

LEFT BASE:	19/10/04
ARRIVED @ WELLSITE:	19/10/04
INITIAL RIG UP:	26/10/04
FINAL RIG DOWN:	27/10/04
RETURN TO BASE:	

WELL NAME:	CALLISTER-1
TRIP NUMBER:	SUITE 1
WELLSITE GEOLOGIST:	R Subramanian
LOGGING ENGINEER:	Dimitri / Justin
PAGE / DATE:	1 (26/10/04)

DATE / TIME	RIG UP / DOWN	TOOL CHECK	RIH / POOH	LOGGING	DATA TX	LOST TIME SLB	I. O.	WIPER TRIP	LOST TIME OTHERS	OTHERS	COMMENTS / REMARKS
00:00											
:30											
01:00											
:30											
02:00											
:30											
03:00											
:30											
04:00											
:30											
05:00											
:30											
06:00											
:30											
07:00											
:30											
08:00											
:30											
09:00											
:30											
10:00											
:30											
11:00											
:30											

WSG (SIGN)	ENGINEER(SIGN)

TOTALS

TOOLS RUN:

TOOLS RUN:

TOOLS RUN:

LOGGING UNIT:	1801	WELL NAME	CALLISTER-1	PAGE	1A

DATE / TIME	RIG UP / DOWN	TOOL CHECK	RIH / POOH	LOGGING	DATA TX	LOST TIME SLB	I. O.	WIPER TRIP	LOST TIME OTHERS	OTHERS	COMMENTS / REMARKS
12:00											
:30											
13:00											
:30											
14:00											
:30											
15:00											
:30											**RUN 1: SUPER COMBO**
16:00										X	16:05 Safety meeting
										X	16:10 Rig up compensating system
:30										X	
	X										16:45 Rig up sheaves
17:00	X										
	X										
:30	X										17:30 Makeup Toolstring
	X										
18:00	X										18:10 Finish making toolstring
	X										18:25 Before cals
:30	X										
	X										18:55 Load sources
19:00			X								19:00 RIH
			X								
:30			X								
			X								
20:00						X				O	20:00 Stop at 750m. No return current.
						X				O	Re-position fish. No go.
:30						X				O	Troubleshoot
			O			X					20:55 POOH to 550m
21:00			O			X					21:10 RIH to check in Open hole. No go.POOH
			O			X					
:30			O			X					
			O			X					
22:00			O			X					
						X				O	22:20 Tool @ surface. Remove sources
:30						X				O	Swap to back up laterolog tools
						X				O	
23:00						X				O	
		O				X					23:20 Power up tools
:30	O					X					23:40 Load sources.
			O			X					23:45 RIH
											WSG (SIGN) / **ENGINEER(SIGN)**
						TOTALS					
	2.25		1.0			4.0				0.75	**TOOLS RUN** Grandslam
											TOOLS RUN:
											TOOLS RUN:

SERVICE QUALITY SUMMARY										
CLIENT WSG					**ENGINEER**					
1	2	3	4	5	1	2	3	4	5	
										SAFETY
										PROMPTNESS
										TOOL & SURFACE SYSTEM PERFORMANCE
										ATTITUDE & CO-OPERATION
										WELLSITE PRODUCTS / LOG QUALITY
										COMMUNICATIONS / TX PERFORMANCE
										OTHER (PLEASE SPECIFY)
1: Excellent - 2 - 3: Normal - 4 - 5: Very Poor										

Geology Operations

Santos

ELECTRIC LOGGING TIME SUMMARY

LOGGING UNIT:	1801	**LEFT BASE:**	19/10/04	**WELL NAME:**	CALLISTER-1
START DATE:	26/10/04	**ARRIVED @ WELLSITE:**	19/10/04	**TRIP NUMBER:**	SUITE 1
END DATE:	27/10/04	**INITIAL RIG UP:**	26/10/04	**WELLSITE GEOLOGIST:**	R Subramanian
DEPTH DRILLER:	2550m	**FINAL RIG DOWN:**	13/02/04	**LOGGING ENGINEER:**	Dimitri / Justin
DEPTH LOGGER:	2512m Hung up	**RETURN TO BASE:**		**PAGE / DATE:**	1 (27/10/04)

DATE / TIME	RIG UP / DOWN	TOOL CHECK	RIH / POOH	LOGGING	DATA TX	LOST TIME SLB	I. O.	WIPER TRIP	LOST TIME OTHERS	OTHERS	COMMENTS / REMARKS
00:00			O			X					00:15 At Casing shoe.
				X							Record downlog
:30				X							
				X							
01:00				X							
				X							
:30				X							
				X							Hung up at 2503m. Pickup & RIH T=84.3degC
02:00				X							02:00 Hung up at 2508m. Record Main Pass
				X							
:30				X							
				X							
03:00				X							
				X							
:30				X							
				X							
04:00				X							Deep Resistivity – lost 1665-1325m. Regained.
				X							Now cannot close calliper. Stopped log @ 1260m
:30				X							Resistivity failed.
				X							Log up from 1260m with remaining curves.
05:00				X							Unable to re-log due to Open calliper.
						X					05:10 Inside casing. Powerdown to see if calliper
:30				X							Closes. 05:35 OK but town cancels re-log.
				X							Record GR to surface. No data 1260-1180m
06:00				X							06:15 100m. Stop GR log.
			X								
:30			X								
	X										06:45 Commence rig down
07:00	X										
	X										
:30	X										
	X										08:00 Finish Rig down
08:00											
:30											
09:00											
:30											
10:00											
:30											
11:00											
:30											
TOTALS	1.25		0.50	5.75		0.50					

WSG (SIGN)	**ENGINEER(SIGN)**

TOOLS RUN:	
TOOLS RUN:	
TOOLS RUN:	

SECTION 3.1.3: SUITE 1 – FIELD ELECTRIC LOGGING REPORT

SANTOS LIMITED

FIELD ELECTRIC LOG REPORT

WELL:	Callister-1	**GEOLOGIST:**	R. Subramanian
LOGGING Engr:	Dimitri / Justin		
RUN NO:	Suite 1 / Run 1	**DATE LOGGED:**	26-10-04 to 27-10-04
DRILLERS DEPTH:	2550m	**LOGGERS DEPTH:**	2512 (Hung up)
ARRIVED ON SITE:	19-10-04		
ACTUAL LOG TIME:	5 hrs 45 mins	**LOST TIME LOGGER:**	4 hrs 30 mins
TOTAL TIME:	16 hrs 00 mins	**LOST TIME OTHER:**	-

TYPE OF LOG	PEX-HALS (1st attempt failed)	PEX-DLT (2nd attempt)		
TIME CIRC. STOPPED	04:30 26/10/04	04:30 26/10/04		
TIME TOOL RIG UP	16:45 26/10/04	22:30 26/10/04		
TIME TOOL RIH	19:00 26/10/04	23:45 26/10/04		
TIME TOOL RIG DOWN	22:30 26/10/04	08:00 27/10/04		
TOTAL TIME	5 hrs 45 mins	9 hrs 30 mins		

TYPE OF LOG	FROM (m)	TO (m)	REPEAT SECTION	TIME SINCE LAST CIRC	BHT
PEX-DLT-DSI					
GR	2550	100	Down log	21.30 hrs	87°C
Resistivity	2550	778			
SP	2550	778			
Caliper	2550	778			
Dt (Full waveforms)	2550	778			
Neutron-Density	2550	778			

MUD SYSTEM: KCl – PHPA	WEIGHT: 1.10 SG
HOLE CONDITIONS: Good	

WELLSITE LOG QUALITY CONTROL CHECKS

LOG ORDER FORM	OK	MUD SAMPLE RESISTIVITY	OK	TOOL NO. / CODE CHECK	OK
OFFSET WELL DATA	OK	CABLE DATA CARD	OK	LOG SEQUENCE CONFIRM.	OK

LOG TYPE	Run 1 PEX-DLT	REMARKS
CASING CHECK	Y	
SCALE CHECK	Y	
DEPTH Casing	Y	L=778m D=778'
CALIBRATIONS OK	Y	
REPEATABILITY	Y	Downlog
LOGGING SPEED	3600 ft/hr	
OFFSET WELL REPEATABILITY	Y	Compares with MWD/LWD
NOISY/MISSING DATA	Y	
CURVES/LOGS Depth Matched	Y	
Rm MEASUREMENT	Y	
LLS/LLD/CHECK	Y	
PERF/RHOB CHECK	Y	
LOG HEADER/TAIL	Y	OK
PRINT/FILM QUALITY		To be sent from town after TD logs are recorded
CORRELATION PASSES		Nil.

COMMENTS:

Suite 1/Run 1:
PEX-HALS failed on first descent. Return current was not established. Pulled out of hole and swapped backup DLT for HALS.
Deep resistivity failed at 1665m. Lost data between 1665m to 1325m. While attempting to RIH to re-acquire Deep resistivity, unable to open callipers, so could not RIH. Logged out and decided to use down log data to fill in missing data. (1260m to 1180m)
Casing SLB 775m, Driller 778m. Replayed logs from 775m after instructions from AP.
Logger TD: 2512m (hung up) vs Drillers TD 2550m

ENGINEERS COMMENTS (If this report has not been discussed with the Engineer state reason)

SECTION 3.2: SUITE 2 – FINAL LOGGING

SECTION 3.2.1: SUITE 2 - LOGGING ORDER FORM

Santos
A.B.N. 80 007 550 923

LOGGING ORDER

COMPANY: SANTOS – INPEX - MITTWELL

WELL: CALLISTER-1 **FIELD:** EXPLORATION

RIG: JACK BATES **STATE:** VICTORIA

LOCATION: OTWAY BASIN **BLOCK:** VIC / P51

LATITUDE: 38° 31' 59.690" South **LONGITUDE:** 141° 28' 23.462" East

NORTHING: 5734911.3m **EASTING:** 541241.7m

ELEVATIONS: **Water Depth:** 129.4m **RT:** 25.0m LAT **DF**: 29.0m
RT-Seabed : 158.4m

914mm HOLE: 192m **762mm CSG:** 192m 310 ppf X-52

445mm HOLE: 787.5m **340mm CSG:** 778m 68 ppf L-80 TER

311mm HOLE: 2550m **244mm CSG:** 2538m

216mm HOLE: 3914m

MUD SYSTEM: KCl / PHPA **CIRCULATION STOPPED: 01:00 hrs on 05/11/04**

WT: 1.67 **VISC: 57** **PV/YP:** 58/36 **PH**: 9.4 **FLUID LOSS:** 4.8 **CHL**: 51000
** See attached Mud report for additional mud properties

GEOLOGIST: R. Subramanian / F. Fernandes / M. Lahiff

INFORMATION GIVEN ABOVE IS TO BE USED ON LOG HEADING SHEETS.

HOLE CONDITIONS: (TIGHT SPOTS, DEVIATION, COALS, BARITE IN MUD, ETC)
Good hole conditions expected.
Maximum Deviation @ 3899m = 2.70°
Barite in mud = 284 lbs/bbl

DRILL STEM TESTS/CORED INTERVALS:
No DSTs were conducted. No open hole cores were cut.

COMMENTS: (TO BE INCLUDED IN REMARKS SECTION ON HEADER SHEET)

LOGS:

PROGRAM CONFIRMED WITH OPERATIONS GEOLOGIST AT 07:00 hrs ON 05-11-04

PROGRAM VARIES FROM PRE-SPUD NOTES: **YES**: [ ] **NO:** [X]

LOG	INTERVAL	REPEAT SECTION / Comments
RUN 1: Triple Combo		
Resistivity-Caliper-SP	TD to Casing Shoe	No repeat section required, check repeatability with down log. 244mm Shoe @ 2538m
Sonic (Upper Dipole)	TD to Casing Shoe	
Neutron Density	TD to Casing Shoe	
GR	TD to Casing Shoe	
Spectral GR	TD to Casing Shoe	
RUN 2: MDT-GR	Points to be advised post Run 1	
RUN 3: CMR		Section to be advised
RUN 4: MSCT-GR		To be advised post Run 1
RUN 5: CSI CHECK SHOT		To be advised post Run 1

REMARKS: (ALL OPERATIONS AS PER CURRENT SANTOS OPERATING PROCEDURES)

1. TENSION CURVE - TO BE DISPLAYED ON LOG FROM T.D. TO CASING SHOE.
2. ALL CALIBRATIONS IN CASING MUST BE VERSUS DEPTH.
3. ALL THERMOMETER READINGS TO BE RECORDED ON LOG
4. ALL SCALES AND PRESENTATIONS TO CONFIRM TO STANDARDS UNLESS OTHERWISE ADVISED.
5. THE FIELD/EDIT TAPE MUST BE A MERGED COPY OF ALL LOGS RUN. SEPARATE TAPES ARE ONLY ACCEPTABLE AS AN INTERIM MEASURE.
6. ANY CHANGE FROM STANDARD PROCEDURES/SCALES TO BE NOTED IN REMARKS SECTION.
7. RM, RMF, RMC AND BHT MUST BE ANNOTATED ON FAXED LOGS. FAXED LOGS SHOULD ALSO INDICATE IF ON DEPTH OR NOT.
8. LOG DATA IS TO BE TRANSMITTED AS SOON AS POSSIBLE AFTER ACQUISITION. IF ANY DELAYS ARE LIKELY OR IF DATA TRANSMISSION WILL ADVERSELY EFFECT THE OPERATION THEN THE WELLSITE GEOLOGIST MUST BE IMMEDIATELY INFORMED.
9. THE WELLSITE GEOLOGIST MUST BE INFORMED IMMEDIATELY OF ANY TOOL OR HOLE PROBLEMS, LOST TIME OR ANY OTHER EVENT WHICH MAY AFFECT THE LOGGING OPERATIONS.

SECTION 3.2.2: SUITE 2 - ELECTRIC LOGGING TIME SUMMARY

Santos

Geology Operations

ELECTRIC LOGGING TIME SUMMARY

LOGGING UNIT:	1801	**LEFT BASE:**	01/11/04	**WELL NAME:**	CALLISTER-1
START DATE:	05/11/04	**ARRIVED @ WELLSITE:**	01/11/04	**TRIP NUMBER:**	Suite 2 / Run 1
END DATE:	11/11/04	**INITIAL RIG UP:**	26/10/04	**WELLSITE GEOLOGIST:**	R Subramanian / F. Fernandes
DEPTH DRILLER:	3914m	**FINAL RIG DOWN:**	11/11/04	**LOGGING ENGINEER:**	Dimitri / Carolina
DEPTH LOGGER:	3917m	**RETURN TO BASE:**	12/11/04	**PAGE / DATE:**	1 (05/11/04)

DATE / TIME	RIG UP / DOWN	TOOL CHECK	RIH / POOH	LOGGING	DATA TX	LOST TIME SLB	I. O.	WIPER TRIP	LOST TIME OTHERS	OTHERS	COMMENTS / REMARKS
00:00											
:30											
01:00											
:30											
02:00											
:30											
03:00											
:30											
04:00											
:30											
05:00											
:30											
06:00											
:30											
07:00											
:30											
08:00											
:30											
09:00											
:30											
10:00											
:30											
11:00											**SUITE 1 / RUN 1: TRIPLE COMBO**
:30										X	11:30 Safety Meeting
	X										11:45 Rig up compensator system
TOTALS	**0.25**									**0.25**	

WSG (SIGN)	**ENGINEER(SIGN)**

TOOLS RUN:

TOOLS RUN:

TOOLS RUN:

LOGGING UNIT:	1801	WELL NAME	CALLISTER-1	PAGE	1A 05/11/04

DATE / TIME	RIG UP / DOWN	TOOL CHECK	RIH / POOH	LOGGING	DATA TX	LOST TIME SLB	I. O.	WIPER TRIP	LOST TIME OTHERS	OTHERS	COMMENTS / REMARKS
12:00	X										
	X										12:15 Commence rig up
:30	X										
	X										
13:00										X	13:00 Rig Down – Check Influx in Trip Tank
										X	
:30										X	13:30 Rig up again after all clear about flow in TT
	X										
14:00		X									14:00 Tool checks
		X									Load sources
:30	X										17:30 Makeup Toolstring
	X										14:45 Change out faulty HNGS (Spectral GR)
15:00	X										
			X								15:20 Compensating
:30			X								15:30 RIH @ 5400 ft/hr
			X								
16:00			X								
			X								
:30			X								16:30 RIH inside casing at 1600m
			X								
17:00			X								17:00 At casing shoe
				X							17:15 Log Casing Shoe @ 2538m (L), 2538m (D)
:30			X								17:20 Hanging up 2750m down.
			X								
18:00				X							18:00 Logging down @ 3100m
				X							Logging down at
:30				X							
				X							
19:00				X							
				X							19:00 Calibrate tools at 3800m while RIH
:30				X							19:30 Record Up log, Logger's TD=3917m
				X							
20:00				X							20:00 Pulling tight hole from 3149m – record O/P of
				X							8500-5000 Klbs
:30				X							
				X							
21:00				X							
				X							21:25 Closed Caliper due to poor hole conditions at
:30				X							2990m.
				X							
22:00				X							
				X							22:12 Open Caliper @ 2670m
:30				X							22:30 At the casing shoe, logged shoe @ 2538m
			X								22:40 Close Calipers, Stop recording up log at
23:00			X								2475m, POOH.
			X								
:30			X								
			X								
TOTALS	**2.0**	**0.50**	**3.75**	**5.0**						**0.75**	

WSG (SIGN)	ENGINEER(SIGN)
Subra / Fred	Carolina / Demitri

TOOLS RUN 1:	TRIPLE COMBO
TOOLS RUN:	
TOOLS RUN:	

SERVICE QUALITY SUMMARY

CLIENT WSG					ENGINEER					
1	2	3	4	5	1	2	3	4	5	
										SAFETY
										PROMPTNESS
										TOOL & SURFACE SYSTEM PERFORMANCE
										ATTITUDE & CO-OPERATION
										WELLSITE PRODUCTS / LOG QUALITY
										COMMUNICATIONS / TX PERFORMANCE
										OTHER (PLEASE SPECIFY)

1: Excellent - 2 - 3: Normal - 4 - 5: Very Poor

Geology Operations

Santos

ELECTRIC LOGGING TIME SUMMARY

LOGGING UNIT:	1801	**LEFT BASE:**	01/11/04	**WELL NAME:**	CALLISTER-1
START DATE:	05/11/04	**ARRIVED @ WELLSITE:**	01/11/04	**TRIP NUMBER:**	Suite 2 / Run 1
END DATE:	11/11/04	**INITIAL RIG UP:**	26/10/04	**WELLSITE GEOLOGIST:**	R Subramanian / F. Fernandes
DEPTH DRILLER:	3914m	**FINAL RIG DOWN:**	11/11/04	**LOGGING ENGINEER:**	Dimitri / Carolina
DEPTH LOGGER:	3917m	**RETURN TO BASE:**	12/11/04	**PAGE / DATE:**	2 (06/11/04)

DATE / TIME	RIG UP / DOWN	TOOL CHECK	RIH / POOH	LOGGING	DATA TX	LOST TIME SLB	I. O.	WIPER TRIP	LOST TIME OTHERS	OTHERS	COMMENTS / REMARKS
00:00			X								
	X										00:15 Rig down Run 1.
:30	X										
	X										
01:00	X										
	X										
:30	X										
	X										
02:00	X										
	X										02:30 Rig down complete, Rig to Santos
:30								X			02:30 RIH on wiper trip
								X			
03:00								X			
								X			
:30								X			
								X			
04:00								X			
								X			
:30								X			
								X			
05:00								X			
								X			
:30								X			
								X			
06:00								X			06:00 Bit @ 500m
								X			
:30								X			
								X			
07:00								X			
								X			
:30								X			
								X			
08:00								X			
								X			
:30								X			
								X			
09:00								X			09:00 Break circulation at casing shoe
								X			
:30								X			
								X			
10:00								X			Wash down "trouble" section from 2650m
								X			
:30								X			
								X			
11:00								X			
								X			
:30								X			
								X			
TOTALS	**2.25**	**0.25**						**9.50**			

WSG (SIGN)	**ENGINEER(SIGN)**
Subra / Fred	Carolina / Demitri

TOOLS RUN 1:	TRIPLE COMBO
TOOLS RUN:	
TOOLS RUN:	

LOGGING UNIT:	1801	WELL NAME	CALLISTER-1	PAGE	2A 06/11/04

DATE / TIME	RIG UP / DOWN	TOOL CHECK	RIH / POOH	LOGGING	DATA TX	LOST TIME SLB	I. O.	WIPER TRIP	LOST TIME OTHERS	OTHERS	COMMENTS / REMARKS
12:00								X			
								X			
:30								X			
								X			
13:00								X			
								X			
:30								X			
								X			
14:00								X			
								X			
:30								X			Finish washing to 3100m.
								X			Run in hole.
15:00								X			
								X			
:30								X			
								X			
16:00								X			
								X			
:30								X			
								X			
17:00								X			At bottom 3914m. Circulate hole clean.
								X			
:30								X			
								X			
18:00								X			
								X			
:30								X			
								X			
19:00								X			
								X			
:30								X			
								X			
20:00								X			
								X			
:30								X			
								X			
21:00								X			
								X			
:30								X			
								X			
22:00								X			22:00 Pull out of hole to conduct MDT's
								X			
:30								X			
								X			
23:00								X			
								X			
:30								X			
								X			
								12.00			

TOTALS

WSG (SIGN)	ENGINEER(SIGN)

TOOLS RUN	
TOOLS RUN:	
TOOLS RUN:	

SERVICE QUALITY SUMMARY										
CLIENT WSG					ENGINEER					
1	2	3	4	5	1	2	3	4	5	
										SAFETY
										PROMPTNESS
										TOOL & SURFACE SYSTEM PERFORMANCE
										ATTITUDE & CO-OPERATION
										WELLSITE PRODUCTS / LOG QUALITY
										COMMUNICATIONS / TX PERFORMANCE
										OTHER (PLEASE SPECIFY)
1: Excellent - 2 - 3: Normal - 4 - 5: Very Poor										

Geology Operations

Santos

ELECTRIC LOGGING TIME SUMMARY

LOGGING UNIT:	1801	**LEFT BASE:**	01/11/04	**WELL NAME:**	CALLISTER-1
START DATE:	05/11/04	**ARRIVED @ WELLSITE:**	01/11/04	**TRIP NUMBER:**	SUITE 2
END DATE:	11/11/04	**INITIAL RIG UP:**	26/10/04	**WELLSITE GEOLOGIST:**	R Subramanian / F. Fernandes
DEPTH DRILLER:	3914m	**FINAL RIG DOWN:**	11/11/04	**LOGGING ENGINEER:**	Dimitri / Carolina
DEPTH LOGGER:	3917m	**RETURN TO BASE:**	12/11/04	**PAGE / DATE:**	3 (07/11/04)

DATE / TIME	RIG UP / DOWN	TOOL CHECK	RIH / POOH	LOGGING	DATA TX	LOST TIME SLB	I. O.	WIPER TRIP	LOST TIME OTHERS	OTHERS	COMMENTS / REMARKS
00:00								X			
								X			
:30								X			
								X			
01:00								X			
								X			
:30								X			
								X			
02:00								X			
								X			
:30								X			
								X			
03:00								X			
								X			
:30								X			
								X			03:45 Flow check at the shoe
04:00								X			
								X			
:30								X			
								X			
05:00								X			
								X			
:30								X			
								X			
06:00								X			
								X			
:30								X			
								X			
07:00								X			
								X			
:30								X			
								X			
08:00								X			
								X			
:30								X			
								X			
09:00								X			
								X			
:30								X			
								X			
10:00								X			10:15 Complete Wiper trip
	X										**RUN 2: MDT-GR (1st DESCENT)**
:30	X										10:15 Rig up compensator lines
	X										
11:00	X										11:00 Rig up sheaves
	X										
:30	X										11:30 Pick up tools
	X										

WSG (SIGN)	ENGINEER(SIGN)

TOTALS

1.75							**10.25**		

TOOLS RUN: MDT-GR (Run-2)

TOOLS RUN:

TOOLS RUN:

LOGGING UNIT:	1801	WELL NAME	CALLISTER-1	PAGE	3A 07/11/04

DATE / TIME	RIG UP / DOWN	TOOL CHECK	RIH / POOH	LOGGING	DATA TX	LOST TIME SLB	I. O.	WIPER TRIP	LOST TIME OTHERS	OTHERS	COMMENTS / REMARKS
12:00	X										
	X										Compensate
:30			X								12:30 RIH
			X								
13:00			X								
			X								
:30			X								
			X								13:40 Stabilise at casing shoe
14:00			X								
			X								
:30				X							14:30 Correlate at 3400m
				X							
15:00				X							14:55 First pretest at 3445.8m No seal
				X							
:30				X							15:30 Test packer integrity in shale. No seal at
				X							3465m; OK at 3460m.
16:00				X							Dry test at 3482.6m
				X							
:30				X							Observe 3 consecutive No seals. POOH
				X							
17:00			X								POOH to check packer.
			X								
:30			X								Packer tested okay inside casing.
			X								Continue to POOH
18:00			X								
			X								
:30			X								18:30 Tool at surface. Packer ok. Replaced packer
			X								**RUN 3: MDT-GR (2nd DESCENT)**
19:00						X					19:00 Problem with power bulk-head between
						X					pump out module and MRSC (1 gallon) sample
:30						X					chamber. Change out power module.
						X					
20:00						X					
						X					
:30						X					
			X								20:45 Run in hole
21:00			X								
			X								
:30			X								
			X								
22:00			X								
			X								
:30			X								
			X								22:40 Stabilise tool at the casing shoe
23:00			X								22:50 Run in hole
			X								
:30				X							23:25 Conduct Correlation pass at 3400m
				X							23:45 Record pressure survey @ 3445.8
											WSG (SIGN) / **ENGINEER(SIGN)**
						TOTALS					
	0.50		**3.75**	**2.50**		**1.75**					**TOOLS RUN** MDT-GR (Run 2)
			3.00	**0.50**							**TOOLS RUN:** MDT-GR (Run 3)
											TOOLS RUN:

SERVICE QUALITY SUMMARY										
CLIENT WSG					**ENGINEER**					
1	2	3	4	5	1	2	3	4	5	
										SAFETY
										PROMPTNESS
										TOOL & SURFACE SYSTEM PERFORMANCE
										ATTITUDE & CO-OPERATION
										WELLSITE PRODUCTS / LOG QUALITY
										COMMUNICATIONS / TX PERFORMANCE
										OTHER (PLEASE SPECIFY)
1: Excellent - 2 - 3: Normal - 4 - 5: Very Poor										

Geology Operations

Santos

ELECTRIC LOGGING TIME SUMMARY

LOGGING UNIT:	1801	**LEFT BASE:**	01/11/04	**WELL NAME:**	CALLISTER-1
START DATE:	05/11/04	**ARRIVED @ WELLSITE:**	01/11/04	**TRIP NUMBER:**	SUITE 2
END DATE:	11/11/04	**INITIAL RIG UP:**	26/10/04	**WELLSITE GEOLOGIST:**	R Subramanian / F. Fernandes
DEPTH DRILLER:	3914m	**FINAL RIG DOWN:**	11/11/04	**LOGGING ENGINEER:**	Dimitri / Carolina
DEPTH LOGGER:	3917m	**RETURN TO BASE:**	12/11/04	**PAGE / DATE:**	4 (08/11/04)

DATE / TIME	RIG UP / DOWN	TOOL CHECK	RIH / POOH	LOGGING	DATA TX	LOST TIME SLB	I. O.	WIPER TRIP	LOST TIME OTHERS	OTHERS	COMMENTS / REMARKS
00:00				X							
				X							
:30				X							
				X							
01:00				X							
				X							
:30				X							01:25 Correlation pass @ 3600m
				X							
02:00				X							
				X							02:20 Correlation pass @ 3730m
:30				X							
				X							
03:00				X							
				X							
:30				X							03:30 Conduct Seal test in shale @ 3400m
			X								03:40 Pull out of hole
04:00			X								**Conducted 26 Pre-Test on Runs 2 & 3**
			X								**5 Tight, 21 No seat**
:30			X								
			X								
05:00			X								
			X								
:30			X								
			X								
06:00	X										06:00 Tools at surface. Start rig down
	X										
:30	X										
	X										07:00 Complete rigging down MDT-GR
07:00	X										**RUN 4: CMR-GR**
	X										07:00 Start rig up
:30	X										
	X										07:45 Tools too light-floating in mud -
08:00										X	Also magnet is catching on casing
										X	08:15 Add DLT tools for weight
:30			X								08:30 Commence RIH
			X								08:45 Compensator on
09:00			X								
			X								
:30			X								09:30 RIH at 2000m
			X								
10:00		X									10:00 At 3470m. Correlate. Calibrate antenna
			X								
:30			X								10:45 Tag Bottom T=134.7°C
				X							10:45 Record Up Log @ 580 ft/hr or 175m/hr
11:00				X							11:00 Logging at 3840m
				X							
:30				X							
				X							

WSG (SIGN)	ENGINEER(SIGN)

TOTALS

1.00		**2.25**	**3.75**							**TOOLS RUN:** MDT-GR (Run 3)
1.00	**0.25**	**2.00**	**1.25**						**0.50**	**TOOLS RUN:** CMR-GR (Run 4)
										TOOLS RUN:

LOGGING UNIT:	1801	WELL NAME	CALLISTER-1	PAGE	4A 08/11/04

DATE / TIME	RIG UP / DOWN	TOOL CHECK	RIH / POOH	LOGGING	DATA TX	LOST TIME SLB	I. O.	WIPER TRIP	LOST TIME OTHERS	OTHERS	COMMENTS / REMARKS
12:00				X							
				X							
:30				X							12:30 Logging at 3590m
				X							
13:00				X							
				X							
:30				X							13:45 Finish CMR log at 3375m. Close caliper.
			X								13:45 RIH to "calibration" sand at 3470m
14:00		X									13:50 Correlate. Calibrate antennas
			X								14:05 POOH
:30			X								14:30 Inside casing shoe. Continue POOH
			X								
15:00			X								
			X								15:30 Tools at surface
:30	X										
	X										16:00 Complete CMR-GR
16:00	X										**RUN 5 : MSCT-GR**
	X										16:00 Rig up
:30	X										
	X										
17:00		X									17:00 Test MSCT tool at surface - okay
			X								17:15 Run in Hole
:30			X								
			X								
18:00			X								
			X								
:30			X								RIH to 3117m. Run aborted due to gain in Trip
			X								Tank. POOH to conduct wiper trip.
19:00			X								
			X								19:30 Tools at Surface
:30	X										19:45 Complete rig down
								X			19:45 Run in hole on wiper trip to 3914m
20:00								X			
								X			
:30								X			
								X			
21:00								X			
								X			
:30								X			
								X			
22:00								X			
								X			
:30								X			
								X			
23:00								X			
								X			
:30								X			
								X			
TOTALS	**0.50**	**0.25**	**1.50**	**1.75**							
	1.25	**0.25**	**2.25**	**-**				**4.25**			

WSG (SIGN)	ENGINEER(SIGN)

TOOLS RUN	CMR-GR
TOOLS RUN:	MSCT-GR
TOOLS RUN:	

SERVICE QUALITY SUMMARY

CLIENT WSG 1	2	3	4	5	ENGINEER 1	2	3	4	5	
										SAFETY
										PROMPTNESS
										TOOL & SURFACE SYSTEM PERFORMANCE
										ATTITUDE & CO-OPERATION
										WELLSITE PRODUCTS / LOG QUALITY
										COMMUNICATIONS / TX PERFORMANCE
										OTHER (PLEASE SPECIFY)

1: Excellent - 2 - 3: Normal - 4 - 5: Very Poor

Geology Operations

Santos

ELECTRIC LOGGING TIME SUMMARY

LOGGING UNIT:	1801	**LEFT BASE:**	01/11/04	**WELL NAME:**	CALLISTER-1
START DATE:	05/11/04	**ARRIVED @ WELLSITE:**	01/11/04	**TRIP NUMBER:**	SUITE 2
END DATE:	11/11/04	**INITIAL RIG UP:**	26/10/04	**WELLSITE GEOLOGIST:**	R Subramanian / F. Fernandes
DEPTH DRILLER:	3914m	**FINAL RIG DOWN:**	11/11/04	**LOGGING ENGINEER:**	Dimitri / Carolina
DEPTH LOGGER:	3917m	**RETURN TO BASE:**	12/11/04	**PAGE / DATE:**	5 (09/11/04)

DATE / TIME	RIG UP / DOWN	TOOL CHECK	RIH / POOH	LOGGING	DATA TX	LOST TIME SLB	I. O.	WIPER TRIP	LOST TIME OTHERS	OTHERS	COMMENTS / REMARKS
00:00								X			
								X			
:30								X			
								X			
01:00								X			
								X			
:30								X			
								X			
02:00								X			
								X			
:30								X			
								X			
03:00								X			
								X			
:30								X			
								X			
04:00								X			
								X			
:30								X			
								X			
05:00								X			
								X			
:30								X			
								X			
06:00								X			
								X			
:30								X			
								X			
07:00								X			
								X			
:30								X			
								X			
08:00								X			
								X			
:30								X			
								X			
09:00								X			
								X			
:30								X			
										X	09:45 Bit inside Casing, Slip and Cut drill line
10:00										X	
										X	
:30										X	
										X	
11:00										X	
										X	
:30										X	
										X	
											WSG (SIGN) / **ENGINEER(SIGN)**
								9.75		**2.25**	

TOTALS

TOOLS RUN: MSCT-GR

TOOLS RUN:

TOOLS RUN:

LOGGING UNIT:	1801	WELL NAME	CALLISTER-1	PAGE	5A 09/11/04

DATE / TIME	RIG UP / DOWN	TOOL CHECK	RIH / POOH	LOGGING	DATA TX	LOST TIME SLB	I. O.	WIPER TRIP	LOST TIME OTHERS	OTHERS	COMMENTS / REMARKS
12:00								X			12:00 Run in hole to 3914m
								X			
:30								X			
								X			
13:00								X			
								X			
:30								X			
								X			
14:00								X			
								X			
:30								X			
								X			
15:00								X			
								X			15:30 Circulate at bottom, recorded 530 Units
:30								X			trip gas
								X			
16:00								X			
								X			
:30								X			
								X			
17:00								X			
								X			17:15 Stopped Circulation
:30								X			17:30 POOH to run MSCT
								X			
18:00								X			
								X			
:30								X			
								X			
19:00								X			
								X			
:30								X			
								X			
20:00								X			
								X			
:30								X			
								X			
21:00								X			
								X			
:30								X			
								X			
22:00								X			
								X			
:30								X			
								X			
23:00								X			
								X			
:30								X			
								X			
											WSG (SIGN) / **ENGINEER(SIGN)**
								12.0			**TOOLS RUN** MSCT
											TOOLS RUN:
											TOOLS RUN:

TOTALS

SERVICE QUALITY SUMMARY										
CLIENT WSG					**ENGINEER**					
1	2	3	4	5	1	2	3	4	5	
										SAFETY
										PROMPTNESS
										TOOL & SURFACE SYSTEM PERFORMANCE
										ATTITUDE & CO-OPERATION
										WELLSITE PRODUCTS / LOG QUALITY
										COMMUNICATIONS / TX PERFORMANCE
										OTHER (PLEASE SPECIFY)
1: Excellent - 2 - 3: Normal - 4 - 5: Very Poor										

Geology Operations

Santos

ELECTRIC LOGGING TIME SUMMARY

LOGGING UNIT:	1801	**LEFT BASE:**	01/11/04	**WELL NAME:**	CALLISTER-1
START DATE:	05/11/04	**ARRIVED @ WELLSITE:**	01/11/04	**TRIP NUMBER:**	SUITE 2
END DATE:	11/11/04	**INITIAL RIG UP:**	26/10/04	**WELLSITE GEOLOGIST:**	R Subramanian / F. Fernandes
DEPTH DRILLER:	3914m	**FINAL RIG DOWN:**	11/11/04	**LOGGING ENGINEER:**	Dimitri / Carolina
DEPTH LOGGER:	3917m	**RETURN TO BASE:**	12/11/04	**PAGE / DATE:**	6 (10/11/04)

DATE / TIME	RIG UP / DOWN	TOOL CHECK	RIH / POOH	LOGGING	DATA TX	LOST TIME SLB	I. O.	WIPER TRIP	LOST TIME OTHERS	OTHERS	COMMENTS / REMARKS
00:00								X			
								X			
:30								X			
								X			
01:00								X			01:15 Complete Wiper Trip
	X										**RUN 5a : MSCT-GR**
:30	X										01:15 Rig up Compensator line
	X										01:45 Rig up shieves
02:00	X										
	X										
:30		X									02:30 Surface checks (2 markers dropped)
			X								02:45 Run in hole
03:00			X								
			X								
:30			X								03:30 Drop Marker 3 @ 1500m
			X								
04:00			X								04:00 Drop Marker 4 @ 2500m
				X							04:15 Conduct correlation pass from 3190-3125m
:30				X							04:30 Core No 1 @ 3158m (then drop Marker 5)
			X								04:4 Run in hole to 3885m
05:00				X							05:00 Conduct Correlation pass from 3885-3850m
				X							05:30 Core No 2 @ 3865m
:30				X							
				X							05:55 Core No 3 @ 3858m
06:00				X							
				X							06:20 Core No 4 @ 3849m
:30				X							06:30 Core No 5 @ 3809.5m
				X							06:40 Core No 6 @ 3802.0m
07:00				X							06:50 Core No 7 @ 3791.0m
				X							07:00 Correlation Pass at 3750-3700m
:30				X							07:15 Core No 8 @ 3749.5m
				X							07:30 Core No 9 @ 3700.0m
08:00				X							07:45 Core No 10 then Correlate @ 3600m
				X							08:15 Core No 11 @ 3620m
:30				X							08:30 Core No 12 @ 3614m, No 13 @ 3612.5m
				X							08:45 Core No 14 @ 3588m
09:00			X								09:00 POOH Core jammed inside barrel
			X								09:30 Pull into casing shoe. Work tool. Tool appears
:30			X								To be okay. Decide to RIH- Ops approval OK
				X							09:50 Correlate 3480-3435m
10:00				X							
				X							10:15 Core No 15 @ 3535m. Core No 16 @ 3526.5m
:30				X							10:45 Core No 17 @ 3482.6m
				X							10:50 Core No 18 @ 3481.0 - No GO ! Washout?
11:00				X							10:55 Core No 19 @ 3476.5m
				X							11:05 Core No 20 @ 3471m – Washout ?
:30				X							11:15 Core No 21 @ 3464m – core jamming.
				X							11:30 Core No 22 @ 3454.5m, No 23 @ 3452.5m
											WSG (SIGN) / **ENGINEER(SIGN)**
TOTALS											
	1.25	**0.25**	**2.50**	**6.75**				**1.25**			

TOOLS RUN:	MSCT-GR
TOOLS RUN:	
TOOLS RUN:	

LOGGING UNIT:	1801	WELL NAME	CALLISTER-1	PAGE	6A 10/11/04

DATE / TIME	RIG UP / DOWN	TOOL CHECK	RIH / POOH	LOGGING	DATA TX	LOST TIME SLB	I. O.	WIPER TRIP	LOST TIME OTHERS	OTHERS	COMMENTS / REMARKS
12:00				X							12:00 Abort No 23 after 1125secs slow ROP.
			X								12:05 No 24 @ 3446m and No 25 @ 3443m
:30				X							POOH to 3150m to re-try No 1 @ 3158m.
			X								12:30 Correlate at 3180-3070m (3191m sticky)
13:00			X								12:40 Core No 26 at 3158m. POOH @ 12:45m
			X								
:30			X								*** **RECOVERY:**
			X								**11 GOOD CORES, 3 PARTIAL CORES**
14:00	X										**12 MISSING (53.8% RECOVERY)**
	X										14:30 End of MSCT-GR run
:30	X										**RUN 6: CSI CHECKSHOT**
	X										14:30 Rig up
15:00			X								14:45 Compensate and RIH to shoe
			X								
:30			X								
			X								
16:00			X								16:15 At casing shoe
				X							
:30				X							16:40 Check shot inside casing
				X							16:45 Correlation pass at shoe (-0.4m)
17:00			X								RIH to 2900m
			X								Shoot checkshot.
:30			X								17:45 Run in hole to 3200m, Shoot checkshot
			X								17:45 Run in hole to 3903
18:00		X									18:00 Calibrate tools at 3903m
				X							18:15 Record checkshot surveys from 3903m
:30				X							Record surveys at 50m intervals
				X							T=280°F (138°C) after 24.25hrs
19:00				X							
				X							
:30				X							
				X							
20:00				X							
				X							
:30				X							
				X							
21:00				X							
				X							
:30				X							
				X							
22:00				X							
				X							
:30				X							
				X							
23:00				X							
				X							
:30				X							
				X							
TOTALS	**0.50**		**1.50**	**0.50**							**TOOLS RUN** MSCT
	0.50	**0.25**	**2.25**	**6.50**							**TOOLS RUN:** CSI CHECKSHOT
											TOOLS RUN:

WSG (SIGN)	ENGINEER(SIGN)

SERVICE QUALITY SUMMARY										
CLIENT WSG					ENGINEER					
1	2	3	4	5	1	2	3	4	5	
										SAFETY
										PROMPTNESS
										TOOL & SURFACE SYSTEM PERFORMANCE
										ATTITUDE & CO-OPERATION
										WELLSITE PRODUCTS / LOG QUALITY
										COMMUNICATIONS / TX PERFORMANCE
										OTHER (PLEASE SPECIFY)
1: Excellent - 2 - 3: Normal - 4 - 5: Very Poor										

Geology Operations

Santos

ELECTRIC LOGGING TIME SUMMARY

LOGGING UNIT:	1801	**LEFT BASE:**	01/11/04	**WELL NAME:**	CALLISTER-1
START DATE:	05/11/04	**ARRIVED @ WELLSITE:**	01/11/04	**TRIP NUMBER:**	SUITE 2
END DATE:	11/11/04	**INITIAL RIG UP:**	26/10/04	**WELLSITE GEOLOGIST:**	R Subramanian / F. Fernandes
DEPTH DRILLER:	3914m	**FINAL RIG DOWN:**	11/11/04	**LOGGING ENGINEER:**	Dimitri / Carolina
DEPTH LOGGER:	3917m	**RETURN TO BASE:**	12/11/04	**PAGE / DATE:**	7 (11/11/04)

DATE / TIME	RIG UP / DOWN	TOOL CHECK	RIH / POOH	LOGGING	DATA TX	LOST TIME SLB	I. O.	WIPER TRIP	LOST TIME OTHERS	OTHERS	COMMENTS / REMARKS
00:00				X							
				X							
:30				X							00:45 Lost signal at 600m. Pull out of hole
			X								
01:00			X								
	X										01:15 Tools at surface, Rig down Schlumberger.
:30	X										01:30 Rig down complete.
02:00											
:30											
03:00											
:30											
04:00											
:30											
05:00											
:30											
06:00											
:30											
07:00											
:30											
08:00											
:30											
09:00											
:30											
10:00											
:30											
11:00											
:30											
TOTALS	**0.50**		**0.50**	**0.75**							

WSG (SIGN)	**ENGINEER(SIGN)**

TOOLS RUN:	CSI CHECKSHOT
TOOLS RUN:	
TOOLS RUN:	

LOGGING UNIT:	1801	WELL NAME	CALLISTER-1	PAGE	7A 11/11/04

DATE / TIME	RIG UP / DOWN	TOOL CHECK	RIH / POOH	LOGGING	DATA TX	LOST TIME SLB	I. O.	WIPER TRIP	LOST TIME OTHERS	OTHERS	COMMENTS / REMARKS
12:00											
:30											
13:00											
:30											
14:00											
:30											
15:00											
:30											
16:00											
:30											
17:00											
:30											
18:00											
:30											
19:00											
:30											
20:00											
:30											
21:00											
:30											
22:00											
:30											
23:00											
:30											
TOTALS											

WSG (SIGN)	ENGINEER(SIGN)

											TOOLS RUN	
											TOOLS RUN:	
											TOOLS RUN:	

SERVICE QUALITY SUMMARY										
CLIENT WSG					ENGINEER					
1	2	3	4	5	1	2	3	4	5	
										SAFETY
										PROMPTNESS
										TOOL & SURFACE SYSTEM PERFORMANCE
										ATTITUDE & CO-OPERATION
										WELLSITE PRODUCTS / LOG QUALITY
										COMMUNICATIONS / TX PERFORMANCE
										OTHER (PLEASE SPECIFY)
1: Excellent - 2 - 3: Normal - 4 - 5: Very Poor										

SECTION 3.2.3: SUITE 2 – FIELD ELECTRIC LOGGING REPORT

SANTOS LIMITED

FIELD ELECTRIC LOG REPORT

WELL:	Callister-1	**GEOLOGIST:**	R. Subramanian and F. Fernandes
LOGGING Engr:	Dimitri / Carolina		
RUN NO:	Suite 1 / Run 1 to 3	**DATE LOGGED:**	05-11-04 to xx-11-04
DRILLERS DEPTH:	3914m	**LOGGERS DEPTH:**	3917m
ARRIVED ON SITE:	01-11-04		
ACTUAL LOG TIME:	29:15 hrs	**LOST TIME LOGGER:**	1:45 hrs
TOTAL TIME:	132:45 hrs	**LOST TIME OTHER:**	*4.15 hrs

- *Lost 45 minutes while investigating gain in Trip Tank & 15 minutes for safety meeting.
- Lost 1:45 hours while rigging up run 3.
- *Lost 3:15 hours while conducting cut & slip while wiper trip before run 5a.
- Total time includes 59 hours for wiper trips.

TYPE OF LOG	Triple Combo (Run 1)	MDT-GR (Run 2)	MDT-GR (Run 3)	CMR (Run 4)	MSCT-GR (Run 5)	MSCT-GR (Run 5a)
TIME CIRC. STOPPED	00:55 05/11/04	01:00 06/11/04	01:00 06/11/04	01:00 06/11/04	01:00 06/11/04	17:15 09/11/04
TIME TOOL RIG UP	11:30 05/11/04	10:15 06/11/04	18:30 06/11/04	07:00 07/11/04	16:00 06/11/04	01:15 10/11/04
TIME TOOL RIH	15:30 05/11/04	12:30 06/11/04	20:45 06/11/04	09:30 07/11/04	17:15 06/11/04	02:45 10/11/04
TIME TOOL RIG DOWN	02:30 06/11/04	18:30 06/11/04	07:00 07/11/04	16:00 07/11/04	19:45 06/11/04	14:30 10/11/04
TOTAL TIME	15:00 HRS	08:15 HRS	12:30 HRS	09:00 HRS	03:45 HRS	14:15 HRS

TYPE OF LOG	CSI CHECKSHOT (Run 6)
TIME CIRC. STOPPED	17:15 09/11/04
TIME TOOL RIG UP	14:30 10/11/04
TIME TOOL RIH	14:45 10/11/04
TIME TOOL RIG DOWN	01:30 11/11/04
TOTAL TIME	11:00 HRS

TYPE OF LOG	FROM (m)	TO (m)	REPEAT SECTION	TIME SINCE LAST CIRC	BHT
Triple-Combo GR Spectral GR Resistivity SP HCAL Sonic (Upper Dipole & WFT) Neutron-Density	 3877 3877 3917 3870 3867 3908 3885	 2442 2442 2442 2442 2442 2469 2446	Down log	19.30 hrs	131°C
MDT-GR (TOTAL : 26, 5 tight, 21 Lost Seals, No samples collected)	3400	3812	Run 1	26:40 hrs	132°C
CMR	3375	3917	Run 1	36:45 hrs	135°C
MSCT-GR (TOTAL : 26 Cores cut, 11 good, 3 partial,12 missing, 53.8% recovery)	3158m	3865m	Run 1	11:45 hrs	137°C
CSI CHECKSHOT	600m	3903m	Run 1	24:15 hrs	138°C

MUD SYSTEM: KCl – PHPA	WEIGHT: 1.69 SG
HOLE CONDITIONS: Good	

WELLSITE LOG QUALITY CONTROL CHECKS

LOG ORDER FORM	OK	MUD SAMPLE RESISTIVITY	OK	TOOL NO. / CODE CHECK	OK
OFFSET WELL DATA	OK; MWD Used	CABLE DATA CARD	OK	LOG SEQUENCE CONFIRM.	OK

LOG TYPE	Run 1 PEX-DLT	Run 2 & 3 MDT	Run 4 CMR-GR	Run 5 MSCT-GR	Run 6 CSI-GR	Run 7 CST-GR		REMARKS
CASING CHECK	Y							
SCALE CHECK	Y							
DEPTH Casing	Y							L=742m D=743’
CALIBRATIONS OK	Y		Y					
REPEATABILITY	Y							
LOGGING SPEED	1700/3000							
OFFSET WELL REPEATABILITY	Y							Compares with MWD/LWD
NOISY/MISSING DATA	Y							
CURVES/LOGS Depth Matched	Y	Y						
Rm MEASUREMENT	Y							
LLS/LLD/CHECK	Y							
PERF/RHOB CHECK	Y							
LOG HEADER/TAIL	Y							OK
PRINT/FILM QUALITY								To be sent from town
CORRELATION PASSES		Y	Y					OK

COMMENTS:

Run 1: Triple Combo

- 244mm Casing shoe at 2538m (L), 2538m (D)
- Total Depth: 3917m (L), 3914m (D)
- Replaced faulty HNGS (Spectral GR)
- Tools hanging up between 2700m and 3700m while running in the hole. While logging up, experienced overpull of 5000 to 8500kls between 3700m and 2700m.
- The Calipers were closed at 2994m due to excess amounts of overpull. Calipers were re-opened at 2641m.
- Wiper trip was performed after Run 1 due to tight hole conditions which were encountered during run 1.
- Due to tight hole, GR was jerky affecting correlation of subsequent logs to the 1st run

Run 2 & 3: MDT-GR

- Run 2 was aborted after conducting 3 consecutive "No Seals".
- One Shale test was okay, while another was again a "No Seal"
- Seal inside casing was okay.
- The packer was examined at surface for damage – none found.
- Replaced packer with larger hole diameter packer.
- While tool on surface, noticed power module between the pump out module & MRSC (1 gallon) sample chamber was not working.
- Lost 1:45 hrs while replacing the power module between the pump out module & MRSC (1 gallon) sample chamber.
- In total conducted 26 pre-test with 6 tight test, 20 no seat. Of the 26 pre-test 3 test conducted in shale (2 confirmed seat, 1 no seat) and 1 test conducted in the casing to confirm packer integrity in the casing while pulling out of the hole on run 2.

Run 4: CMR

- Tools too light-floating in mud while running in hole, also magnet catching on to casing.
- Added DLT tools to weigh up tool string.
- Bottom hole temperature recorded at 134.7degC.

Run 5: MSCT-GR

- Run aborted at 3117m after a observing a gain in the trip tank.
- A wiper trip was conducted to condition the well before attempting to conduct MSCT's.
- MSCT was re-run following the wiper trip.
- Of the 26 cores cut, 11 were good, 3 were partial recovery, 12 were lost
- Marker disks were found blocking the core catcher tube

Run 6: CSI CHECKSHOT

- Surveys were conducted from 3903m to 600m.

ENGINEERS COMMENTS (If this report has not been discussed with the Engineer state reason)

SECTION 3.2.4: SUITE 2 - MDT PRESSURE SURVEY RESULTS

Santos

MDT PRESSURE SURVEY

WELL: Callister 1 RT: 29.0 m Gauge Type : CQG
WITNESS: M. Lahiff Time since last circ : 21:50 hrs, 06/11/04 Probe/Packer Type : Large Diameter

TEST NO	FORMATION	DEPTH RT MD m	DEPTH SUBSEA m	FILE NO	TEST RESULTS PRE-TEST VOL cc	PRE-TEST TYPE	HYDRO BEFORE PSIA	FORM PRESS PSIA	HYDRO AFTER PSIA	TEMP deg Far	D/D MOB MD/CP	INTERPRETATION PRE-TEST RESULTS	COMMENTS
							MDT RUN 1						
				45									Correlation Run
1	Waarre C	3445.8	3416.8	46	10	Volumetric	8238.12			123.40		No Seat	20cc/min rate
2	Waarre C	3446.0	3417.0	47	10	Volumetric	8268.67			123.43		No Seat	
3	Waarre C	3453.0	3424.0	48	10	Volumetric	8289.68			123.74		No Seat	
4	Waarre B	3465.0	3436.0	49	10	Volumetric	8322.24			124.71		No Seat	Test in Shale
5	Waarre B	3460.0	3431.0	50	10	n/a	8231.23			125.25		n/a	Pump out Test in Shale at 20 cc/min - Obtained seat
6	Waarre A	3482.6	3453.6	51	10	Volumetric	8254.23		8254.23	125.40		Tight	Test curtailed
7	Waarre A	3471.0	3442.0	52	10	Volumetric	8254.23			125.60		No Seat	
8	Waarre A	3470.5	3441.5	53	10	Volumetric	8230.94			126.13		No Seat	
9	Waarre A	3471.5	3442.5	54	10	Volumetric	8232.00			126.54		No Seat	
10	Waarre A	3526.6	3497.6	55	10	Volumetric	8340.89			127.10		No Seat	
11		2524.3	2495.3	56	5+5	Volumetric	6077.45					Tight	Test in Casing - Obtained seat
							MDT RUN 2						
				60									Correlation Run
12	Waarre C	3445.8	3416.8	61	15	Volumetric	8154.10			126.22		No Seat	20cc/min rate
13	Waarre C	3453.0	3424.0	62	10	Volumetric	8162.77		8160.41	126.34		Tight	Test curtailed. 60cc/min rate
14	Waarre C	3471.0	3442.0	63	10	Volumetric	8188.25			126.63		No Seat	60cc/min rate
15	Waarre C	3470.5	3441.5	64	10	Volumetric	8186.70			127.88		No Seat	60cc/min rate
16	Waarre C	3478.4	3449.4	65	10	Volumetric	8199.50			128.46		No Seat	60cc/min rate
17	Waarre A	3526.6	3497.6	66	10	Volumetric	8329.40			127.84		No Seat	60cc/min rate
18	Waarre A	3587.8	3558.8	67	10	Volumetric	8426.39			127.71		No Seat	60cc/min rate
19	Waarre A	3588.0	3559.0	68	10	Volumetric	8427.10			127.71		No Seat	60cc/min rate
20	Waarre A	3613.4	3584.4	69	10	Volumetric	8517.80		8518.96	128.50		Tight	Test curtailed. 60cc/min rate
				70									Correlation Run
21	Waarre A	3700.0	3671.0	73	10	Volumetric	8684.11			131.67		No Seat	60cc/min rate
22	Waarre A	3699.5	3670.5	74	10	Volumetric	8682.15			128.46		No Seat	60cc/min rate
				75									Correlation Run
23	Waarre A	3790.7	3761.7	76	10	Volumetric	8894.73			130.29		No Seat	
24	Waarre A	3812.0	3783.0	77	10	Volumetric	8843.15			131.18		No Seat	100cc/min rate
25	Waarre A	3810.4	3781.4	78	10	Volumetric	8939.50			132.43		No Seat	120cc/min rate
26		3400.0	3371.0	79	10	Volumetric	8065.00			128.30		Tight	Test in shale at 60 cc/min rate - Obtained Seat

26 PRE-TESTS: 5 Tight, 21 No Seats
SAMPLES: No Samples

SECTION 3.3: MWD / LWD END OF WELL REPORT (Anadrill)

Santos

Callister-1

MWD – LWD End of Well Report

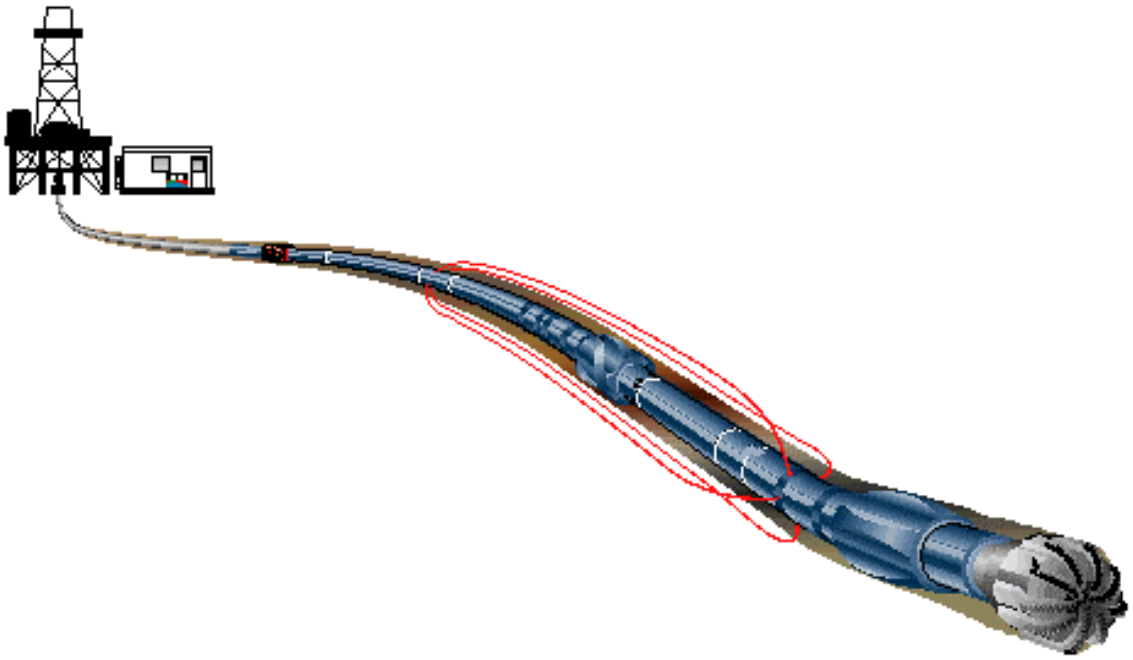

End of Well Report for Callister-1

Contents

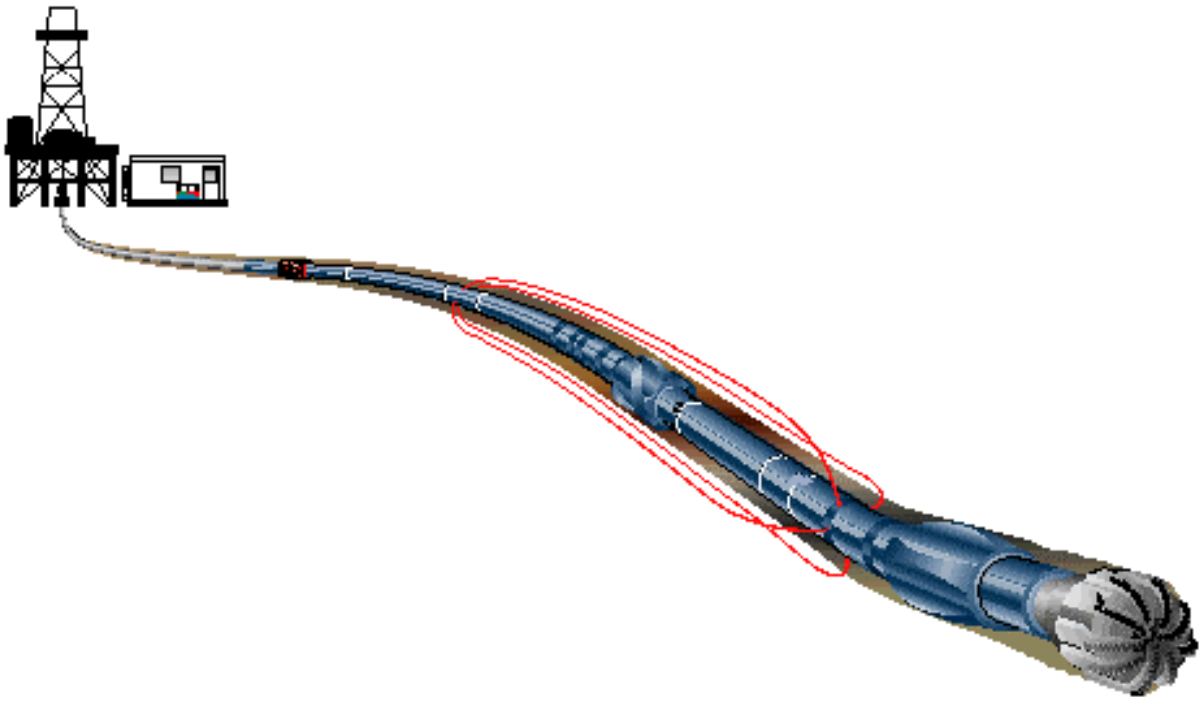

General Information

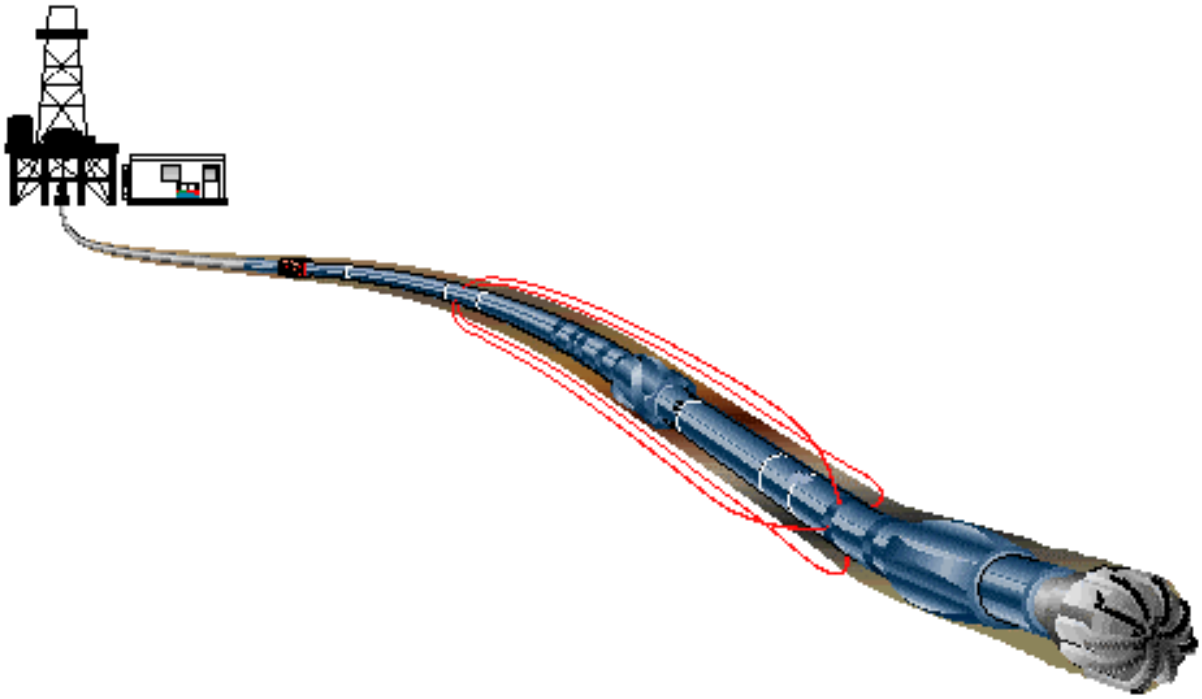

General Information

Well Name:	Callister-1	
Rig:	Jack Bates	
Field:	Exploration	
Location:	Otway Basin	
Country:	Australia	
Cell Members:	Achilles DeCastro	MWD / LWD Engineer
	Daniel Hastie	MWD / LWD Engineer
	Arnis Ahmad	MWD / LWD Engineer
	Bob Manjenic	Directional Driller
Town Contacts:	Jim Thompson	Operations Manager
	Hrvoje Spoljaric	Field Services Manager
	Alexander van den Tweel	DD Coordinator
Company Representatives:	Brian Houston	Company Man
	Jason Young	Company Man
	Patrick King	Drilling Engineer
	Ram Subramanian	Wellsite Geologist

Logging Overview

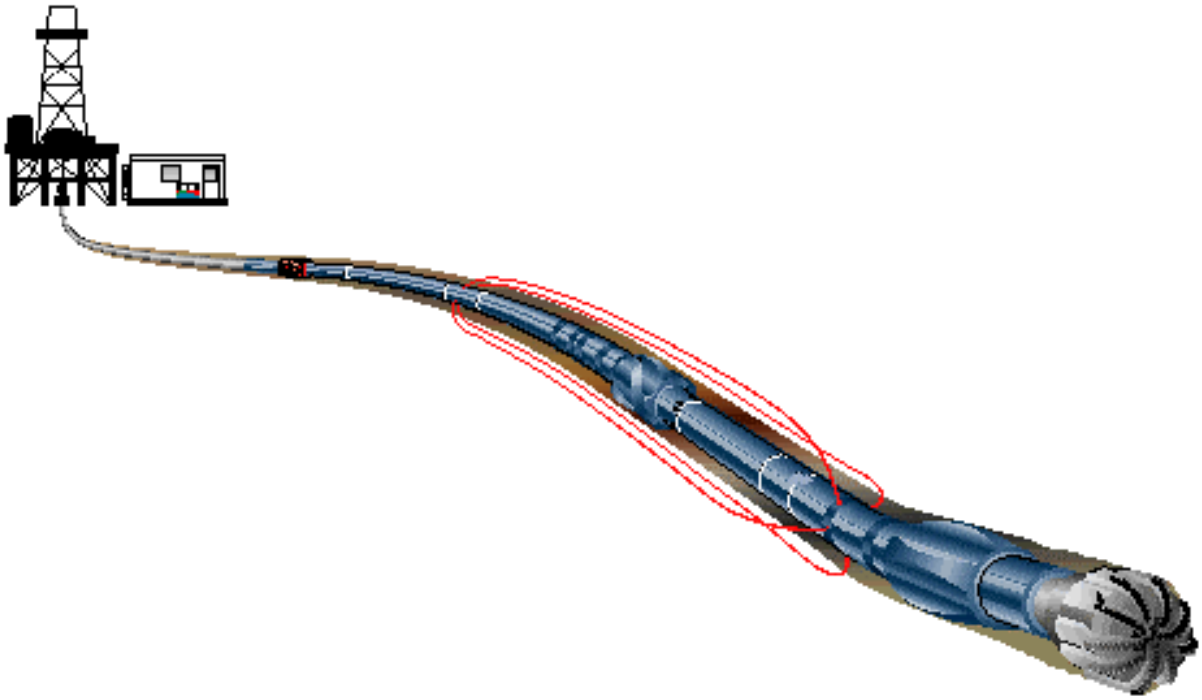

Logging Overview

Schlumberger Drilling and Measurements provided MWD, LWD and performance drilling services in the 12¼" and 8½" sections of the Callister-1 well.

In the 12¼" section, the following formation evaluation measurements were delivered in real-time and memory modes. The PowerPulse transmitted the survey data in real-time, however, this information is not recorded in the tool memory.

- CDR Gamma Ray, real-time
- CDR Phase Shift and Attenuation Resistivity, real-time
- CDR Annular Pressure and Temperature, real-time
- CDR Gamma Ray, recorded mode
- CDR Phase Shift and Attenuation Resistivity, recorded mode
- CDR Annular Pressure and Temperature, recorded mode
- Multi-Vibrational Chassis
- Performance Drilling

Run	Hole Size (in.)	Service	Start Depth (m)	Stop Depth (m)
1	12¼"	PowerPulse / CDR / Performance Drilling	787.50	990.00

12¼" Section (Run 787.50 m to 990.00 m MD):

The PowerPulse and Compensated Dual Resistivity (CDR) tools were utilized for surveying, logging, and monitoring downhole conditions for the 12¼" section for Callister-1. The PowerPulse was programmed to transmit real-time data at 12Hz / 3 bits per second, and the CDR was configured with a 6-second record rate. These configurations enabled real-time formation evaluation updates every 23.5 seconds, and a recorded data density greater than the Schlumberger standard of two data points per foot. This feature enabled the generation of high quality recorded mode logs over the entire section. APWD (Annular Pressure While Drilling), Downhole Temperature and MVC (Multi-Vibrational Chassis) were also used as part of an extensive monitoring process for borehole instability issues. All real-time and recorded mode data were transmitted/delivered to the client's office in town via Internet Web Witness (IWW).

The leak off test was carried out with the help of downhole measurements from the CDR and plotted in real-time, which is another valuable feature of the APWD. Drilling and downhole conditions provided an ideal setting for downhole transmission, as there were small or no noise present while drilling. It was noticed, however, that there was medium-level torsional shocks and stick-and-slip while drilling the first part of the section. ECD measurements were a good indication that there is good hole cleaning. From 871m MD, lateral and torsional shocks increased abruptly as the CDR was sending shock level 3 for consecutive frames. Drilling parameters were change to minimize the effects of shocks to the tool. Due to low ROP, it was decided to pull out of hole and change the bit. The CDR was dumped in the derrick and all recorded mode data were fully recovered. Resistivity measurements were affected in both real-time and recorded modes as seen in the Techlogs and recorded mode data. Although the tool was subjected to high shocks, it provided excellent data density through the run.

Run	Hole Size (in.)	Service	Start Depth (m)	Stop Depth (m)
2	12¼"	PowerPulse / CDR / Performance Drilling	990.0	2550.00

12¼" Section (Run 990.00 m to 2550.00 m MD):

The same PowerPulse and Compensated Dual Resistivity (CDR) tools were used on the succeeding run for of the 12¼" section for Callister-1. The PowerPulse programming configuration was kept at 12Hz / 3 bits per second, and the CDR was again configured to record every 6 seconds. APWD (Annular Pressure While Drilling), Downhole Temperature and MVC (Multi-Vibrational Chassis) were again utilized to monitor hole cleaning and other downhole parameters. All real-time and recorded mode data were transmitted/delivered to the client's office in town via Internet Web Witness (IWW).

Small shocks were seen in the beginning of the run. ECD was closely monitored as it ranged from 9.4ppg to 9.7ppg as drilling progressed. Torsional shocks again were high in this run, particularly on the earlier part of the run but were not enough to inhibit logging or drilling. Downhole noise was not again present in this run. High stick slip was seen from 1200m MD and below with low to high-level torsional shocks. Both tools provided excellent real-time data throughout the entire run and all recorded mode memory was recovered while the tool was dumped in the derrick. The tools recorded a total of 25G of shocks for the entire 12¼" section.

In the 8½" section, the following formation evaluation measurements were delivered in real-time and memory modes. The PowerPulse transmitted the survey data in real-time, however, this information is not recorded in the tool memory.

- CDR Gamma Ray, real-time
- CDR Phase Shift and Attenuation Resistivity, real-time
- CDR Annular Pressure and Temperature, real-time
- CDR Gamma Ray, recorded mode
- CDR Phase Shift and Attenuation Resistivity, recorded mode
- CDR Annular Pressure and Temperature, recorded mode
- Multi-Vibrational Chassis

Run	Hole Size (in.)	Service	Start Depth (m)	Stop Depth (m)
3	8½"	PowerPulse / CDR	2550.00	2662.00

8½" Section (Run 2550.00 m to 2662.00 m MD):

The PowerPulse and Compensated Dual Resistivity (CDR) tools were utilized for surveying, logging, and monitoring downhole conditions for the 8½" section for Callister-1. The PowerPulse was programmed to transmit real-time data at 12Hz / 3 bits per second, and the CDR was configured with a 10-second record rate. These configurations enabled real-time formation evaluation updates every 23.5 seconds, and a recorded data density greater than the Schlumberger standard of two data points per foot. This feature enabled the generation of high quality recorded mode logs over the entire section. APWD (Annular Pressure While Drilling), Downhole Temperature and MVC (Multi-Vibrational Chassis) again were also used to evaluate for borehole conditions. All real-time and recorded mode data were transmitted/delivered to the client's office in town via Internet Web Witness (IWW).

Drilling conditions were good, as there was minimal to no shocks present while drilling through the cement. Downhole noise was not present as well during the entire duration of the 8½" section. The APWD measurements provided clear indications of a good leak off test for the 8½" section. After 112m of drilling, penetration rate decreased instantly, and it was decided to pull out of hole and investigate. It was found out on surface that one of the bit nozzles was clogged. All data again was fully recovered from the CDR while the tool memory was dumped in the rotary table.

Run	Hole Size (in.)	Service	Start Depth (m)	Stop Depth (m)
4	8½"	PowerPulse / CDR	2662.00	3914.00

8½" Section (Run 2662.00 m to 3914.00 m MD):

The same set of PowerPulse and Compensated Dual Resistivity (CDR) tools were used for the second run of the 8½" section. The PowerPulse' s programming was kept to transmit real-time data at 12Hz / 3 bits per second, and the CDR was programmed to a 10-second record rate. These configurations enabled real-time formation evaluation updates every 23.5 seconds, and a recorded data density greater than the Schlumberger standard of two data points per foot. The CDR was programmed and monitored in the rotary table for 15 minutes. This feature enabled the generation of high quality recorded mode logs over the entire section. APWD (Annular Pressure While Drilling), Downhole Temperature and MVC (Multi-Vibrational Chassis) again were also used to evaluate for borehole conditions. All real-time and recorded mode data were transmitted/delivered to the client's office in town via Internet Web Witness (IWW).

Prior to tagging bottom, the borehole was washed to ensure that the hole is clean. Drilling commenced with an average ROP of 40m/hr. Downhole signal strength was high and there were no presence of noise while drilling. Shock level 3 was seen for 3 minutes as the tools entered the reservoir and then would dissipate. Stick slip was also prevalent through the entire run. Approximately at 3528m MD, there was an increase in connection gas (up to 2750 units) and thus the mud was weighed up to 12.0ppg. On a later reservoir, connection gas rose up to 5000 units, and the mud weight was increased to 12.2ppg. Shocks were also seen while entering reservoirs, and ECD and Annular Pressure data were affected. The crew advised the driller from time to time to pick up off bottom, slow collar rpm, and recycle pumps. This was done to prevent an inadvertent lost of tool functionality. Close to TD, very high torsional shocks and torque were measured, but disappeared after the next minute. On TD, the mud again was weighed up to 13.6ppg and the gas levels were monitored until they were below 200 units before the drillstring was pulled out. A wiper trip was done when the bit reached the 9-5/8" casing shoe to TD. Tools were laid out on the pipe deck and memory was fully downloaded. The Techlogs showed that the CDR was at it's optimum performance throughout the entire length of the run.

Geomagnetic and Survey Reference Criteria

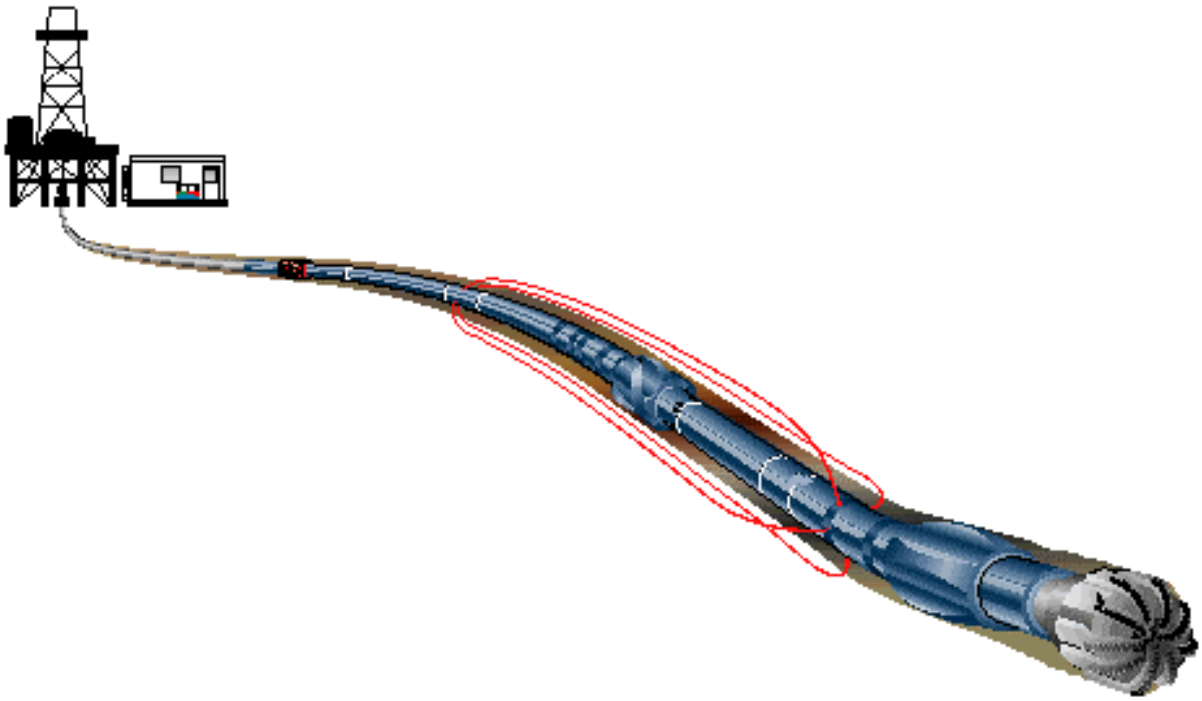

Geomagnetic and Survey Reference Criteria

Geomagnetic Data

Magnetic Model:	BGGM version 2004
Magnetic Date:	15 October 2004
Magnetic Field Strength:	1218.81 HCNT
Magnetic Declination:	10.27 degrees
Magnetic Dip:	-69.95 degrees

Survey Reference Criteria

Reference G:	1000.05 mgal
Reference H:	1218.81 HCNT
Reference Dip:	-69.95 degrees
G value Tolerance:	2.50 mgal
H value Tolerance:	6.00 HCNT
Dip Tolerance:	0.45 degrees

Survey Corrections Applied

Reference North:	Grid North
Magnetic Declination:	10.27 degrees
Grid Convergence:	-0.29 degrees
Total Azimuth Correction:	10.56 degrees
Vertical Section Azimuth:	0.00 degrees

Survey Reference Location

Callister-1 Final Coordinates

Latitude:	38° 31’ 59.690”	South
Longitude:	141° 28’ 23.462”	East
Easting:	541 241.70	meters
Northing:	5 734 911.30	meters
MGA:	Zone 54	

Note:

Data as per SANTOS “Rig Position Field Report”

Survey Report

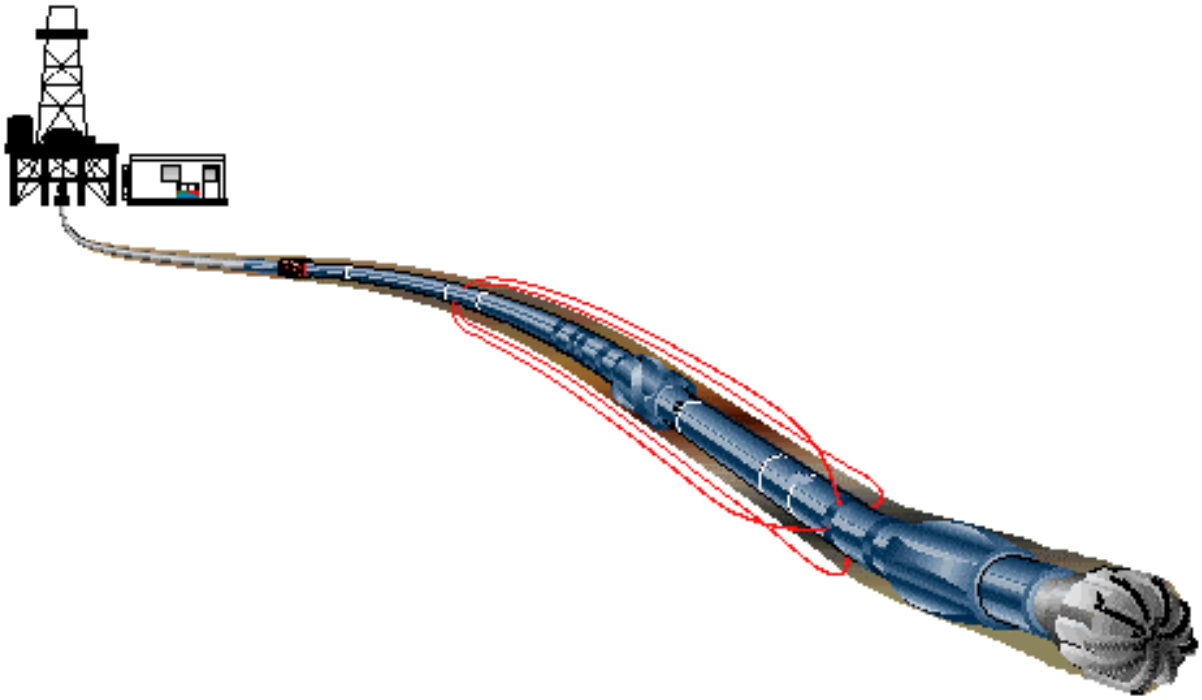

Schlumberger

IDEAL

Seq # -	Measured depth (m)	Incl angle (deg)	Azimuth angle (deg)	Course length (m)	TVD depth (m)	Vertical section (m)	Displ +N/S- (m)	Displ +E/W- (m)	Total displ (m)	At Azim (deg)	DLS (deg/ 100f)	Srvy tool type	Tool Corr (deg)
1	0.00	0.00	0.00	0.00	0.00	0.00	0.00	0.00	0.00	0.00	0.00	TIP	None
2	299.00	0.50	0.00	299.00	299.00	1.30	1.30	0.00	1.30	0.00	0.05	MWD_M	None
3	385.00	1.00	0.00	86.00	384.99	2.43	2.43	0.00	2.43	0.00	0.18	MWD_M	None
4	414.00	1.00	0.00	29.00	413.98	2.94	2.94	0.00	2.94	0.00	0.00	MWD_M	None
5	446.00	1.00	0.00	32.00	445.98	3.49	3.49	0.00	3.49	0.00	0.00	MWD_M	None
6	471.00	1.50	0.00	25.00	470.97	4.04	4.04	0.00	4.04	0.00	0.61	MWD_M	None
7	557.00	1.00	0.00	86.00	556.95	5.92	5.92	0.00	5.92	0.00	0.18	MWD_M	None
8	615.00	0.50	0.00	58.00	614.95	6.68	6.68	0.00	6.68	0.00	0.26	MWD_M	None
9	643.00	0.50	0.00	28.00	642.95	6.92	6.92	0.00	6.92	0.00	0.00	MWD_M	None
10	672.00	1.00	0.00	29.00	671.94	7.30	7.30	0.00	7.30	0.00	0.53	MWD_M	None
11	701.00	1.00	0.00	29.00	700.94	7.81	7.81	0.00	7.81	0.00	0.00	MWD_M	None
12	728.00	0.50	0.00	27.00	727.94	8.16	8.16	0.00	8.16	0.00	0.56	MWD_M	None
13	756.00	1.00	0.00	28.00	755.93	8.53	8.53	0.00	8.53	0.00	0.54	MWD_M	None
14	787.50	1.00	0.00	31.50	787.43	9.08	9.08	0.00	9.08	0.00	0.00	MWD_M	None
15	790.06	0.45	331.69	2.56	789.99	9.11	9.11	0.00	9.11	359.97	7.63	MWD	None
16	817.91	0.45	330.23	27.85	817.84	9.30	9.30	-0.11	9.30	359.32	0.01	MWD	None
17	847.21	0.69	337.63	29.30	847.14	9.56	9.56	-0.24	9.56	358.59	0.26	MWD	None
18	874.56	1.05	344.29	27.35	874.48	9.95	9.95	-0.37	9.96	357.90	0.42	MWD	None
19	903.94	1.25	333.65	29.38	903.86	10.50	10.50	-0.58	10.52	356.83	0.30	MWD	None
20	931.51	1.37	331.34	27.57	931.42	11.06	11.06	-0.87	11.09	355.49	0.14	MWD	None
21	959.28	0.22	170.41	27.77	959.19	11.30	11.30	-1.02	11.34	354.83	1.73	MWD	None
22	990.11	1.04	330.11	30.83	990.02	11.48	11.48	-1.15	11.54	354.27	1.23	MWD	None
23	1016.77	1.00	334.61	26.66	1016.67	11.90	11.90	-1.37	11.98	353.42	0.10	MWD	None
24	1037.31	1.03	330.72	20.54	1037.21	12.23	12.23	-1.54	12.32	352.82	0.11	MWD	None
25	1073.31	0.97	332.91	36.00	1073.20	12.78	12.78	-1.84	12.91	351.82	0.06	MWD	None
26	1101.55	1.29	326.69	28.24	1101.44	13.26	13.26	-2.12	13.43	350.91	0.37	MWD	None
27	1130.35	1.38	328.84	28.80	1130.23	13.82	13.82	-2.48	14.05	349.84	0.11	MWD	None
28	1159.59	1.19	326.05	29.24	1159.46	14.38	14.38	-2.83	14.65	348.87	0.21	MWD	None
29	1188.36	1.09	328.96	28.77	1188.23	14.86	14.86	-3.14	15.19	348.08	0.12	MWD	None
30	1216.58	1.00	326.02	28.22	1216.44	15.29	15.29	-3.41	15.67	347.42	0.11	MWD	None
31	1245.42	1.04	326.14	28.84	1245.28	15.72	15.72	-3.70	16.15	346.76	0.04	MWD	None
32	1274.17	1.16	320.05	28.75	1274.02	16.16	16.16	-4.03	16.66	345.99	0.18	MWD	None
33	1303.61	0.91	307.43	29.44	1303.46	16.53	16.53	-4.41	17.11	345.07	0.35	MWD	None
34	1332.69	0.59	319.05	29.08	1332.54	16.78	16.78	-4.69	17.43	344.39	0.37	MWD	None
35	1361.48	0.51	310.54	28.79	1361.32	16.98	16.98	-4.89	17.67	343.95	0.12	MWD	None
36	1390.36	0.53	314.61	28.88	1390.20	17.16	17.16	-5.08	17.89	343.51	0.04	MWD	None
37	1417.46	0.62	318.06	27.10	1417.30	17.35	17.35	-5.27	18.13	343.12	0.11	MWD	None
38	1447.76	0.51	316.13	30.30	1447.60	17.57	17.57	-5.47	18.40	342.72	0.11	MWD	None
39	1476.30	0.56	320.25	28.54	1476.14	17.77	17.77	-5.65	18.65	342.38	0.07	MWD	None
40	1503.90	0.49	302.77	27.60	1503.74	17.94	17.94	-5.83	18.86	341.99	0.19	MWD	None
41	1532.52	0.49	296.48	28.62	1532.36	18.06	18.06	-6.04	19.04	341.50	0.06	MWD	None
42	1560.05	0.41	312.01	27.53	1559.89	18.18	18.18	-6.22	19.21	341.11	0.16	MWD	None
43	1588.76	0.41	306.97	28.71	1588.60	18.31	18.31	-6.38	19.39	340.79	0.04	MWD	None
44	1674.20	0.58	302.18	85.44	1674.03	18.72	18.72	-6.99	19.99	339.53	0.06	MWD	None
45	1759.79	0.77	300.09	85.59	1759.62	19.24	19.24	-7.85	20.78	337.79	0.07	MWD	None
46	1847.14	0.95	294.58	87.35	1846.96	19.84	19.84	-9.02	21.79	335.55	0.07	MWD	None
47	1930.43	0.89	302.24	83.29	1930.24	20.47	20.47	-10.20	22.87	333.52	0.05	MWD	None
48	2017.36	0.91	307.00	86.93	2017.15	21.25	21.25	-11.32	24.07	331.95	0.03	MWD	None
49	2103.93	0.96	309.22	86.57	2103.71	22.12	22.12	-12.43	25.37	330.67	0.02	MWD	None
50	2187.51	0.94	306.90	83.58	2187.28	22.97	22.97	-13.52	26.66	329.52	0.02	MWD	None
51	2273.18	1.01	323.23	85.67	2272.94	24.00	24.00	-14.53	28.06	328.80	0.10	MWD	None
52	2358.91	0.97	322.75	85.73	2358.66	25.18	25.18	-15.43	29.53	328.51	0.01	MWD	None
53	2445.35	0.96	329.95	86.44	2445.08	26.39	26.39	-16.23	30.98	328.41	0.04	MWD	None
54	2524.68	1.01	330.09	79.33	2524.40	27.57	27.57	-16.91	32.35	328.48	0.02	MWD	None
55	2559.17	0.98	331.10	34.49	2558.89	28.09	28.09	-17.21	32.94	328.51	0.03	MWD	None

Schlumberger

IDEAL

Seq # -	Measured depth (m)	Incl angle (deg)	Azimuth angle (deg)	Course length (m)	TVD depth (m)	Vertical section (m)	Displ +N/S- (m)	Displ +E/W- (m)	Total displ (m)	At Azim (deg)	DLS (deg/ 100f)	Srvy tool type	Tool Corr (deg)
56	2616.28	1.09	335.82	57.11	2615.99	29.02	29.02	-17.67	33.97	328.67	0.07	MWD	None
57	2701.32	1.08	328.22	85.04	2701.01	30.44	30.44	-18.42	35.58	328.82	0.05	MWD	None
58	2786.73	0.87	334.96	85.41	2786.41	31.71	31.71	-19.12	37.03	328.91	0.09	MWD	None
59	2873.56	0.47	315.46	86.83	2873.24	32.56	32.56	-19.65	38.03	328.89	0.16	MWD	None
60	2960.21	0.37	282.26	86.65	2959.88	32.87	32.87	-20.17	38.57	328.47	0.09	MWD	None
61	3045.67	0.47	240.13	85.46	3045.34	32.76	32.76	-20.74	38.77	327.66	0.11	MWD	None
62	3129.38	0.54	224.15	83.71	3129.05	32.30	32.30	-21.31	38.70	326.58	0.06	MWD	None
63	3215.10	0.92	224.41	85.72	3214.76	31.52	31.52	-22.08	38.48	324.99	0.14	MWD	None
64	3303.12	1.31	213.64	88.02	3302.76	30.18	30.18	-23.13	38.02	322.53	0.15	MWD	None
65	3330.63	1.43	212.93	27.51	3330.27	29.63	29.63	-23.49	37.81	321.59	0.13	MWD	None
66	3358.35	1.62	214.79	27.72	3357.98	29.02	29.02	-23.90	37.59	320.52	0.22	MWD	None
67	3386.78	1.69	213.08	28.43	3386.39	28.33	28.33	-24.36	37.37	319.31	0.09	MWD	None
68	3414.60	1.67	214.65	27.82	3414.20	27.66	27.66	-24.81	37.16	318.10	0.05	MWD	None
69	3473.12	2.20	213.29	58.52	3472.69	26.02	26.02	-25.92	36.72	315.11	0.28	MWD	None
70	3528.68	2.23	216.78	55.56	3528.21	24.26	24.26	-27.15	36.41	311.78	0.08	MWD	None
71	3557.20	2.26	215.08	28.52	3556.71	23.36	23.36	-27.80	36.31	310.03	0.08	MWD	None
72	3586.67	2.18	216.17	29.47	3586.15	22.43	22.43	-28.47	36.24	308.23	0.09	MWD	None
73	3700.75	2.17	212.69	114.08	3700.15	18.86	18.86	-30.92	36.21	301.38	0.04	MWD	None
74	3787.16	2.50	209.01	86.41	3786.49	15.83	15.83	-32.71	36.34	295.83	0.13	MWD	None
75	3898.83	2.70	196.27	111.67	3898.05	11.18	11.18	-34.63	36.39	287.89	0.17	MWD	None
76	3914.50	2.70	196.27	15.67	3913.70	10.47	10.47	-34.84	36.38	286.73	0.00	Proj to TD	

Bit Run Summary

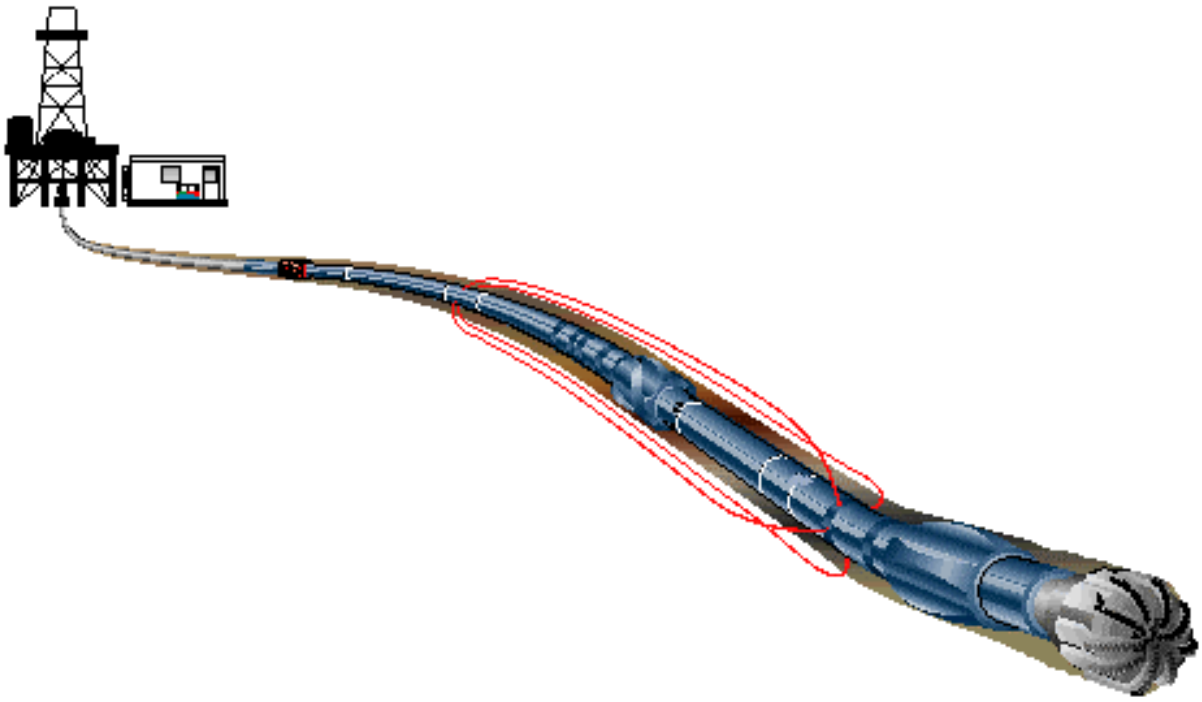

Schlumberger — DRILLING & MEASUREMENTS - RUN SUMMARY

RUN INFORMATION

Job Number	Company Rep.	Date In	Date Out	D&M Run Number	Rig Run Number
AWA-04-07	B. Houston/P. King	20-Oct-04	21-Oct-04	1	3

Company	SANTOS Ltd.	Grid Corr	Brief Run Summary	Bit Run Number	Cell Manager
Rig Name	Jack Bates	-0.29	Good Run	3	Achilles DeCastro
Well Name	Callister-1	Tot Corr	Hole Depth	D&M Crew	
Location	Otway Basin	10.56	From 787.5 m To 990 m	Daniel Hastie	
Mapfile	Mag Dec	PP Slot ID	Inclination (Drift)	Pumping Hours	Below Rotary Tbl Hrs
BGGM 2004	10.27		From 1.0 deg To 0.22 deg	19.4 hrs.	44.75 hrs.

BPS	Frequency	Mod Type	Azimuth			Rotary Hours	Rotary Distance
3	12 Hz	QPSK	From 0.0 deg	To 170.41 deg		8.6 hrs.	202.5 m
Pump Type	Pump Output	Pump Strk Len.	True Vertical Depth			Slide Hours	Slide Distance
Triplex	4.2 gpm	12 in	From 787.43 m	To 989.91 m		0.0 hrs.	0.0 m
Pump Liner ID	Min DLS	Max DLS	Hole Size	Water Depth	Air Gap	Drilling Hours	Drilling Distance
6.0 in	0.11	0.37	12.5 in	129.42 m	29.0 m	8.6 hrs.	202.5 m
Bent Sub Angle	Bent HSG Ang	Depth Max DLS	RKB Height	Ground Elev.	Mod Gap	Reaming Hours	Reaming Distance
deg	0.00 deg	874.56 m	29.0 m	-129.42 m	0.158 in	0.0 hrs.	0.0 m
Pulse Ht Thresh	Min Pulse Wdt	Max Pulse Wdt	Digit Time	T/F Arc	T/F Angle	On Bottom Hours	Service
				0.0 in	0.00 deg	8.6 hrs.	APWD & Dir. Surveys
Conn Phase Ang	Rise Const	Fall Const	H2S In Well	Damp Press	Signal Streng.	Last Casing	
deg			☐	800 psi	16.4	Size 13.375 in	Depth 778.3 m
Directional Driller(s)			Turbine RPM @ Min Flow Rate			Turbine RPM @ Max Flow Rate	
Bob Manjenic			RPM 2356.00	FR 830 gpm		RPM 3125.00	FR 1018 gpm

Run Objective: To drill and evaluate 12-1/4" section vertically to section TD.

EQUIPMENT DATA

Equipment Code	Pump Hrs Start	Pump Hrs Cum	SW Vers	Tool Size	Equipment Code	Pump Hrs Start	Pump Hrs Cum	SW Vers	Tool Size	Sensors Code	Real Time Hrs	Real Time Fail	Real Time Drilled	Recorded Time Hrs	Recorded Time Fail	Recorded Time Drilled
A962M-2099	0	19		9.62						MDC-HC-693	19.4		202.5	44.75		202.5
H524743-40040	0	19								RGM9-AC-9546	19.4		202.5	44.75		202.5
H524743-40041	0	19														
MDC-HC-693	0	19	7.0C00	9.50												
NMDC900L-D173	0	19		9.62												
RGM9-AC-9546	0	19	6.0B08	9.50												

Surface Sys	IDEAL/SPM	IDEAL/SPM				
Version	ID9_1C_01	HSPM9_2C_08				

DH MOTOR

Manufacturer	Schlumberger	Stage Length	4.80 m	Bit to Bend Dist.	0.00 m	Bearing Gap In	0.00
Type	A962GT	Rubber	RM100	RSS Mfr		Bearing Gap Out	0.00
Size	9.62	Sleeve Position		RSS Type		Radial Bearing Play	
Serial Number	2099	Sleeve Size	12.13 in	RSS Size		Thrust Bearing Play	
Lobe Config.	7:8	Motor Fail	☐	RSS SN			

OPERATING COND.

Max Circ Temp	42.00 C	Avg ROP	23.55 m/hr	Min Actl FlowRt	747.00 gpm	Max Shock Dur	8569.00 sec.
Min Circ Temp	31.00 C	Max ROP	93.80 m/hr	Avg PmpPres	2117.00 psi	Total DH Shocks (k)	375.00 k
End Mud Wt	8.80 lb/gal	Avg Surf RPM	76.00	PmpPres On Bot	2761.00 psi	CHECK SHOT	
End Funnel Vis	43.00 CPS	Min RPM	61.00	PmpPres Off Bot	2550.00 psi	Type	
End Plastic Vis	12.00 CPS	Max RPM	106.00	Avg Surf WOB	8.40 klbs	Depth	m
End Yield Point	15.00 CPS	Avg FlowRate	926.00 gpm	Avg Surf Torq	8040.00 ft-lbs	Inclination	deg
End Mud Resist	0.09	Max Actl FlowRt	1018.00 gpm	Max Shock Lev	3.00	Azimuth	deg

MUD

Company	MI Fluids	PH	11.00	Percent Sand	0.30 %	Additives	Barite
Brand	KCl/PHPA/Polym	Chlorides	42000.00	Percent Solids	3.80 %	Clean	☑
Type	Fresh Water	Other		Percent Oil	0.00 %		
LCM Type				LCM Size		LCM Concentation	

BHA

BHA Type	Motor	Tur Rotor Prt #		Turbine Config	600-1200gpm	Surface Screen	☐
Int TF Offset	0.00	Stator Prt #		Pulser Config		DFS Used	☐
Low Oil Flag	☐	Hrs @ Low Oil	0.00 hrs.	Stab Spacing	in	Formation	Claystone
DD Objectives Achieved	☑	If not, why?					

BIT

Bit Type	PDC	Other					
Manufacturer	Model	IADC Code	No. of Jets	Size of Jets	Bit TFA	Total Revs	Stick/Slip
Reed-Hycalog	DSX194HGUW		9	11	0.84	90526.00	YES
Inner Row	Outer Row	Dull Char	Location	Brng/Seals	Gauge (1/16")	Other Char	Reason Pulled
8	8	RO	A	X	1	ER	PR

FAILURE

Trans Fail	☐	Jamming	☐	Client Inconv.	☐	Surface Noise	☐
Pres Incr @ Fail	☐	Jamming Time	0.00 hrs.	Lost Time	0.00 hrs.	Down Hole Noise	☐
D&M Trip	☐	Sync Hours	20.67 hrs.	Surface Vib	☐	Surface Sys Failure	☐

SUMMARY

Good run. POOH to change bit.

Schlumberger

DRILLING & MEASUREMENTS - BHA DATA

Job Number	AWA-04-07
Run Number	1
BHA Number	3

Item	Description	Vendor	Material	Serial Number	Fishing Neck OD	Fishing Neck Length	Stab OD	OD	ID	Bot Connection Size	Bot Connection Type	Top Connection Size	Top Connection Type	Len	Cum Len
		UNITS			in	m	in	in	in					m	m
1	PDC Bit	Reed Hycalog	Steel	207742				12.25				6.63	Reg P	0.29	0.29
2	A962GT Mud Motor	Schlumberger	Steel	2099	9.63	1.07	12.13			6.63	Reg B	7.63	Reg B	10.03	10.32
3	Float Sub	Schlumberger	Steel	3287		0.90		9.50	3.00	7.63	Reg P	7.63	Reg B	0.90	11.22
4	Roller Reamer	Smith	Steel	XM 066	9.63		12.25	9.50	3.00	7.63	Reg P	7.63	Reg B	2.52	13.74
5	CDR9	Schlumberger	Monel	9546	9.50	0.73		9.63	5.88	7.63	Reg P	7.63	H90 B	7.20	20.94
6	PowerPulse	Schlumberger	Monel	W693	9.50	0.50		9.00	4.25	7.63	H90 P	7.63	Reg B	8.46	29.40
7	Roller Reamer	Smith	Steel	XM 065	9.50	0.75	12.25	9.50	3.00	7.63	Reg P	7.63	Reg B	2.52	31.92
8	NMDC	Schlumberger	Steel	D173	9.50	9.20		9.50	3.00	7.63	Reg P	7.63	Reg B	9.20	41.12
9	Crossover	TSF	Steel	X/O 2	9.50	1.32		9.50	3.00	7.63	Reg P	6.63	Reg B	1.32	42.44
10	7 x 8" HWDC	TSF	Steel		8.00	66.00		8.00	2.88	6.63	Reg P	6.63	Reg B	74.15	116.59
11	8" Jar		Steel	48907-C	8.00	0.61		8.00	3.00	6.63	Reg P	6.63	Reg B	9.78	126.37
12	2 x 8" DC	TSF	Steel		8.00	27.00		8.00	2.88	6.63	Reg P	6.63	Reg B	18.49	144.86
13	8" Accelator		Steel	DAH 01586	8.00	0.61		8.00	3.00	6.63	Reg P	6.63	Reg B	10.90	155.76
14	8" Drill Collar	TSF	Steel	DC 001	8.00	9.17		8.00	2.88	6.63	Reg P	6.63	Reg B	9.17	164.93
15	Crossover	TSF	Steel	X/O 9	8.00	1.14		8.00	3.00	6.63	Reg P	4.50	IF B	1.14	166.07
16	12 x 5" HWDP	TSF	Steel					6.63	3.00	4.50	IF P	4.50	IF B	110.77	276.84
17															
18															
19															
20															
21															
22															
23															
24															

TIME/DEPTH DETAILS

	1	2	3	4	5
Date/Time	20-Oct-04	21-Oct-04			
Field Engineer	AMCastro	DHastie			
Depth	760.14	903.37			
Average ROP	94.91	66.25			
Avg. Std. Pres.	1464.16	2150.00			
Desurger 1	800.00	800.00			
Desurger 2	800.00	800.00			
Tur. RPM @ FR	2460.94	3320.31			
FR @ Tur. RPM	800.00	1000.00			
Avg. RPM	82.00	66.00			
Max RPM	90.00	75.00			
Total Shocks	0.00	3.00			
Max Shock	0.00	0.00			
Avg. Surf. WOB	12.00	18.00			
Max Surf. WOB	15.00	20.00			
Avg. DH WOB	11.50	7.61			
Max DH WOB	14.00	8.31			
Avg. Surf. Torq.					
Max Surf. Torq.					
Avg. DH Torq.	2.30	3.40			
Max DH Torq.	5.60	4.40			
Formation Type	Cement	Claystone			
Friction					
Drag Up					
Drag Down					
Mud Weight	8.86	8.87			
Funnel Vis.					
Plastic Vis.					
Circ. Temp	28.00	35.00			
Signal Strength	15.10	16.00			
Bit Deviation	1.00	1.05			
Differential Pres.					

PREDICTED BHA TENDENCY

BHA is expected to hold vertically while drilling the 12.25in section.

Hookload	119.25	klbs	Wt. Below Jars	35.00	klbs
Pickup Wt.	74.20	klbs	Wt. Above Jars	16.00	klbs
Slack Wt.	45.00	klbs	Total Air Wt.	51.00	klbs

Stabilizer Description	Mid Pt To Bit	BLADE Type	BLADE Length	BLADE Width	GAUGE Length	GAUGE In	GAUGE Out
UNITS	m		in	in	in	in	in

Bit To Read Out Port			Bit To Measurement Port		
CDR	16.85	m	GR LWD	19.16	m
PPL	22.72	m	RES LWD	15.68	m
		m	APWD LWD	16.39	m
		m	D&I PPL	25.07	m
		m			m
		m			m
		m			m

BATTERY Tool	Unloaded (V) Before	Unloaded (V) After	Loaded (V) Before	Loaded (V) After	Run Hrs BOT	Run Hrs AMP	Cum Hrs BOT	Cum Hrs AMP
H524743-40040	21.74		20.56		24.60	3.44	24.60	3.44
H524743-40041	21.71		20.56		24.60	3.44	24.60	3.44

Schlumberger

DRILLING & MEASUREMENTS - TIME/DEPTH COMMENTS

PAGE 1

Job Number:	AWA-04-07
Run Number:	1

Date	Time	Depth	Operating Details
19-Oct-04	21:58	0.00	Initialized CDR9-9546 with 6-sec record rate. Tool was monitored for 10 minutes. All tool system
			checks passed.
	23:00	0.00	Started picking 9" tools from the pipe deck.
20-Oct-04	2:00	20.00	Tools BRT.
	3:45	30.00	SHT @ 620gpm. Signal Stength = 15.8psi, Bit Confidence = 99, Pump Pressure = 788.86psi,
			TRMP = 1640.63rpm. All systems checked passed.
	4:05	30.00	Finish SHT. Continue RIH.
	7:30	739.00	Tag cement bottom and started drilling cement.
	11:45	759.00	Tested choke and kill line and diverter system. This was followed by a annulus shut off drill to test the
			inegrity of the BOP.
	14:00	790.61	Start to circulate KCl/PHPA/Polymer mud system.
	14:30	790.61	Leak Off Test.
	16:05	790.61	Continue drilling 12.25in section.
	20:05	856.00	SHKRK 3 on CDR. Lat shock 3.5. Vibtor 3500. Informed CM, Pulled off bottom & released torque.
			Continue drilling 12.25in section.
	20:53	859.00	High shocks still present. Adjusting drilling parameters & continuing to monitor.
	21:27	874.21	Dump 100 barrels. Flow checks.
	23:10	874.21	Continue drilling 12.25in section.
21-Oct-04	0:00	893.88	Midnight Depth. Drilling ahead.
	9:00	986.00	Shocks encountered. Drilling parameters were changed to minimized shocks to the tools.
	7:00	987.00	Hard stringers were meet.
	11:40	989.25	Finish drilling.Circulate bottoms up. POOH to change bit.
	16:00	0.00	Tools ART.
	16:15	0.00	Tools are racked back in the derrick while CDR is being dumped for memory.

Schlumberger — DRILLING & MEASUREMENTS - RUN SUMMARY

RUN INFORMATION

Job Number	Company Rep.	Date In	Date Out	D&M Run Number	Rig Run Number
AWA-04-07	B.Houston, J.Young	21-Oct-04	26-Oct-04	2	4

Company	SANTOS Ltd.	Grid Corr	Brief Run Summary	Bit Run Number	Cell Manager
Rig Name	Jack Bates	-0.29	Good Run	4	Achilles DeCastro
Well Name	Callister-1	Tot Corr	Hole Depth	D&M Crew	
Location	OTway Basin	10.56	From 990 m To 2550 m	Daniel Hastie/Arnis Ahmad	
Mapfile	Mag Dec	PP Slot ID	Inclination (Drift)	Pumping Hours	Below Rotary Tbl Hrs
BGGM 2004	10.27		From 0.22 deg To 1.01 deg	76.10 hrs.	116.00 hrs.

BPS	Frequency	Mod Type	Azimuth	Rotary Hours	Rotary Distance
3	12 Hz	QPSK	From 170.41 deg To 330.09 deg	57.60 hrs.	1560.00 m
Pump Type	**Pump Output**	**Pump Strk Len.**	**True Vertical Depth**	**Slide Hours**	**Slide Distance**
Triplex	4.2 gpm	12 in	From 989.91 m To 2549.72 m	0.00 hrs.	0.00 m

Pump Liner ID	Min DLS	Max DLS	Hole Size	Water Depth	Air Gap	Drilling Hours	Drilling Distance
6.0 in	0.01	1.22	12.25 in	129.42 m	29.0 m	0 hrs.	0 m
Bent Sub Angle	**Bent HSG Ang**	**Depth Max DLS**	**RKB Height**	**Ground Elev.**	**Mod Gap**	**Reaming Hours**	**Reaming Distance**
deg	0 deg	990.11 m	29.0 m	-129.42 m	.158 in	0.00 hrs.	0.00 m
Pulse Ht Thresh	**Min Pulse Wdt**	**Max Pulse Wdt**	**Digit Time**	**T/F Arc**	**T/F Angle**	**On Bottom Hours**	**Service**
				0 in	0 deg	57.60 hrs.	APWD & Dir. Surveys
Conn Phase Ang	**Rise Const**	**Fall Const**	**H2S In Well**	**Damp Press**	**Signal Streng.**	**Last Casing**	
deg			☐	800 psi	9	Size 13.375 in	Depth 778.3 m

Directional Driller(s)	Turbine RPM @ Min Flow Rate	Turbine RPM @ Max Flow Rate
Bob Manjenic	RPM 2988.68 FR 620.00 gpm	RPM 3215.34 FR 1000.00 gpm

Run Objective Drill 12.25in section to section TD.

EQUIPMENT DATA

Equipment Code	Pump Hrs Start	Pump Hrs Cum	SW Vers	Tool Size	Equipment Code	Pump Hrs Start	Pump Hrs Cum	SW Vers	Tool Size	Sensors Code	Real Time Hrs	Real Time Fail	Real Time Drilled	Recorded Time Hrs	Recorded Time Fail	Recorded Time Drilled
A962M-2099	19	96		9.62						MDC-HC-693	76.1		0			
H524743-40040	19	96								RGM9-AC-9546	76.1		0	116		0
H524743-40041	19	96														
MDC-HC-693	19	96	7.0C00	9.50												
NMDC900L-D173	19	96		9.50												
RGM9-AC-9546	19	96	6.0B08	9.50												

Surface Sys	IDEAL/SPM	IDEAL/SPM
Version	ID9_1c_01	HSPM9_2C_08

DH MOTOR

Manufacturer	Schlumberger	Stage Length	4.80 m	Bit to Bend Dist.	0.00 m	Bearing Gap In	0.00
Type	A962GT	Rubber	RM100	RSS Mfr		Bearing Gap Out	
Size	9.62	Sleeve Position		RSS Type		Radial Bearing Play	
Serial Number	2099	Sleeve Size	12.13 in	RSS Size		Thrust Bearing Play	
Lobe Config.	7:8	Motor Fail	☐	RSS SN			

OPERATING COND.

Max Circ Temp	60.00 C	Avg ROP	35.10 m/hr	Min Actl FlowRt	35.10 gpm	Max Shock Dur	1.00 sec.
Min Circ Temp	48.00 C	Max ROP	122.80 m/hr	Avg PmpPres	2513.00 psi	Total DH Shocks (k)	0.09 k
End Mud Wt	9.10 lb/gal	Avg Surf RPM	99.00	PmpPres On Bot	2531.00 psi	CHECK SHOT	
End Funnel Vis	51.00 CPS	Min RPM	75.00	PmpPres Off Bot	2338.00 psi	Type	
End Plastic Vis	15.00 CPS	Max RPM	112.00	Avg Surf WOB	7.70 klbs	Depth	m
End Yield Point	23.00 CPS	Avg FlowRate	867.00 gpm	Avg Surf Torq	8.40 ft-lbs	Inclination	deg
End Mud Resist	0.09	Max Actl FlowRt	1008.00 gpm	Max Shock Lev	2.00	Azimuth	deg

MUD

Company	MI Fluids	PH	9.00	Percent Sand	0.75 %	Additives	Barite
Brand	KCl/PHPA/Polym	Chlorides	46000.00	Percent Solids	6.00 %	Clean	☑
Type	Fresh Water	Other		Percent Oil	0.00 %		
LCM Type				LCM Size		LCM Concentation	

BHA

BHA Type	Motor	Tur Rotor Prt #		Turbine Config	600-1200gpm	Surface Screen	☐
Int TF Offset	0.00	Stator Prt #		Pulser Config		DFS Used	☐
Low Oil Flag	☐	Hrs @ Low Oil	0.00 hrs.	Stab Spacing		Formation	Claystone
DD Objectives Achieved	☑	If not, why?					

BIT

Bit Type	PDC	Other					
Manufacturer	Model	IADC Code	No. of Jets	Size of Jets	Bit TFA	Total Revs	Stick/Slip
Reed-Hycalog	DSX104		5	14	0.75	648710.00	YES
Inner Row	Outer Row	Dull Char	Location	Brng/Seals	Gauge (1/16")	Other Char	Reason Pulled
6	5	WT	A	X	In	SS	TD

FAILURE

Trans Fail	☐	Jamming	☐	Client Inconv.	☐	Surface Noise	☐
Pres Incr @ Fail	☐	Jamming Time	0.00 hrs.	Lost Time	0.00 hrs.	Down Hole Noise	☐
D&M Trip	☐	Sync Hours	60.78 hrs.	Surface Vib	☐	Surface Sys Failure	☐

SUMMARY

Good run. 12.25in section was drilled to section TD with the same set of tools.

Schlumberger

DRILLING & MEASUREMENTS - BHA DATA

Job Number	AWA-04-07
Run Number	2
BHA Number	4

Item	Description	Vendor	Material	Serial Number	Fishing Neck OD	Fishing Neck Length	Stab OD	OD	ID	Bot Connection Size	Bot Connection Type	Top Connection Size	Top Connection Type	Len	Cum Len
		UNITS			in	m	in	in	in					m	m
1	PDC Bit	Reed Hycalog	Steel	10893				12.25				6.63	Reg P	0.32	0.32
2	A962GT Mud Motor	Schlumberger	Steel	2099	9.63	1.07	12.13			6.63	Reg B	7.63	Reg B	10.03	10.35
3	Float Sub	Schlumberger	Steel	3287		0.90		9.50	3.00	7.63	Reg P	7.63	Reg B	0.90	11.25
4	Roller Reamer	Smith	Steel	XM 066	9.63		12.25	9.50	3.00	7.63	Reg P	7.63	Reg B	2.52	13.77
5	CDR9	Schlumberger	Monel	9546	9.50	0.73		9.63	5.88	7.63	Reg P	7.63	H90 B	7.20	20.97
6	PowerPulse	Schlumberger	Monel	W693	9.50	0.50		9.00	4.25	7.63	H90 P	7.63	Reg B	8.46	29.43
7	Roller Reamer	Smith	Steel	XM 065	9.50	0.75	12.25	9.50	3.00	7.63	Reg P	7.63	Reg B	2.52	31.95
8	NMDC	Schlumberger	Steel	D173	9.50	9.20		9.50	3.00	7.63	Reg P	7.63	Reg B	9.20	41.15
9	Crossover	TSF	Steel	X/O 2	9.50	1.32		9.50	3.00	7.63	Reg P	6.63	Reg B	1.32	42.47
10	7 x 8" HWDC	TSF	Steel		8.00	66.00		8.00	2.88	6.63	Reg P	6.63	Reg B	74.15	116.62
11	8" Jar		Steel	48907-C	8.00	0.61		8.00	3.00	6.63	Reg P	6.63	Reg B	9.78	126.40
12	2 x 8" DC	TSF	Steel		8.00	27.00		8.00	2.88	6.63	Reg P	6.63	Reg B	18.49	144.89
13	8" Accelator		Steel	DAH 01586	8.00	0.61		8.00	3.00	6.63	Reg P	6.63	Reg B	10.90	155.79
14	8" Drill Collar	TSF	Steel	DC 001	8.00	9.17		8.00	2.88	6.63	Reg P	6.63	Reg B	9.17	164.96
15	Crossover	TSF	Steel	X/O 9	8.00	1.14		8.00	3.00	6.63	Reg P	4.50	IF B	1.14	166.10
16	12 x 5" HWDP	TSF	Steel					6.63	3.00	4.50	IF P	4.50	IF B	110.77	276.87
17															
18															
19															
20															
21															
22															
23															
24															

TIME/DEPTH DETAILS

	1	2	3	4	5
Date/Time	23-Oct-04	24-Oct-04	25-Oct-04	25-Oct-04	
Field Engineer	AMCastro	A.Ahmad	A.Ahmad	AMCastro	
Depth	1692.96	1904.00	2078.00	2413.79	
Average ROP	19.98	25.00	25.00	20.58	
Avg. Std. Pres.	2551.90	2500.00	2600.00	2905.63	
Desurger 1	800.00	800.00	800.00	800.00	
Desurger 2	800.00	800.00	800.00	800.00	
Tur. RPM @ FR	3125.00	3125.00	3164.00	3125.00	
FR @ Tur. RPM	900.00	875.00	895.00	900.00	
Avg. RPM	98.00	100.00	100.00	98.00	
Max RPM	102.00	103.00	105.00	105.00	
Total Shocks	0.75	0.09	0.09	0.09	
Max Shock	0.00	0.00	0.00	0.00	
Avg. Surf. WOB	3.50	5.00	5.00	11.00	
Max Surf. WOB	5.00	10.00	15.00	15.00	
Avg. DH WOB	2.76	3.00	6.00	8.60	
Max DH WOB	5.40	5.00	10.00	11.45	
Avg. Surf. Torq.	3.00	3.00	3.00	8.00	
Max Surf. Torq.	5.00	5.00	6.00	10.00	
Avg. DH Torq.	2.30	2.00	2.00	8.44	
Max DH Torq.	4.00	3.00	4.00	10.30	
Formation Type					
Friction					
Drag Up					
Drag Down					
Mud Weight	9.09	9.01	9.01	9.01	
Funnel Vis.	49.00	47.00	49.00	49.00	
Plastic Vis.	13.00	17.00	14.00	14.00	
Circ. Temp	46.00	50.00	52.00	57.00	
Signal Strength	12.60	11.50	10.50	5.89	
Bit Deviation	0.41	0.95	0.91	0.97	
Differential Pres.	200.00	200.00	200.00	200.00	

PREDICTED BHA TENDENCY

BHA is expected to hold vertically while drilling the 12.25in section.

Hookload	119.25	klbs	Wt. Below Jars	35.00	klbs
Pickup Wt.	74.20	klbs	Wt. Above Jars	16.00	klbs
Slack Wt.	45.00	klbs	Total Air Wt.	51.00	klbs

Stabilizer Description	Mid Pt To Bit	BLADE Type	BLADE Length	BLADE Width	GAUGE Length	GAUGE In	GAUGE Out
UNITS	m		in	in	in	in	in

Bit To Read Out Port			Bit To Measurement Port		
CDR	16.88	m	GR LWD	19.19	m
PPL	22.74	m	RES LWD	15.71	m
		m	APWD LWD	16.42	m
		m	D&I PPL	25.09	m
		m			m
		m			m
		m			m

BATTERY	Unloaded (V) Before	Unloaded (V) After	Loaded (V) Before	Loaded (V) After	Run Hrs BOT	Run Hrs AMP	Cum Hrs BOT	Cum Hrs AMP
Tool								
H524743-40040	21.74		20.56		19.00	3.44	43.00	6.88
H524743-40041	21.71		20.56		40.00	6.40	64.00	10.28

Schlumberger

DRILLING & MEASUREMENTS - TIME/DEPTH COMMENTS

PAGE 1

Job Number:	AWA-04-07
Run Number:	2

Date	Time	Depth	Operating Details
21-Oct-04	16:36	0.00	Initialized CDR9-9546 with a 6-second record rate. The tool was monitored and checked for 10 minutes.
			All systems check passed.
	18:00	0.00	Started making bit to 12.25in BHA.
	18:30	20.00	Tools BRT.
	23:00	276.00	SHT @ 620gpm. Signal Strength = 21.6 psi, Bit Confidence = 98, Pump Pressure = 1214.33 psi,
			TRPM = 2988.66 rpm. Good test.
	23:20	276.00	Finished SHT. Continue RIH.
22-Oct-04	0:00	990.00	Midnight Depth. Continue RIH.
	5:00	990.00	Tag bottom. Continue drilling 12.25in section.
	15:57	1250.00	High torsional shocks. D&M crew advised driller to pick up off bottom. After shocks were eliminated
			drilling re-commenced.
23-Oct-04	0:00	1403.78	Midnight Depth. Continue drilling 12.25in section.
	19:30	1815.00	Pumped 50 bbl of PHPA. Noticed decrease in SPPA as drilling resumed.
24-Oct-04	0:00	1899.00	Midnight Depth. Total pumping hrs for the past 24 hrs: 17.5 hrs.
	0:15	1902.00	Rig is having problem with elevator (at connection).
	1:03	1902.00	Drill ahead.
	1:50	1919.00	Top Drive problem. Pulled off bottom.
	3:13	1919.00	Decided to POOH to casing shoe to fix the problem. Geolograph off.
	12:35	778.00	Top Drive fixed. Running back in hole.
	14:36	1904.00	Started pumping to check hole ECD.
	14:55	1919.00	Continue drilling 12.25in section.
25-Oct-04	0:00	2066.00	Midnight Depth. Total pumping hrs for the past 24 hrs: 11.2 hrs.
	18:12	2413.43	SCR.
	22:02	2482.00	Flow checking.
26-Oct-04	0:00	2522.00	Midnight Depth.Total pumping hrs for the past 24hrs: 17.1hrs.
	1:45	2550.00	TD 12.25 section. Circulate bottoms-up.
	4:00	2550.00	Start POOH.
	5:11	2274.00	Geolograph Off.
	14:30	19.00	Tools ART.
	14:43	0.00	Dumped CDR on rotary table.
	15:00	0.00	Tools racked back on the derrick.

Schlumberger — DRILLING & MEASUREMENTS - RUN SUMMARY

RUN INFORMATION

Job Number	Company Rep.	Date In	Date Out	D&M Run Number	Rig Run Number
AWA-04-07	B.Houston, J.Young	29-Oct-04	30-Oct-04	3	5

Company	SANTOS Ltd.	Grid Corr	Brief Run Summary	Bit Run Number	Cell Manager
Rig Name	Jack Bates	-0.29	Good Run	5	Achilles DeCastro
Well Name	Callister-1	Tot Corr	Hole Depth	D&M Crew	
Location	OTway Basin	10.56	From 2550 m / To 2662 m	Arnis Ahmad	
Mapfile	Mag Dec	PP Slot ID	Inclination (Drift)	Pumping Hours	Below Rotary Tbl Hrs
BGGM 2004	10.27		From 1.01 deg / To 1.09 deg	16.8 hrs.	43.0 hrs.

BPS	Frequency	Mod Type	Azimuth	Rotary Hours	Rotary Distance
3	12 Hz	QPSK	From 330.09 deg / To 335.82 deg	5.3 hrs.	112 m

Pump Type	Pump Output	Pump Strk Len.	True Vertical Depth	Slide Hours	Slide Distance
Triplex	4.2 gpm	12 in	From 2549.72 m / To 2661.71 m	0.0 hrs.	0.0 m

Pump Liner ID	Min DLS	Max DLS	Hole Size	Water Depth	Air Gap	Drilling Hours	Drilling Distance
6.0 in	0.03	0.07	8.5 in	129.42 m	29.0 m	5.3 hrs.	112 m

Bent Sub Angle	Bent HSG Ang	Depth Max DLS	RKB Height	Ground Elev.	Mod Gap	Reaming Hours	Reaming Distance
deg	deg	2616.28 m	29.0 m	-129.42 m	0.105 in	0.0 hrs.	0.0 m

Pulse Ht Thresh	Min Pulse Wdt	Max Pulse Wdt	Digit Time	T/F Arc	T/F Angle	On Bottom Hours	Service
				0 in	0 deg	5.3 hrs.	APWD & Dir. Surveys

Conn Phase Ang	Rise Const	Fall Const	H2S In Well	Damp Press	Signal Streng.	Last Casing	
deg			☐	800 psi	4.3	Size 9.625 in	Depth 2538.00 m

Directional Driller(s)	Turbine RPM @ Min Flow Rate	Turbine RPM @ Max Flow Rate
	RPM 1875 / FR 450 gpm	RPM 3505 / FR 700 gpm

Run Objective: To drill 8-1/2in section vertically to well TD.

EQUIPMENT DATA

Equipment Code	Pump Hrs Start	Pump Hrs Cum	SW Vers	Tool Size	Equipment Code	Pump Hrs Start	Pump Hrs Cum	SW Vers	Tool Size	Sensors Code	Real Time Hrs	Real Time Fail	Real Time Drilled	Recorded Time Hrs	Recorded Time Fail	Recorded Time Drilled
CDR6-AA-606	0	17	6.0B08	6.75						CDR6-AA-606	5.3		112	43		112
H524743-40042	0	17								MDC-AC-880	5.3		112	43		0
H524743-40043	0	17														
MDC-AC-880	0	17	7.0C00	6.75												

Surface Sys	IDEAL/SPM	IDEAL/SPM
Version	ID9_1C_01	HSPM9_2C_08

DH MOTOR

Manufacturer		Stage Length	m	Bit to Bend Dist.	m	Bearing Gap In	
Type		Rubber		RSS Mfr		Bearing Gap Out	
Size		Sleeve Position		RSS Type		Radial Bearing Play	
Serial Number		Sleeve Size	in	RSS Size		Thrust Bearing Play	
Lobe Config.		Motor Fail	☐	RSS SN			

OPERATING COND.

Max Circ Temp	61.00 C	Avg ROP	28.18 m/hr	Min Actl FlowRt	395.00 gpm	Max Shock Dur	2400.00 sec.
Min Circ Temp	59.00 C	Max ROP	68.85 m/hr	Avg PmpPres	2200.00 psi	Total DH Shocks (k)	10.50 k
End Mud Wt	9.09 lb/gal	Avg Surf RPM	128.00	PmpPres On Bot	2500.00 psi	CHECK SHOT	
End Funnel Vis	54.00 CPS	Min RPM	87.00	PmpPres Off Bot	2500.00 psi	Type	
End Plastic Vis	14.00 CPS	Max RPM	136.00	Avg Surf WOB	12.71 klbs	Depth	m
End Yield Point	24.00 CPS	Avg FlowRate	700.00 gpm	Avg Surf Torq	9.48 ft-lbs	Inclination	deg
End Mud Resist	0.12	Max Actl FlowRt	800.00 gpm	Max Shock Lev	3.00	Azimuth	deg

MUD

Company	MI Fluids	PH	9.00	Percent Sand	0.20 %	Additives	Barite
Brand	KCl/PHPA/Glyco	Chlorides	45000.00	Percent Solids	7.00 %	Clean	☑
Type	Fresh Water	Other		Percent Oil	0.00 %		
LCM Type				LCM Size		LCM Concentation	

BHA

BHA Type	Packed Hole	Tur Rotor Prt #		Turbine Config	400-800gpm	Surface Screen	☐
Int TF Offset	0.00	Stator Prt #		Pulser Config		DFS Used	☐
Low Oil Flag	☐	Hrs @ Low Oil	hrs.	Stab Spacing		Formation	Sandstone
DD Objectives Achieved	☐	If not, why?					

BIT

Bit Type	PDC	Other					
Manufacturer	Model	IADC Code	No. of Jets	Size of Jets	Bit TFA	Total Revs	Stick/Slip
Reed-Hycalog	RSX272		5,2	14,10	0.91	39896.00	YES
Inner Row	Outer Row	Dull Char	Location	Brng/Seals	Gauge (1/16")	Other Char	Reason Pulled
3	1	BU	A	X	In	WT	PR

FAILURE

Trans Fail	☐	Jamming	☐	Client Inconv.	☐	Surface Noise	☐
Pres Incr @ Fail	☐	Jamming Time	0.00 hrs.	Lost Time	0.00 hrs.	Down Hole Noise	☐
D&M Trip	☐	Sync Hours	12.21 hrs.	Surface Vib	☐	Surface Sys Failure	☐

SUMMARY

Good Run. POOH to investigate BHA due to low ROP while drilling.

Schlumberger

DRILLING & MEASUREMENTS - BHA DATA

Job Number	AWA-04-07
Run Number	3
BHA Number	5

Item	Description	Vendor	Material	Serial Number	Fishing Neck OD	Fishing Neck Length	Stab OD	OD	ID	Bot Connection Size	Bot Connection Type	Top Connection Size	Top Connection Type	Len	Cum Len
		UNITS			in	m	in	in	in					m	m
1	PDC Bit	Reed-Hycalog	Steel	109886				8.50				4.50	Reg P	0.25	0.25
2	N.B Roller Reamer	Gearhart	Steel	XM 094	6.50	0.66	8.50			4.50	Reg B	4.00	IF B	1.83	2.08
3	CDR6	Schlumberger	Monel	606	6.81	4.00		6.75	5.13	4.00	IF P	5.50	FH B	6.99	9.07
4	PowerPulse6 cw ILS6	Schlumberger	Monel	V880	7.00	0.47	8.38	6.75	4.13	5.50	FH P	4.00	IF B	9.11	18.18
5	Roller Reamer	Gearhart	Steel	XM 088	6.50	0.65	8.50	6.50	2.25	4.00	IF P	4.00	IF B	1.94	20.12
6	14 x 8" HWDC	TSF	Steel		6.50	1.08		6.50	2.88	4.00	IF P	4.00	IF B	127.17	147.29
7	8" Jar		Steel	DAH 03584	6.44	0.54		8.00	2.69	4.00	IF P	4.00	IF B	9.37	156.66
8	3 x 8" HWDC	TSF	Steel		6.50	1.08		6.50	2.88	4.00	IF P	4.00	IF B	27.23	183.89
9	Crossover	TSF	Steel	X/O 12	8.00	0.81		8.00	2.88	4.00	IF P	4.00	IF B	0.81	184.70
10	12 x 5" HWDP	TSF	Steel		6.50	0.60		6.50	3.00	4.00	IF P	4.00	IF B	110.77	295.47
11															
12															
13															
14															
15															
16															
17															
18															
19															
20															
21															
22															
23															
24															

TIME/DEPTH DETAILS	1	2	3	4	5
Date/Time	30-Oct-04				
Field Engineer	AMCastro				
Depth	2596.38				
Average ROP	18.58				
Avg. Std. Pres.	2800.79				
Desurger 1	800.00				
Desurger 2	800.00				
Tur. RPM @ FR	3554.70				
FR @ Tur. RPM	770.00				
Avg. RPM	100.00				
Max RPM	123.00				
Total Shocks	0.00				
Max Shock	0.00				
Avg. Surf. WOB	17.50				
Max Surf. WOB	22.00				
Avg. DH WOB	19.87				
Max DH WOB	20.95				
Avg. Surf. Torq.	3.00				
Max Surf. Torq.	5.00				
Avg. DH Torq.	4.68				
Max DH Torq.	5.21				
Formation Type	Shale				
Friction					
Drag Up					
Drag Down					
Mud Weight	9.10				
Funnel Vis.	54.00				
Plastic Vis.	14.00				
Circ. Temp	59.00				
Signal Strength	7.22				
Bit Deviation	0.98				
Differential Pres.					

PREDICTED BHA TENDENCY

BHA is to drill vetically to well TD.

Hookload	110.00	lbs	Wt. Below Jars	40.00	klbs
Pickup Wt.			Wt. Above Jars	20.00	klbs
Slack Wt.			Total Air Wt.	80.00	klbs

Stabilizer Description	Mid Pt To Bit	BLADE Type	BLADE Length	BLADE Width	GAUGE Length	GAUGE In	GAUGE Out
UNITS	m		in	in	in	in	in

Bit To Read Out Port			Bit To Measurement Port		
CDR	4.96	m	GR LWD	7.32	m
PPL	11.47	m	RES LWD	3.97	m
		m	APWD LWD	4.50	m
		m	D&I PPL	13.82	m
		m			m
		m			m
		m			m

BATTERY Tool	Unloaded (V) Before	Unloaded (V) After	Loaded (V) Before	Loaded (V) After	Run Hrs BOT	Run Hrs AMP	Cum Hrs BOT	Cum Hrs AMP
	21.73		20.59					
	21.73		20.76					

Schlumberger

DRILLING & MEASUREMENTS - TIME/DEPTH COMMENTS

Job Number:	AWA-04-07
Run Number:	3

Date	Time	Depth	Operating Details
29-Oct-04	6:50	0.00	Initialized CDR6-606 on the pipe deck with 10-sec record rate configuration. Tool was monitored for
			10 minutes. All systems checks passed.
	9:45	0.00	Start making up BHA.
	11:30	0.00	Tools BRT.
	15:18	170.00	Good SHT @ 1st stand of HWDP, pumping @ 450gpm, TRPM: 1875 rpm, SPT1: 6.7 psi, SPPA: 580 psi.
	15:30	170.00	Finished SHT. Continue RIH.
	20:30	2445.58	Geolograph On.
	20:40	2450.00	Tagged Top of cement.Tools on. SPT1: 3 psi, 470gpm, TRPM: 2200psi.
30-Oct-04	0:00	2509.75	Midnight depth. Total pumping hrs for the last 24 hrs: 4.4hrs.
	2:50	2553.00	In position for LOT. Circulate bottoms-up.
	3:00	2553.00	Start LOT.
	4:50	2553.00	Finished LOT.
	6:30	2553.00	Pumps on. Start washing down to bottom.
	6:46	2550.16	Geolograph jumped off the reel. Picked up off-bottom. Re-set bit depth at tool joint.
	11:41	2631.32	SCR.
	11:44	2631.32	Finished SCR. Drilling ahead
	12:49	2654.64	Flow Check.
	16:45	2662.00	ROP was very low. Company decided to POOH to investigate BHA.
	17:33	2512.00	Flow Check and unhooked Geolograph wire.
	18:04	2512.00	Finished Flow Check. Continue POOH.
31-Oct-04	0:00	2662.00	Midnight Depth.
	1:45	0.00	Tools ART.
	1:55	0.00	Dumped CDR6-606 recorded memory on the rotary table. Finished in 20 mins.

Schlumberger — DRILLING & MEASUREMENTS - RUN SUMMARY

RUN INFORMATION

Job Number	Company Rep.	Date In	Date Out	D&M Run Number	Rig Run Number
AWA-04-07	B.Houston/P. King	31-Oct-04	5-Nov-04	4	6

Company	SANTOS Ltd.	Grid Corr	Brief Run Summary	Bit Run Number	Cell Manager
Rig Name	Jack Bates	-0.29	Good Run	6	Achilles DeCastro
Well Name	Callister-1	Tot Corr	Hole Depth	D&M Crew	
Location	OTway Basin	10.56	From 2662 m / To 3914 m	Arnis Ahmad	
Mapfile	Mag Dec	PP Slot ID	Inclination (Drift)	Pumping Hours	Below Rotary Tbl Hrs
BGGM 2004	10.27		From 1.09 deg / To 2.7 deg	93.7 hrs.	129.1 hrs.

BPS	Frequency	Mod Type	Azimuth	Rotary Hours	Rotary Distance
3	12 Hz	QPSK	From 335.82 deg / To 196.27 deg	60.1 hrs.	1252 m

Pump Type	Pump Output	Pump Strk Len.	True Vertical Depth	Slide Hours	Slide Distance
Triplex	4.2 gpm	12 in	From 2661.71 m / To 3913.7 m	0.0 hrs.	0.0 m

Pump Liner ID	Min DLS	Max DLS	Hole Size	Water Depth	Air Gap	Drilling Hours	Drilling Distance
6.0 in	0.02	0.22	8.5 in	129.42 m	29.0 m	60.1 hrs.	1252 m

Bent Sub Angle	Bent HSG Ang	Depth Max DLS	RKB Height	Ground Elev.	Mod Gap	Reaming Hours	Reaming Distance
deg	deg	3358.35 m	29.0 m	-129.42 m	0.105 in	0.0 hrs.	0.0 m

Pulse Ht Thresh	Min Pulse Wdt	Max Pulse Wdt	Digit Time	T/F Arc	T/F Angle	On Bottom Hours	Service
				0 in	0 deg	60.1 hrs.	APWD & Dir. Surveys

Conn Phase Ang	Rise Const	Fall Const	H2S In Well	Damp Press	Signal Streng.	Last Casing	
deg			☐	800 psi	2.3	Size 9.625 in	Depth 2538 m

Directional Driller(s)	Turbine RPM @ Min Flow Rate	Turbine RPM @ Max Flow Rate
	RPM 3476 / FR 700 gpm	RPM 3750 / FR 800 gpm

Run Objective: To drill 8.5in section from 2662m to well TD.

EQUIPMENT DATA

Equipment Code	Pump Hrs Start	Pump Hrs Cum	SW Vers	Tool Size	Equipment Code	Pump Hrs Start	Pump Hrs Cum	SW Vers	Tool Size	Sensors Code	Real Time Hrs	Real Time Fail	Real Time Drilled	Recorded Time Hrs	Recorded Time Fail	Recorded Time Drilled
CDR6-AA-606	17	111	6.0B08	6.75						CDR6-AA-606	93.7		1252	129.1		1252
H524743-40042	17	111								MDC-AC-880	60.1		1252	0		0
H524743-40043	17	111														
MDC-AC-880	17	111	7.0C00	6.75												

Surface Sys	IDEAL/SPM	IDEAL/SPM
Version	ID9_1C_01	HSPM9_2C_08

DH MOTOR

Manufacturer		Stage Length	m	Bit to Bend Dist.	m	Bearing Gap In	
Type		Rubber		RSS Mfr		Bearing Gap Out	
Size		Sleeve Position		RSS Type		Radial Bearing Play	
Serial Number		Sleeve Size	in	RSS Size		Thrust Bearing Play	
Lobe Config.		Motor Fail	☐	RSS SN			

OPERATING COND.

Max Circ Temp	104.00 C	Avg ROP	27.09 m/hr	Min Actl FlowRt	536.00 gpm	Max Shock Dur	36.00 sec.
Min Circ Temp	63.00 C	Max ROP	66.85 m/hr	Avg PmpPres	3707.00 psi	Total DH Shocks (k)	6.40 k
End Mud Wt	12.85 lb/gal	Avg Surf RPM	128.00	PmpPres On Bot	4050.00 psi	CHECK SHOT	
End Funnel Vis	55.00 CPS	Min RPM	51.00	PmpPres Off Bot	4050.00 psi	Type	
End Plastic Vis	23.00 CPS	Max RPM	137.00	Avg Surf WOB	14.10 klbs	Depth	m
End Yield Point	32.00 CPS	Avg FlowRate	655.00 gpm	Avg Surf Torq	12.50 ft-lbs	Inclination	deg
End Mud Resist	0.10	Max Actl FlowRt	718.00 gpm	Max Shock Lev	3.00	Azimuth	deg

MUD

Company	MI Fluids	PH	8.90	Percent Sand	0.30 %	Additives	Barite
Brand	KCl/PHPA/Glyco	Chlorides	51000.00	Percent Solids	20.50 %	Clean	☑
Type	Fresh Water	Other		Percent Oil	0.00 %		
LCM Type				LCM Size		LCM Concentation	

BHA

BHA Type	Packed Hole	Tur Rotor Prt #		Turbine Config	400-800gpm	Surface Screen	☐
Int TF Offset	0.00	Stator Prt #		Pulser Config		DFS Used	☐
Low Oil Flag	☐	Hrs @ Low Oil	0.00 hrs.	Stab Spacing		Formation	Shale
DD Objectives Achieved	☑	If not, why?					

BIT

Bit Type	PDC	Other					
Manufacturer	Model	IADC Code	No. of Jets	Size of Jets	Bit TFA	Total Revs	Stick/Slip
Reed-Hycalog	DSX104		5	15	0.86	458237.00	YES
Inner Row	Outer Row	Dull Char	Location	Brng/Seals	Gauge (1/16")	Other Char	Reason Pulled
2	2	CT	S	X	IN	NO	TD

FAILURE

Trans Fail	☐	Jamming	☐	Client Inconv.	☐	Surface Noise	☐
Pres Incr @ Fail	☐	Jamming Time	0.00 hrs.	Lost Time	0.00 hrs.	Down Hole Noise	☐
D&M Trip	☐	Sync Hours	65.90 hrs.	Surface Vib	☐	Surface Sys Failure	☐

SUMMARY

Good run. Callister-1 TD @ 3914m MD.

Schlumberger

DRILLING & MEASUREMENTS - BHA DATA

Job Number	AWA-04-07
Run Number	4
BHA Number	6

Item	Description	Vendor	Material	Serial Number	Fishing Neck OD	Fishing Neck Length	Stab OD	OD	ID	Bot Connection Size	Bot Connection Type	Top Connection Size	Top Connection Type	Len	Cum Len
		UNITS			in	m	in	in	in					m	m
1	PDC Bit	Reed-Hycalog	Steel	409737				8.50				4.50	Reg P	0.23	0.23
2	N.B Roller Reamer	Gearhart	Steel	XM 094	6.50	0.66	8.50			4.50	Reg B	4.00	IF B	1.83	2.06
3	CDR6	Schlumberger	Monel	606	6.81	4.00		6.75	5.13	4.00	IF P	5.50	FH B	6.99	9.05
4	PowerPulse6 cw ILS6	Schlumberger	Monel	V880	7.00	0.47	8.38	6.75	4.13	5.50	FH P	4.00	IF B	9.11	18.16
5	Roller Reamer	Gearhart	Steel	XM 088	6.50	0.65	8.50	6.50	2.25	4.00	IF P	4.00	IF B	1.94	20.10
6	14 x 8" HWDC	TSF	Steel		6.50	1.08		6.50	2.88	4.00	IF P	4.00	IF B	127.17	147.27
7	8" Jar		Steel	DAH 03584	6.44	0.54		8.00	2.69	4.00	IF P	4.00	IF B	9.37	156.64
8	3 x 8" HWDC	TSF	Steel		6.50	1.08		6.50	2.88	4.00	IF P	4.00	IF B	27.23	183.87
9	Crossover	TSF	Steel	X/O 12	8.00	0.81		8.00	2.88	4.00	IF P	4.00	IF B	0.81	184.68
10	12 x 5" HWDP	TSF	Steel		6.50	0.60		6.50	3.00	4.00	IF P	4.00	IF B	110.77	295.45
11															
12															
13															
14															
15															
16															
17															
18															
19															
20															
21															
22															
23															
24															

TIME/DEPTH DETAILS

	1	2	3	4	5
Date/Time	30-Oct-04	01-Nov-04	01-Nov-04	02-Nov-04	04-Nov-04
Field Engineer	AMCastro	AAhmad	AMCastro	AMCastro	Aahmad
Depth	2684.87	3002.00	3115.92	3612.19	3832.00
Average ROP	36.85	40.00	29.52	12.95	12.00
Avg. Std. Pres.	2991.30	3260.00	4005.30	3867.02	4150.00
Desurger 1	800.00	800.00	800.00	800.00	800.00
Desurger 2	800.00	800.00	800.00	800.00	800.00
Tur. RPM @ FR	3750.00	3671.00	3632.70	3281.25	3125.00
FR @ Tur. RPM	800.00	750.00	770.00	730.00	620.00
Avg. RPM	135.00	136.00	132.00	87.00	135.00
Max RPM	140.00	140.00	140.00	125.00	140.00
Total Shocks	0.11	0.11	0.13	0.15	0.16
Max Shock	0.00	0.00	0.00	3.00	3.00
Avg. Surf. WOB	9.50	10.00	18.80	8.67	10.00
Max Surf. WOB	11.00	15.00	21.20	11.20	18.00
Avg. DH WOB	6.75	7.00	15.19		
Max DH WOB	8.88	9.00	17.96		
Avg. Surf. Torq.	3.00	4.00	4.00	7.00	4.00
Max Surf. Torq.	6.40	6.00	7.00	9.00	6.00
Avg. DH Torq.	5.58	5.00	2.88	3.24	2.00
Max DH Torq.	5.30	6.00	4.20	5.91	6.00
Formation Type	Shale	Shale	Shale	Sandstone	Shale
Friction					
Drag Up					
Drag Down					
Mud Weight	9.43	10.10	10.10	12.00	12.80
Funnel Vis.	55.00	50.00	50.00	50.00	55.00
Plastic Vis.	13.00	17.00	17.00	17.00	23.00
Circ. Temp	63.00	74.00	80.00	95.00	102.00
Signal Strength	5.25	5.50	5.80	3.03	2.10
Bit Deviation	1.09	0.37	0.47	2.18	2.50
Differential Pres.	0.00	0.00	0.00	0.00	0.00

PREDICTED BHA TENDENCY

Drill 8.5in section vertically to TD.

Hookload	110.00	Wt. Below Jars	40.00
Pickup Wt.		Wt. Above Jars	20.00
Slack Wt.		Total Air Wt.	80.00

Stabilizer Description	Mid Pt To Bit	BLADE Type	BLADE Length	BLADE Width	GAUGE Length	GAUGE In	GAUGE Out
UNITS	m		in	in	in	in	in

Bit To Read Out Port			Bit To Measurement Port		
CDR	4.94	m	GR LWD	7.30	m
PPL	11.45	m	RES LWD	3.95	m
		m	APWD LWD	4.48	m
		m	D&I PPL	13.80	m
		m			m
		m			m
		m			m

BATTERY	Unloaded (V)		Loaded (V)		Run Hrs		Cum Hrs	
Tool	Before	After	Before	After	BOT	AMP	BOT	AMP
H524743-40042	21.73		20.59		35.40	4.25	51.00	8.56
H524743-40043	21.73		20.59		0.00	0.00	51.00	0.00

Schlumberger

DRILLING & MEASUREMENTS - TIME/DEPTH COMMENTS

PAGE 1

Job Number:	AWA-04-07
Run Number:	4

Date	Time	Depth	Operating Details
31-Oct-04	2:45	0.00	Initialised CDR on rotary table with 10sec config. Monitored tool, and all system checks passed.
	4:40	170.00	SHT @ 700gpm, SPT1: 14psi, TRPM: 3476 rpm, SPPA: 1350 psi. Good result.
	4:45	170.00	Finished SHT. Continue RIH.
	10:15	2607.00	Geolograph connected. Set bit depth.
	11:00	2645.00	Start washing down to bottom.
	11:30	2662.00	On bottom, drilling ahead.
	22:50	2974.00	SCR's.
01-Nov-04	0:00	3002.00	Midnight depth. Pumping hrs for the past 24 hrs: 11.9 hrs.
	0:15	3002.00	Circulating to weight up mud to 10.5 ppg.
	0:30	3002.00	Re-calibrate DTORQ & DWOB.
	0:38	3002.00	Fi nished re-calibrate DTOR & DWOB.
	2:28	3002.00	Mud weight up to 10.5 ppg. Back on-bottom drilling.
	5:57	3052.00	Decrease in Pump Pressure. Picked up off-bottom. Flow check and checking the pumps.
	6:20	3052.00	Pumps online. Still investigating the problem on the pressure loss.
	6:38	3952.00	Back on-bottom drilling.
	7:21	3064.00	Drop in SPPA. Flow check to investigate the problem.
	7:38	3064.00	Back on-bottom drilling.
	8:48	3121.07	Pump #2 went down. Pull up off bottom.
	9:00	3121.07	Continue drilling with pump #1.
	11:24	3145.32	Pump #2 went online. Drilling ahead.
02-Nov-04	0:00	3400.00	Midnight depth. Pumping hrs for the past 24 hrs: 22 hrs.
	2:30	3444.00	Pumps offline. Pulled off-bottom. Flow check
	2:46	3444.00	Pumps back online.
	2:50	3444.00	Back on-bottom drilling.
	3:12	3450.00	Shock lvl 3, informed Comp. Man.
	3:21	3452.72	Problems with the pumps. Pick-up off-bottom to investigate.
	3:29	3452.72	Back on-bottom drilling.
	5:55	3487.28	Flow check.
	7:05	3515.95	Flow check. Trip tank was monitored due to a slight increase in trip volume.
	7:27	3515.95	Finish flow check. Trip volume stabilized.
	9:24	3526.92	Connection gas recorded up to 2750 units. Pick up off bottom to weigh up the mud to 12.0ppg.
	10:15	3526.92	Drilling mud was weigh up to 12.0ppg. Drilling ahead.
	10:40	3544.43	Flow check.
	12:51	3557.15	Connection gas peaked to 560 units. Drilling ahead.
	18:34	3630.03	Circulate bottoms up.
	19:40	3630.00	Pulled back 5 stands, and make up 6 stands of drillpipe to drill deeper.
	22:30	3630.00	Gas level up to 1200 units. Continue circulating.
03-Nov-04	0:00	3630.00	Midnight depth. Pumping hrs for the past 24 hrs: 19.2 hrs.
	2:50	3605.40	Set bit depth with driller. IDEAL time is 1:50am.
	2:57	3630.00	Tagged bottom drilling ahead.
	3:23	3634.00	Increased in gas to 5000 units. Picked off-bottom, circulating. MWD signal was affected.
	3:55	3634.00	Back on bottom drilling.
	9:25	3696.69	Shocks encountered. Intermittent real-time communication experienced between the tools. Picked up
			off bottom and worked the drillstring.
	11:52	3723.52	Shocks disappeared. Drilling ahead.
	14:58	3744.19	Mud weighed up to 12.6ppg. Circulating bottoms up.
	21:25	3802.11	SCR's.
04-Nov-04	0:00	3833.00	Midnight depth. Pumping hrs for the past 24 hrs: 20.1 hrs.
	0:03	3834.00	High Vib Torq observed. Picked up off-bottom and increased rpm.
	8:36	3914.00	Mud weighed up to 13.2ppg.
	9:00	3914.00	Well TD. Circulate bottoms up.
	20:00	3914.00	Started to POOH.
	20:30	3914.00	Geolograph wire disconnected.
	21:50	3910.00	RIH. Geolograph wire connected.
	22:00	3910.00	Set bitdepth to get ECD monitoring. IDEAL time was 21:00.

Schlumberger

DRILLING & MEASUREMENTS - TIME/DEPTH COMMENTS
PAGE 2

Job Number:	AWA-04-07
Run Number:	4

Date	Time	Depth	Operating Details
05-Nov-04	0:00	3914.00	Midnight depth. Pumping hrs for the past 24 hrs: 16.3 hrs.
	2:00	3914.00	Geolograph off. Start POOH.
	10:30	0.00	Tools above RT.
	11:13	0.00	Dumped CDR on pipedeck.

Schlumberger

IDEAL

Performance Drilling Report

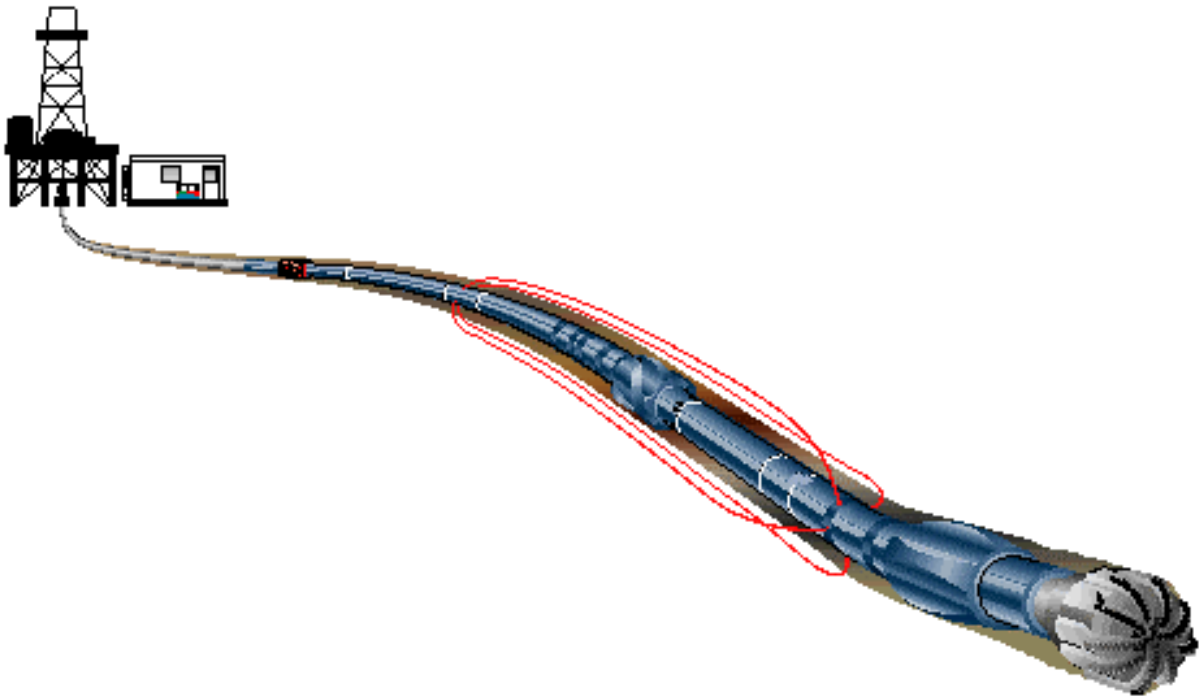

Schlumberger Santos

SANTOS Limited

End of Well Summary
Callister-1

13 October 2004 – 29 October 2004

Overview:

Callister-1 was planned as an Otway Basin vertical wildcat exploration well in the Vic/P51 licence. The Callister Prospect lies within Paaratte Sandstone and Waarre Formation. The well was drilled to intersect two targets. The first, primary target was the Intra-Paaratte Formation K91 Sandstone and the second was gas in the Waarre Formation. Generally Callister-1 is being considered as a gas target but there is a low probability that oil will be encountered in the reservoir as well. The purpose of the well is to establish whether reservoir potential exists within the Waarre Formation at depths below 3200mSS and to confirm the cross-fault seal potential within the Paaratte Formation sandstone intervals. During the drilling of the 17 ½" hole section, the well showed a slight build tendency thus drifting away from the center for 9m.

Note: Schlumberger did not have any involvement with BHA's 1&2.

BHA # 1
36"x 26" Packed Rotary Assembly w/Hole Opener
(129m MD - 192m MD)

A 26" Mill Tooth Bit in front of 36" Hole Opener was used to drill surface Hole Section to 192m MD, with Anderdrift MWD surveys taken approximately every 30m. The combination of 30" x 20" casing was RIH and the shoe set down at 191.29m MD.

BHA # 2
17 ½" Packed Rotary Assembly
(192m MD – 787.5m MD)

Drilling then continued ahead, by drilling out cement, casing shoe, and undifferentiated carbonates with seawater, utilising sweeps when needed. Anderdrift surveys were taken every +/-30m MD. At section TD the hole was circulated clean and seawater displaced to prehydrated bentonite mud. The 13 3/8" casing was run to the wellhead with drill pipe, 18 ¾" wellhead was landed in the 30" housing and latching confirmed with 50 kips overfull, and then the casing was cemented.

BHA # 3
12 1/4" Performance Motor Assembly
(787.5m MD – 989m MD)

12 1/4" PDC Bit- DSX194HGUW, A962M 7:8 GT PowerPak w/0° ABH, Float Sub, 12 1/4" Roller Reamer, CDR9, PowerPulse9, 12 ¼" Roller Reamer, 9 ½" NMDC, X/O, 7 x 8"DC, 8" Jar, 3 x 8" DC, 8" Accelerator, 8" DC, 12 x 5" HWDP, 5" DP to surface.

Tag and drilled out cement and float equipment. Drilled out shoe @ 787m MD and 3m of new formation and performed LOT. Continue to drill ahead with ROP from 30 – 50 m/hr, and

then at 851m first lateral shocks and torsional vibrations were encountered. The shocks measured by CDR were showing level 3 shocks. A variety of different parameters were applied to diminish and eliminate shocks, and finally with WOB 25 klbs, RPM 65 and flow rate of 1030 gpm the shock level was brought to a normal level, but than the ROP started to drop first gradually and later on after only 8 on bottom bit drilling hours the rate of penetration decreased to only 0.5 m/hr. Decision was made to POOH and check the bit condition. At the surface the bit was found severely damaged with all of cutters broken or lost, with serious signs of erosion and with ring out. The bit grading was: 8 8 RO A X 1 ER PR. This well is drifting in the northwest direction with BHA# 3 holding inclination around 1 degree. At the end of the run total vertical displacement was 11.5 m northwest of planned well trajectory.

BHA # 4
12 1/4" Performance Motor Assembly
(989m MD – 2550m MD)

12 1/4" PDC Bit- DSX104HGW, A962M 7:8 GT PowerPak w/0° ABH, Float Sub, 12 1/4" Roller Reamer, CDR9, PowerPulse9, 12 ¼" Roller Reamer, 9 ½" NMDC, X/O, 7 x 8"DC, 8" Jar, 3 x 8" DC, 8" Accelerator, 8" DC, 12 x 5" HWDP, 5" DP to surface.

After changing out the bit to DSX104HGW, this assembly was RIH. Once on bottom the hole was circulated clean and drilling commenced with low weight on bit, high RPM and high flow rate to avoid or push aside possible junk left from the previous bit. After a few meters initially drilled, the weight on bit was gradually increased to 15 klbs, RPM adjusted to 100 and flow rate slightly decreased to 900 gpm. With these parameters drilling was continued, carefully monitoring drilling mechanics and adjusting drilling parameters accordingly. The 9 5/8" casing shoe depth at 2550m MD was reached with no shocks recorded, and with an average rate of penetration of 26 m/h. The well was bottoms up circulated and BHA POOH to conduct wireline logs and run 9 5/8" Casing.

BHA # 5
8 1/2" Rotary Packed Assembly
(2550m MD – 2662m MD)

8 1/2" PDC Bit- RSX272, 8 1/2" Roller Reamer with float, CDR6, PowerPulse6 with ILS 8 3/8", 8 1/2" Roller Reamer, 14 x 6 1/2"DC, Jar, 3 x 6 1/2" DC, X/O, 12 x 5" HWDP, 5" DP to surface.

This BHA was intended to drill to TD but because of low ROP after 5.3 drilling hours decision was made to POOH end change the bit.

BHA # 6
8 1/2" Rotary Packed Assembly
(2262m MD – 3500m MD)

8 1/2" PDC Bit- RSX272, 8 1/2" Roller Reamer with float, CDR6, PowerPulse6 with ILS 8 3/8", 8 1/2" Roller Reamer, 14 x 6 1/2"DC, Jar, 3 x 6 1/2" DC, X/O, 12 x 5" HWDP, 5" DP to surface.

After changing out the bit to DSX104HGW, this assembly was RIH and drill to TD. The well was bottoms up circulated and wireline logs conducted.

BHA Data Sheet

Santos - Callister-1

BHA #	12 1/4" BHA#3 Callister-1	**Date**	October 26, 2004
Field	Callister	**Well**	Callister-1
Structure	Callister-1	**Borehole**	Callister-1

Item	Name	Vendor/ Model	Serial #	Fish. Neck OD (in)/ Length (m)	OD (in)/ ID (in)	Max OD (in)	Bottom/ Top Connection	Length (m)	Cum. Length (m)
1	12 1/4 " Bit	Hycalog	207742		8.00	12.25		0.29	0.29
		DSX194HGUW			3.25		6.63 Reg Pin		
2	Crossover	Schlumberger	L9000		9.50	9.50	6.63 Reg Box	0.35	0.64
					3.00		7.63 Reg Pin		
3	A962M7848GT	Schlumberger	2099		9.63	12.25	7.63 Reg Box	9.68	10.32
		A962M7848GT			7.85		7.63 Reg Box		
4	Float Sub	Schlumberger	3287		9.50	9.50	7.63 Reg Pin	0.90	11.22
					3.00		7.63 Reg Box		
5	12 1/4" Roller Reamer	Smith International		9.75	9.50	12.25	7.63 Reg Pin	2.52	13.74
				0.94	3.00		7.63 Reg Box		
6	CDR	Schlumberger	9546		9.50	9.50	7.63 Reg Pin	7.20	20.94
		CDR			4.85		7.63 H90 Box		
7	PowerPulse NF w/IWOB	Schlumberger			9.50	9.68	7.63 H90 Pin	8.46	29.40
		PowerPulse NF w/IWOB			5.90		7.63 Reg Box		
8	12 1/4" Roller Reamer	Smith International		9.75	9.50	12.25	7.63 Reg Pin	2.52	31.92
				0.94	3.00		7.63 Reg Box		
9	9 1/2" Collar	Schlumberger	D173	9.50	9.50	9.50	7.63 Reg Pin	9.20	41.12
				9.20	3.00		7.63 Reg Box		
10	Crossover		x/o 2		9.50	9.50	7.63 Reg Pin	1.32	42.44
					3.00		6.63 Reg Box		
11	8x8" Collar (8 joints)				8.00	8.00	6.63 Reg Pin	74.15	116.59
					3.00		6.63 Reg Box		
12	Hydraulic Jar	Dailey Petroleum S	48907 C		8.00	8.16	6.63 Reg Pin	9.78	126.37
		HDL-100			3.00		6.63 Reg Box		
13	2x8" Collar (2 joints)				8.00	8.00	6.63 Reg Pin	18.49	144.86
					3.00		6.63 Reg Box		
14	Accelerator	Dailey Petroleum S			7.75	7.75	6.63 Reg Pin	10.90	155.76
		HyPulse			3.00		6.63 Reg Box		
15	8" Collar				8.00	8.00	6.63 Reg Pin	9.17	164.93
					3.00		6.63 Reg Box		
16	Crossover		Dc001		8.00	8.00	6.63 Reg Pin	1.14	166.07
					3.00		4.50 NC50 (4 1/2		
17	12x5" HWDP (11 joints)				5.00	6.50	4.50 NC50 (4 1/2	110.77	276.84
					3.00		4.50 NC50 (4 1/2		
18	5" 19.50 DPS, 10% Wear				4.93	6.63	4.50 NC50 (4 1/2	10.00	286.84
	5,19.5,10% Wear				4.28		5.00 NC50 (4 1/2		
					Total Weight (kgf)		46595	**Total Len.**	286.84
					Below Jar (kgf)		33988.6		

BHA Comments:	

Stabilizer	
Blade Length (m)	**Mid-Pt. To Bit (m)**
0.46	1.36
0.60	11.97
0.60	30.15
	Bend To Bottom
Bent Housing Angle (deg)	**Connection (m)**

Sensor	
Type	**Distance To Bit (m)**
Resistivity	15.32
Gamma Ray	18.79
D&I	24.55

Bit Nozzles	
Count	**Size(mm)**
9	11.00
TFA (mm2)	538.87

Quality Control	
Created By:	BManjenic
Checked By:	

BHA Data Sheet

Santos - Callister-1

BHA #	12 1/4" BHA#4 Callister-1	**Date**	October 26, 2004
Field	Callister	**Well**	Callister-1
Structure	Callister-1	**Borehole**	Callister-1

Item	Name	Vendor/ Model	Serial #	Fish. Neck OD (in)/ Length (m)	OD (in)/ ID (in)	Max OD (in)	Bottom/ Top Connection	Length (m)	Cum. Length (m)
1	12 1/4 " Bit	Hycalog	10893		8.00	12.25		0.32	0.32
		DSX104HGW			3.25		6.63 Reg Pin		
2	Crossover	Schlumberger	L9000		9.50	9.50	6.63 Reg Box	0.35	0.67
					3.00		7.63 Reg Pin		
3	A962M7848GT	Schlumberger	2099		9.63	12.25	7.63 Reg Box	9.68	10.35
		A962M7848GT			7.85		7.63 Reg Box		
4	Float Sub	Schlumberger	3287		9.50	9.50	7.63 Reg Pin	0.90	11.25
					3.00		7.63 Reg Box		
5	12 1/4" Roller Reamer	Smith International		9.75	9.50	12.25	7.63 Reg Pin	2.52	13.77
				0.94	3.00		7.63 Reg Box		
6	CDR	Schlumberger	9546		9.50	9.50	7.63 Reg Pin	7.20	20.97
		CDR			4.85		7.63 H90 Box		
7	PowerPulse NF w/IWOB	Schlumberger			9.50	9.68	7.63 H90 Pin	8.46	29.43
		PowerPulse NF w/IWOB			5.90		7.63 Reg Box		
8	12 1/4" Roller Reamer	Smith International		9.75	9.50	12.25	7.63 Reg Pin	2.52	31.95
				0.94	3.00		7.63 Reg Box		
9	9 1/2" Collar	Schlumberger	D173	9.50	9.50	9.50	7.63 Reg Pin	9.20	41.15
				9.20	3.00		7.63 Reg Box		
10	Crossover		x/o 2		9.50	9.50	7.63 Reg Pin	1.32	42.47
					3.00		6.63 Reg Box		
11	8x8" Collar (8 joints)				8.00	8.00	6.63 Reg Pin	74.15	116.62
					3.00		6.63 Reg Box		
12	Hydraulic Jar	Dailey Petroleum S	48907 C		8.00	8.16	6.63 Reg Pin	9.78	126.40
		HDL-100			3.00		6.63 Reg Box		
13	2x8" Collar (2 joints)				8.00	8.00	6.63 Reg Pin	18.49	144.89
					3.00		6.63 Reg Box		
14	Accelerator	Dailey Petroleum S			7.75	7.75	6.63 Reg Pin	10.90	155.79
		HyPulse			3.00		6.63 Reg Box		
15	8" Collar				8.00	8.00	6.63 Reg Pin	9.17	164.96
					3.00		6.63 Reg Box		
16	Crossover		Dc001		8.00	8.00	6.63 Reg Pin	1.14	166.10
					3.00		4.50 NC50 (4 1/2		
17	12x5" HWDP (11 joints)				5.00	6.50	4.50 NC50 (4 1/2	110.77	276.87
					3.00		4.50 NC50 (4 1/2		
18	5" 19.50 DPS, 10% Wear				4.93	6.63	4.50 NC50 (4 1/2	10.00	286.87
	5,19.5,10% Wear				4.28		5.00 NC50 (4 1/2		
					Total Weight (kgf)		46595	**Total Len.**	286.87
					Below Jar (kgf)		33988.6		

BHA Comments:

Stabilizer	
Blade Length (m)	**Mid-Pt. To Bit (m)**
0.60	12.00
0.60	30.18
	Bend To Bottom
Bent Housing Angle (deg)	**Connection (m)**

Sensor	
Type	**Distance To Bit (m)**

Bit Nozzles	
Count	**Size(mm)**
5	14.00
TFA (mm2)	484.93

Quality Control	
Created By:	BManjenic
Checked By:	

Schlumberger

BOTTOM HOLE ASSEMBLY

COMPANY	WELL No	BHA #	TYPE	DATE
Santos	Callister-1	1	Rotary Assembly	13-Oct-04

Rock Bit Connections	4 1/2 Reg	6 5/8 Reg	7 5/8 Reg		DEPTH IN	129
Torque Klbs:	12K-16K	28 K-32 K	34 K-40 K		DEPTH OUT	192
PDC Bit Connections	3 1/2 Reg	4 1/2 Reg	6 5/8 Reg	7 5/8 Reg		
Torque Klbs:	7K	12K-17.7K	37 K-38.5 K	48.3 K-60.9 K		
Tool Jt Conn	3 1/2" IF	4 1/2 Reg	4 IF	4 1/2 IF	6 5/8 Reg	7 5/8 Reg
Torque Klbs:	9.9K	18K-23K	22 K-28 K	30 K-35 K	47K-53K	70K
Stab Slve Conn	Series 62	Series 65	Series 77	Series 85	Series 96	Series 47
Torque Klbs:	4.5K-5.5K	3.5K-4.5K	7K-8K	9K-10K	10K-12K	4K
Bent Housing	A475	A675	A800	A962		
Torque Klbs:	10 K	25 K	35 K	60 K		
Motor Sleeves						
Torque Klbs:	4K	10K	23K	37 K		

Description	O D	I D	Element Length	Total Length	Serial N°'s	Fish'g Neck	Connections Down	Connections Up	REMARKS
Mill Tooth Bit	26"	-	0.65	0.65	2x22, 1x20			7 5/8 RG-P	
9 1/2" Pony DC	9 7/16"	3"	3.58	4.23	502 A 23	Slick	7 5/8 RG-B	7 5/8 RG-P	
36" Hole Opener	36"	2 7/8"	2.23	6.46	46367, 3x22,1x20	Slick	7 5/8 RG-B	7 5/8 RG-P	
Float Sub	9 1/2"	3"	1.50	7.96	-	Slick	7 5/8 RG-B	7 5/8 RG-P	
9 1/2"Anderdrift	9 1/2"	3"	2.27	10.23	ADG 993	Slick	7 5/8 RG-B	7 5/8 RG-P	
X/O	9 1/2"	3"	0.55	10.78	ASF 8159	0.73	7 5/8 RG-B	7 5/8 RG-P	w/Totco Ring
17 1/2" String Stabilizer	17 1/2"	3"	2.02	12.80	207 A34	0.73	7 5/8 RG-B	7 5/8 RG-P	
9 1/2" Drill Collar	9 1/2"	3"	9.05	21.85	085 DC 96	0.50	7 5/8 RG-B	7 5/8 RG-P	
17 1/2" String Stabilizer	17 1/2"	3"	2.03	23.88	207 A 97	0.75	7 5/8 RG-B	7 5/8 RG-P	
2 x 9 1/2" Drill Collar	9 1/2"	3"	17.87	41.75	-	Slick	7 5/8 RG-B	7 5/8 RG-P	
X/O	9 1/2"	3"	1.32	43.07	-	Slick	6 5/8 RG-B	7 5/8 RG-P	
5 x 8" DC	8"	2 7/8"	47.02	90.09	-	Slick	6 5/8" RG-B	6 5/8" RG-P	
X/O	8"	3"	1.14	91.23	x/o 9	Slick	4 1/2" IF- B	6 5/8" RG-P	
12 x 5" HWDP	6 5/8"	3"	110.77	202.00	-	Slick	4 1/2" IF- B	4 1/2" IF- P	
5" DP to Surface	8"	3"			-		4 1/2" IF- B	4 1/2" IF- P	

	In Air								
Wt Below Jar	47,282	**BIT**			**Downhole Motor**		**Instructions**		
Wt Above Jar	12,963	**BIT N°**	1		**Motor Run**	N/A	**SPM**	**Flow GPM**	**Gals/Stroke**
TOTAL BHA Wt	60,245	**Size**	26"	**36"**	**Make**		110	414	3.76
String Wt	37,400	**Make**			**Size**		**Rev/Gal.**	**Motor RPM**	**Pressure @ TD**
Blks(T)op Drive	15,000	**Type**	Hole	Opener	**Type**		0	0	1250
Total Hk Load	112,645	**IADC**			**Stages**		**Surface RPM**	**Total RPM**	**WOB**
Date IN	13-Oct-04	**S/N**	46367		**R/S Config**		120	120	25k
Time IN		**Jets**	2.22		**Rotor Jet**				
Date OUT	15-Oct-04	**Jets**	1.20		**S/N**		26" x 36" Hole Opener assembly		
Time OUT		**Jets**	3.22	**1.20**	**Bent Hsg Degs**				
Total Hrs In Hole		**TFA**			**B/Hsg STAB**				
On Bottom Bit Hrs.		**F'tage**	63		**GST Deg Bend**	N/A			

Schlumberger

BOTTOM HOLE ASSEMBLY

COMPANY	WELL No	BHA #	TYPE	DATE
Santos	Callister-1	2	Rotary Packed Assembly	15-Oct-04

Rock Bit Connections	4 1/2 Reg	6 5/8 Reg	7 5/8 Reg		DEPTH IN	192
Torque Klbs:	12K-16K	28 K-32 K	34 K-40 K		DEPTH OUT	785
PDC Bit Connections	3 1/2 Reg	4 1/2 Reg	6 5/8 Reg	7 5/8 Reg		
Torque Klbs:	7K	12K-17.7K	37 K-38.5 K	48.3 K-60.9 K		
Tool Jt Conn	3 1/2" IF	4 1/2 Reg	4 IF	4 1/2 IF	6 5/8 Reg	7 5/8 Reg
Torque Klbs:	9.9K	18K-23K	22 K-28 K	30 K-35 K	47K-53K	70K
Stab Slve Conn	Series 62	Series 65	Series 77	Series 85	Series 96	Series 47
Torque Klbs:	4.5K-5.5K	3.5K-4.5K	7K-8K	9K-10K	10K-12K	4K
Bent Housing	A475	A675	A800	A962		
Torque Klbs:	10 K	25 K	35 K	60 K		
Motor Sleeves						
Torque Klbs:	4K	10K	23K	37 K		

Description	O D	I D	Element Length	Total Length	Serial N°'s	Fish'g Neck	Connections Down	Connections Up	REMARKS
Mill Tooth Bit	17 1/2"	-	0.48	0.48	A 98111			7 5/8 RG-P	
Bit Sub	9 1/2"	3"	1.50	1.98	BS-1	Slick	7 5/8 RG-B	7 5/8 RG-P	w/Float
Anderdrift	9 1/2"	3"	2.25	4.23	ADG 993	Slick	7 5/8 RG-B	7 5/8 RG-P	
X/O	9 1/2"	3"	0.56	4.79	ASF 8194	Slick	7 5/8 RG-B	7 5/8 RG-P	w/Totco Ring
9 1/2" Pony DC	9 7/16"	3"	3.58	8.37	502 A 23	Slick	7 5/8 RG-B	7 5/8 RG-P	
17 1/2" String Stabilizer	17 1/2"	3"	2.02	10.39	207 A34	0.73	7 5/8 RG-B	7 5/8 RG-P	
9 1/2" Drill Collar	9 1/2"	3"	9.05	19.44	085 DC 96	0.50	7 5/8 RG-B	7 5/8 RG-P	
17 1/2" String Stabilizer	17 1/2"	3"	2.03	21.47	207 A 97	0.75	7 5/8 RG-B	7 5/8 RG-P	
2 x 9 1/2" Drill Collar	9 1/2"	3"	17.87	39.34	-	Slick	7 5/8 RG-B	7 5/8 RG-P	
X/O	9 1/2"	3"	1.32	40.66	-	Slick	6 5/8 RG-B	7 5/8 RG-P	
12 x 8" DC	8"	2 7/8"	74.15	114.81	-	Slick	6 5/8" RG-B	6 5/8" RG-P	
8" Jar	8 1/16"	3"	9.78	124.59	48907-C	0.61	6 5/8" RG-B	6 5/8" RG-P	
2 x 8" Drill Collar	8"	2 7/8"	18.49	143.08	-	Slick	6 5/8" RG-B	6 5/8" RG-P	
8" Accelerator	8"	3"	10.90	153.98	DAH 01586	0.61	6 5/8" RG-B	6 5/8" RG-P	
8" Drill Collar	8"	2 7/8"	9.17	163.15	DC 001	Slick	6 5/8" RG-B	6 5/8" RG-P	
X/O	8"	3"	1.14	164.29	x/o 9	Slick	4 1/2" IF- B	6 5/8" RG-P	
12 x 5" HWDP	6 5/8"	3"	110.77	275.06	-	-	4 1/2" IF- B	4 1/2" IF- P	
5" DP to Surface	5"	3"					4 1/2" IF- B	4 1/2" IF- P	

	In Air								
Wt Below Jar	40,287	**BIT**			**Downhole Motor**		**Instructions**		
Wt Above Jar	14,955	**BIT N°**	2		**Motor Run**	N/A	**SPM**	**Flow GPM**	**Gals/Stroke**
TOTAL BHA Wt	55,242	**Size**	17 1/2"		**Make**		110	414	3.76
String Wt	73,156	**Make**	Reed		**Size**		**Rev/Gal.**	**Motor RPM**	**Pressure @ TD**
Blks(T)op Drive	15,000	**Type**	T111		**Type**		0	0	1350
Total Hk Load	143,398	**IADC**	115		**Stages**		**Surface RPM**	**Total RPM**	**WOB**
Date IN	15-Oct-04	**S/N**	A 98111		**R/S Config**		140	140	5-10Klbs
Time IN	10:00	**Jets**	3.22		**Rotor Jet**				
Date OUT	17-Oct-04	**Jets**	1.20		**S/N**		Packed rotary assembly		
Time OUT		**Jets**			**Bent Hsg Degs**				
Total Hrs In Hole		**TFA**	1.420		**B/Hsg STAB**				
On Bottom Bit Hrs.		**F'tage**	593		**GST Deg Bend**	N/A			

Schlumberger

BOTTOM HOLE ASSEMBLY

COMPANY	WELL No	BHA #	TYPE	DATE
Santos	Callister-1	3	Performance Drilling Assembly	20-Oct-04

Rock Bit Connections	4 1/2 Reg	6 5/8 Reg	7 5/8 Reg		DEPTH IN	787
Torque Klbs:	12K-16K	28 K-32 K	34 K-40 K		DEPTH OUT	989
PDC Bit Connections	3 1/2 Reg	4 1/2 Reg	6 5/8 Reg	7 5/8 Reg		
Torque Klbs:	7K	12K-17.7K	37 K-38.5 K	48.3 K-60.9 K		
Tool Jt Conn	3 1/2" IF	4 1/2 Reg	4 IF	4 1/2 IF	6 5/8 Reg	7 5/8 Reg
Torque Klbs:	9.9K	18K-23K	22 K-28 K	30 K-35 K	47K-53K	70K
Stab Slve Conn	Series 62	Series 65	Series 77	Series 85	Series 96	Series 47
Torque Klbs:	4.5K-5.5K	3.5K-4.5K	7K-8K	9K-10K	10K-12K	4K
Bent Housing	A475	A675	A800	A962		
Torque Klbs:	10 K	25 K	35 K	60 K		
Motor Sleeves						
Torque Klbs:	4K	10K	23K	37 K		

Description	O D	I D	Element Length	Total Length	Serial N°'s	Fish'g Neck	Connections Down	Connections Up	REMARKS
PDC Bit	12 1/4"	-	0.29	0.29	207742			6 5/8 RG-P	6Blades,16mmCut.
X/O	9 5/8"	3"	0.35	0.64	L9000	Slick	6 5/8 RG-B	7 5/8 RG-P	
A962MGT7848	9 5/8"	-	9.68	10.32	2099	Slick	7 5/8 RG-B	7 5/8 RG-P	
Float Sub	9 1/2"	3"	0.90	11.22	3287	Slick	7 5/8 RG-B	7 5/8 RG-P	
12 1/4" Roller Reamer	9 1/2"	3"	2.52	13.74	XM066	0.94	7 5/8 RG-B	7 5/8 RG-P	
CDR9	9 1/2"	5 7/8"	7.20	20.94	9546	0.73	7 5/8 RG-B	7 5/8 H90-P	
PowerPulse	9 1/2"	4 1/4"	8.46	29.40	W693	0.50	7 5/8 H90-B	7 5/8 RG-P	**w/totco**
12 1/4" Roller Reamer	17 1/2"	3"	2.52	31.92	XM065	0.94	7 5/8 RG-B	7 5/8 RG-P	
9 1/2" NM Drill Collar	9 1/2"	3"	9.20	41.12	D173	Slick	7 5/8 RG-B	7 5/8 RG-P	
X/O	9 1/2"	3"	1.32	42.44	rig	Slick	6 5/8 RG-B	7 5/8 RG-P	
8 x 8" DC	8"	2 7/8"	74.15	116.59	-	Slick	6 5/8" RG-B	6 5/8" RG-P	
8" Jar	8 1/16"	3"	9.78	126.37	48907-C	0.61	6 5/8" RG-B	6 5/8" RG-P	
2 x 8" Drill Collar	8"	2 7/8"	18.49	144.86	-	Slick	6 5/8" RG-B	6 5/8" RG-P	
8" Accelerator	8"	3"	10.90	155.76	DAH 01586	0.61	6 5/8" RG-B	6 5/8" RG-P	
8" Drill Collar	8"	2 7/8"	9.17	164.93	DC 001	Slick	6 5/8" RG-B	6 5/8" RG-P	
X/O	8"	3"	1.14	166.07	x/o 9	Slick	4 1/2" IF- B	6 5/8" RG-P	
12 x 5" HWDP	6 5/8"	3"	110.77	276.84	-	-	4 1/2" IF- B	4 1/2" IF- P	
5" DP to Surface	5"	3"					4 1/2" IF- B	4 1/2" IF- P	

In Air

Schlumberger

BOTTOM HOLE ASSEMBLY

COMPANY	WELL No	BHA #	TYPE	DATE
Santos	Callister-1	4	Performance Drilling Assembly	21-Oct-04

Rock Bit Connections	4 1/2 Reg	6 5/8 Reg	7 5/8 Reg		DEPTH IN	989
Torque Klbs:	12K-16K	28 K-32 K	34 K-40 K		DEPTH OUT	2550
PDC Bit Connections	3 1/2 Reg	4 1/2 Reg	6 5/8 Reg	7 5/8 Reg		
Torque Klbs:	7K	12K-17.7K	37 K-38.5 K	48.3 K-60.9 K		
Tool Jt Conn	3 1/2" IF	4 1/2 Reg	4 IF	4 1/2 IF	6 5/8 Reg	7 5/8 Reg
Torque Klbs:	9.9K	18K-23K	22 K-28 K	30 K-35 K	47K-53K	70K
Stab Slve Conn	Series 62	Series 65	Series 77	Series 85	Series 96	Series 47
Torque Klbs:	4.5K-5.5K	3.5K-4.5K	7K-8K	9K-10K	10K-12K	4K
Bent Housing	A475	A675	A800	A962		
Torque Klbs:	10 K	25 K	35 K	60 K		
Motor Sleeves						
Torque Klbs:	4K	10K	23K	37 K		

Description	O D	I D	Element Length	Total Length	Serial N°'s	Fish'g Neck	Connections Down	Connections Up	REMARKS
PDC Bit	12 1/4"	-	0.32	0.32	108903			6 5/8 RG-P	5Blades,19mmCut.
X/O	9 5/8"	3"	0.35	0.67	L9000	Slick	6 5/8 RG-B	7 5/8 RG-P	
A962MGT7848	9 5/8"	-	9.68	10.35	2099	Slick	7 5/8 RG-B	7 5/8 RG-P	
Float Sub	9 1/2"	3"	0.90	11.25	3287	Slick	7 5/8 RG-B	7 5/8 RG-P	
12 1/4" Roller Reamer	9 1/2"	3"	2.52	13.77		0.94	7 5/8 RG-B	7 5/8 RG-P	
CDR9	9 1/2"	5 7/8"	7.20	20.97	9546	0.73	7 5/8 RG-B	7 5/8 H90-P	
PowerPulse	9 1/2"	4 1/4"	8.46	29.43	W693	0.50	7 5/8 H90-B	7 5/8 RG-P	**w/totco**
12 1/4" Roller Reamer	17 1/2"	3"	2.52	31.95		0.94	7 5/8 RG-B	7 5/8 RG-P	
9 1/2" NM Drill Collar	9 1/2"	3"	9.20	41.15	D173	Slick	7 5/8 RG-B	7 5/8 RG-P	
X/O	9 1/2"	3"	1.32	42.47	rig	Slick	6 5/8 RG-B	7 5/8 RG-P	
8 x 8" DC	8"	2 7/8"	74.15	116.62	-	Slick	6 5/8" RG-B	6 5/8" RG-P	
8" Jar	8 1/16"	3"	9.78	126.40	48907-C	0.61	6 5/8" RG-B	6 5/8" RG-P	
2 x 8" Drill Collar	8"	2 7/8"	18.49	144.89	-	Slick	6 5/8" RG-B	6 5/8" RG-P	
8" Accelerator	8"	3"	10.90	155.79	DAH 01586	0.61	6 5/8" RG-B	6 5/8" RG-P	
8" Drill Collar	8"	2 7/8"	9.17	164.96	DC 001	Slick	6 5/8" RG-B	6 5/8" RG-P	
X/O	8"	3"	1.14	166.10	x/o 9	Slick	4 1/2" IF- B	6 5/8" RG-P	
12 x 5" HWDP	6 5/8"	3"	110.77	276.87	-	-	4 1/2" IF- B	4 1/2" IF- P	
5" DP to Surface	5"	3"					4 1/2" IF- B	4 1/2" IF- P	

In Air

Schlumberger

BOTTOM HOLE ASSEMBLY

COMPANY	WELL No	BHA #	TYPE	DATE
Santos	Callister-1	5	Rotary Packed Assembly	29-Oct-04

Rock Bit Connections	4 1/2 Reg	6 5/8 Reg	7 5/8 Reg		DEPTH IN	2550
Torque Klbs:	12K-16K	28 K-32 K	34 K-40 K		DEPTH OUT	2662
PDC Bit Connections	3 1/2 Reg	4 1/2 Reg	6 5/8 Reg	7 5/8 Reg		
Torque Klbs:	7K	12K-17.7K	37 K-38.5 K	48.3 K-60.9 K		
Tool Jt Conn	3 1/2" IF	4 1/2 Reg	4 IF	4 1/2 IF	6 5/8 Reg	7 5/8 Reg
Torque Klbs:	9.9K	18K-23K	22 K-28 K	30 K-35 K	47K-53K	70K
Stab Slve Conn	Series 62	Series 65	Series 77	Series 85	Series 96	Series 47
Torque Klbs:	4.5K-5.5K	3.5K-4.5K	7K-8K	9K-10K	10K-12K	4K
Bent Housing	A475	A675	A800	A962		
Torque Klbs:	10 K	25 K	35 K	60 K		
Motor Sleeves						
Torque Klbs:	4K	10K	23K	37 K		

Description	O D	I D	Element Length	Total Length	Serial N°'s	Fish'g Neck	Connections Down	Connections Up	REMARKS
PDC Bit	8 1/2"	-	0.23	0.23				4 1/2 RG-P	
8 1/2" NB Roller Reamer	8 1/2"	2 13/16"	1.83	2.06	Santos		4 1/2 RG-B	4" IF - B	w/float
CDR6	6 3/4"	5 1/8"	6.99	9.05	606	Slick	4" IF - P	5 1/2" FH - B	
PowerPulse6 w ILS 8 3/8"	8 3/8"	4 1/8"	9.11	18.16	V880	Slick	5 1/2"FH - P	4" IF - B	w/totco ring
8 1/2" Roller Reamer	8 1/2"	2 13/16"	1.94	20.10	Santos		4" IF - P	4" IF - B	
14 x 6 1/2" Drill Collar	6 1/2"	2 13/16"	127.17	147.27	Rig		4" IF - P	4" IF - B	
Jar	6 1/2"	2 7/8"	9.37	156.64			4" IF - P	4" IF - B	
3 x 6 1/2" Drill Collar	6 1/2"	2 13/16"	27.23	183.87			4" IF - P	4" IF - B	
X/O	6 1/2"	2 13/16"	0.81	184.68	Rig		4" IF - P	4 1/2" IF - B	
12 x 5" HWDP	6 5/8"	3"	110.77	295.45			4 1/2" IF - P	4 1/2" IF - B	
5" DP to Surface	5"	3"					4 1/2" IF - P	4 1/2" IF - B	

	In Air								
Wt Below Jar	40,287	**BIT**			**Downhole Motor**		**Instructions**		
Wt Above Jar	14,955	**BIT N°**	5		**Motor Run**	N/A	**SPM**	**Flow GPM**	**Gals/Stroke**
TOTAL BHA Wt	55,242	**Size**	8 1/2"		**Make**		150	642	4.28
String Wt	73,156	**Make**	Hycalog		**Size**		**Rev/Gal.**	**Motor RPM**	**Pressure @ TD**
Blks(T)op Drive	15,000	**Type**	RSX272		**Type**		0	0	4000
Total Hk Load	143,398	**IADC**			**Stages**		**Surface RPM**	**Total RPM**	**WOB**
Date IN	29-Oct-04	**S/N**			**R/S Config**		100	100	5-15Klbs
Time IN	11:30	**Jets**	5.14		**Rotor Jet**				
Date OUT	31-Oct-04	**Jets**	2.10		**S/N**		Rotary Packed Assembly		
Time OUT	1:45	**Jets**			**Bent Hsg Degs**				
Total Hrs In Hole	43.00	**TFA**	0.910		**B/Hsg STAB**				
On Bottom Bit Hrs.	5.30	**F'tage**	112		**GST Deg Bend**	N/A			

Schlumberger

BOTTOM HOLE ASSEMBLY

COMPANY	WELL No	BHA #	TYPE	DATE
Santos	Callister-1	6	Rotary Packed Assembly	31-Oct-04

Rock Bit Connections	4 1/2 Reg	6 5/8 Reg	7 5/8 Reg		DEPTH IN	2662
Torque Klbs:	12K-16K	28 K-32 K	34 K-40 K		DEPTH OUT	3500
PDC Bit Connections	3 1/2 Reg	4 1/2 Reg	6 5/8 Reg	7 5/8 Reg		
Torque Klbs:	7K	12K-17.7K	37 K-38.5 K	48.3 K-60.9 K		
Tool Jt Conn	3 1/2" IF	4 1/2 Reg	4 IF	4 1/2 IF	6 5/8 Reg	7 5/8 Reg
Torque Klbs:	9.9K	18K-23K	22 K-28 K	30 K-35 K	47K-53K	70K
Stab Slve Conn	Series 62	Series 65	Series 77	Series 85	Series 96	Series 47
Torque Klbs:	4.5K-5.5K	3.5K-4.5K	7K-8K	9K-10K	10K-12K	4K
Bent Housing	A475	A675	A800	A962		
Torque Klbs:	10 K	25 K	35 K	60 K		
Motor Sleeves						
Torque Klbs:	4K	10K	23K	37 K		

Description	O D	I D	Element Length	Total Length	Serial N°'s	Fish'g Neck	Connections Down	Connections Up	REMARKS
PDC Bit	8 1/2"	-	0.23	0.23				4 1/2 RG-P	
8 1/2" NB Roller Reamer	8 1/2"	2 13/16"	1.83	2.06	Santos		4 1/2 RG-B	4" IF - B	w/float
CDR6	6 3/4"	5 1/8"	6.99	9.05	606	Slick	4" IF - P	5 1/2" FH - B	
PowerPulse6 w ILS 8 3/8"	8 3/8"	4 1/8"	9.11	18.16	V880	Slick	5 1/2"FH - P	4" IF - B	w/totco ring
8 1/2" Roller Reamer	8 1/2"	2 13/16"	1.94	20.10	Santos		4" IF - P	4" IF - B	
14 x 6 1/2" Drill Collar	6 1/2"	2 13/16"	127.17	147.27	Rig		4" IF - P	4" IF - B	
Jar	6 1/2"	2 7/8"	9.37	156.64			4" IF - P	4" IF - B	
3 x 6 1/2" Drill Collar	6 1/2"	2 13/16"	27.23	183.87			4" IF - P	4" IF - B	
X/O	6 1/2"	2 13/16"	0.81	184.68	Rig		4" IF - P	4 1/2" IF - B	
12 x 5" HWDP	6 5/8"	3"	110.77	295.45			4 1/2" IF - P	4 1/2" IF - B	
5" DP to Surface	5"	3"					4 1/2" IF - P	4 1/2" IF - B	

	In Air								
Wt Below Jar	40,287	**BIT**			**Downhole Motor**		**Instructions**		
Wt Above Jar	14,955	**BIT N°**	6		**Motor Run**	N/A	**SPM**	**Flow GPM**	**Gals/Stroke**
TOTAL BHA Wt	55,242	**Size**	8 1/2"		**Make**		150	642	4.28
String Wt	73,156	**Make**	Hycalog		**Size**		**Rev/Gal.**	**Motor RPM**	**Pressure @ TD**
Blks(T)op Drive	15,000	**Type**	DSX104		**Type**		0	0	4000
Total Hk Load	143,398	**IADC**			**Stages**		**Surface RPM**	**Total RPM**	**WOB**
Date IN	31-Oct-04	**S/N**			**R/S Config**		130	130	5-15Klbs
Time IN		**Jets**	5.14		**Rotor Jet**				
Date OUT		**Jets**	2.10		**S/N**		Rotary Packed Assembly		
Time OUT		**Jets**			**Bent Hsg Degs**				
Total Hrs In Hole		**TFA**	0.910		**B/Hsg STAB**				
On Bottom Bit Hrs.		**F'tage**	838		**GST Deg Bend**	N/A			

WELL#	Callister-1	DATE:	20-Oct-04	Depth In :	787 MD	Pump Output	4.28 Gal / stk	Planned Angle :		Page 1 of 3
								Planned Direction :		

BHA # 3 **BIT#** 3 **BHA :** PDC Bit X/O A962MGT784 Float Sub er Reamer CDR9 **PowerPulse**

SURVEY SPACING = **25.07**

GAMMA SPACING = **19.16**

DLS & Depths are, 1=°/100Ft, 2=°/30Mts, 3=°/10Mts: **2**

30"x 20" Casing Shoe Set @ 192m MD

13 3/8" Casing Shoe Set @ 785m MD

	DRILLING TIME			Motor Work Sheet				AVG	SURVEY			STK /	FLOW			TORQ	PRESSURE		REMARKS
R / S	START	STOP	SUM	FROM	TO	Feet Rotated	Feet Slide	TF	DEPTH	INCL	AZM	MIN	RATE	RPM	WOB	kft-lbs	On Bottom	Off Bottom	
R	13:35	13:39	0:04	787	790	3						170	728	80	10-15	2	1,450	1,400	Tag cement @739(drill cement 6 hrs)
R	16:05	16:50	0:45	790	819	29						180	770	80	10-15	2	1,520	1,450	LOT
R	17:14	18:22	1:08	819	845	26						185	792	80	10-15	2	2,060	1,950	
R	18:45	21:27	2:42	845	874	29						210	899	110	10	2	2,060	1,790	
R	23:10	1:23	2:13	874	902	28						210	899	65	5-10	2	2,100	1,850	
R	1:51	4:22	2:31	902	930	28						210	899	65	5-10	2	2,250	2,050	
R	4:49	5:37	0:48	930	958	28						240	1,027	70	5-10	2	2,680	2,450	
R	5:56	6:50	0:54	958	987	29						240	1,027	70	5	2	2,680	2,450	
R	7:32	11:42	4:10	987	989	2						240	1,027	70	10-40	2	2,700	2,500	Flow check

TIME BREAKDOWN:

Rotated Time : **15:15** **Hrs/Mins** **Feet Rotated:** **202.0**

Slide Time : **Hrs/Mins** **Feet Slid:**

Total Time : **15:15** **Hrs/ Mins** **Feet Drilled :** **202.0**

WELL#	Callister-1	DATE:	21-Oct-04	Depth In :	787 MD	Pump Output	4.28 Gal / stk	Planned Angle :		Page 2 of 3
								Planned Direction :		

BHA # 4 **BIT#** 4 **BHA :** PDC Bit X/O A962MGT784 Float Sub er Reamer CDR9 **PowerPulse**

SURVEY SPACING = 25.07

GAMMA SPACING = 19.16

DLS & Depths are, 1=°/100Ft, 2=°/30Mts, 3=°/10Mts: 2

30"x 20" Casing Shoe Set @ 192m MD

13 3/8" Casing Shoe Set @ 785m MD

	DRILLING TIME			Motor Work Sheet				AVG	SURVEY			STK /	FLOW			TORQ	PRESSURE		REMARKS
R / S	START	STOP	SUM	FROM	TO	Feet Rotated	Feet Slide	TF	DEPTH	INCL	AZM	MIN	RATE	RPM	WOB	kft-lbs	On Bottom	Off Bottom	
R	5:00	5:30	0:30	989	997	8						240	1,027	80	2	2	2,100	2,000	wash down, condition mud
R	5:30	6:02	0:32	997	1018	21			1016.77	1.00	334.61	240	1,027	80	8	3	2,150	2,000	
R	6:22	7:24	1:02	1018	1047	29			1037.31	1.03	330.72	210	899	80	15	3-5	2,150	2,000	
R	7:45	8:32	0:47	1047	1076	29			1073.31	0.97	332.91	210	899	100	15	3	2,150	2,000	
R	8:50	9:24	0:34	1076	1105	29			1101.55	1.29	326.69	210	899	100	15	3	2,150	2,000	
R	10:18	11:00	0:42	1105	1132	27			1130.35	1.38	328.84	210	899	100	15	3	2,200	2,000	
R	11:29	12:03	0:34	1132	1161	29			1159.59	1.19	326.05	210	899	100	5	3	2,200	2,000	
R	12:25	13:00	0:35	1161	1190	29			1188.36	1.09	328.96	210	899	100	5	3	2,200	2,000	
R	13:39	14:15	0:36	1190	1219	29			1216.58	1.00	326.02	210	899	100	5	3	2,200	2,000	
R	14:48	15:22	0:34	1219	1248	29			1245.42	1.04	326.14	210	899	100	5	3	2,250	2,050	
R	15:48	16:22	0:34	1248	1277	29			1274.17	1.16	320.05	210	899	100	5	3	2,250	2,050	
R	16:47	17:55	1:08	1277	1306	29			1303.61	0.91	307.43	210	899	100	5	3	2,300	2,100	
R	18:17	19:48	1:31	1306	1335	29			1332.69	0.59	319.05	210	899	100	5	3	2,300	2,100	
R	20:20	21:28	1:08	1335	1362	27			1361.48	0.51	310.54	210	899	100	5	3	2,300	2,100	
R	21:45	22:52	1:07	1362	1391	29						210	899	100	5	3-5	2,300	2,100	
R	23:25	0:40	1:15	1391	1419	28			1417.46	0.62	318.06	210	899	100	5	3-5	2,300	2,100	
R	0:56	1:50	0:54	1419	1448	29			1447.76	0.51	316.13	210	899	100	5	3-5	2,300	2,100	
R	2:09	3:13	1:04	1448	1477	29			1476.30	0.56	320.25	210	899	100	5	3-5	2,300	2,100	
R	3:33	5:06	1:33	1477	1505	28			1503.90	0.49	302.77	210	899	100	5	5-8	2,300	2,100	
R	5:32	6:44	1:12	1505	1533	28			1532.52	0.49	296.48	210	899	100	5	5-8	2,300	2,100	
R	7:03	8:02	0:59	1533	1562	29			1560.05	0.41	312.01	210	899	100	5	5-8	2,300	2,100	
R	8:33	9:24	0:51	1562	1591	29			1588.76	0.41	306.97	210	899	100	5	5-8	2,300	2,100	
R	9:35	10:30	0:55	1591	1620	29						210	899	100	5	5-8	2,300	2,100	
R	10:55	11:32	0:37	1620	1649	29						210	899	100	5	5-8	2,400	2,200	
R	11:50	13:01	1:11	1649	1677	28			1674.20	0.58	302.18	210	899	100	5	5-8	2,470	2,300	
R	13:20	14:17	0:57	1677	1706	29						210	899	100	5	5-8	2,500	2,300	
R	14:37	15:20	0:43	1706	1735	29						210	899	100	5	5-8	2,550	2,350	
R	15:37	16:32	0:55	1735	1764	29						210	899	100	5	5-8	2,650	2,450	SCR

TIME BREAKDOWN:

Rotated Time : 1:00 **Hrs/Mins** **Feet Rotated:** 775.0

Slide Time : **Hrs/Mins** **Feet Slid:**

Total Time : 1:00 **Hrs/ Mins** **Feet Drilled :** 775.0

WELL#	Callister-1	DATE:	21-Oct-04	Depth In :	787	MD	Pump Output	4.28	Gal / stk	Planned Angle :	Page 3 of 3
										Planned Direction :	

BHA # 4 **BIT#** 4 **BHA :** PDC Bit

SURVEY SPACING = 25.07

GAMMA SPACING = 19.16

DLS & Depths are, 1=°/100Ft, 2=°/30Mts, 3=°/10Mts: 1

30"x 20" Casing Shoe Set @ 192m MD

	DRILLING TIME			Motor Work Sheet				AVG	SURVEY			STK /	FLOW			TORQ	PRESSURE		REMARKS
R / S	START	STOP	SUM	FROM	TO	Feet Rotated	Feet Slide	TF	DEPTH	INCL	AZM	MIN	RATE	RPM	WOB	kft-lbs	On Bottom	Off Bottom	
R	16:54	18:01	1:07	1764	1791	27			1759.79	0.77	300.09	210	899	100	5	5-8	2,650	2,450	
R	18:17	19:19	1:02	1791	1820	29						210	899	100	5	5-8	2,650	2,450	
R	19:32	20:56	1:24	1820	1848	28			1847.14	0.95	294.58	210	899	100	5	5-8	2,650	2,450	
R	21:12	22:20	1:08	1848	1876	28						210	899	100	5	5-8	2,400	2,300	
R	22:38	0:10	1:32	1876	1905	29						210	899	100	10	5-8	2,300	2,200	Top Drive's lub pump failure
R	14:55	15:45	0:50	1905	1933	28			1930.43	0.89	302.24	210	899	100	10	5-8	2,700	2,500	
R	15:55	17:10	1:15	1933	1962	29						210	899	100	10	5-8	2,700	2,500	
R	17:32	18:58	1:26	1962	1991	29						210	899	100	15	5-8	2,700	2,500	
R	19:02	20:30	1:28	1991	2019	28			2017.36	0.91	307.00	210	899	100	15	5-8	2,700	2,500	
R	20:38	22:24	1:46	2019	2047	28						210	899	100	15	5-8	2,700	2,500	
R	22:42	0:22	1:40	2047	2076	29						210	899	100	15	5-8	2,700	2,500	
R	0:32	1:49	1:17	2076	2104	28			2103.93	0.96	309.22	210	899	100	15	5-8	2,700	2,500	
R	2:01	3:07	1:06	2104	2133	29						210	899	100	15	5-8	2,700	2,500	
R	3:19	4:50	1:31	2133	2161	28						210	899	100	15	5-8	2,700	2,500	
R	5:00	6:07	1:07	2161	2190	29			2187.51	0.94	306.90	210	899	100	15	5-8	2,700	2,500	
R	6:17	7:38	1:21	2190	2219	29						210	899	100	15	5-8	2,700	2,500	
R	7:55	9:02	1:07	2219	2247	28						210	899	100	15	5-8	2,800	2,600	
R	9:15	10:16	1:01	2247	2275	28			2273.18	1.01	323.23	210	899	100	15	9	2,800	2,600	
R	10:34	11:57	1:23	2275	2304	29						210	899	100	15	9	2,800	2,600	
R	12:21	13:37	1:16	2304	2332	28						210	899	100	15	9	2,800	2,600	
R	13:48	15:09	1:21	2332	2361	29			2358.91	0.97	322.75	210	899	100	15	9	2,900	2,700	
R	15:22	16:55	1:33	2361	2390	29						210	899	100	15	9	2,900	2,700	
R	17:12	18:12	1:00	2390	2417	27						210	899	100	15	9	3,000	2,800	
R	18:33	19:55	1:22	2417	2446	29			2445.35	0.96	329.95	210	899	100	15	9	3,000	2,800	
R	20:10	21:14	1:04	2446	2474	28						210	899	100	15	9	3,000	2,800	
R	21:35	23:04	1:29	2474	2503	29						210	899	100	15	9	3,000	2,800	
R	23:19	0:30	1:11	2503	2532	29			2524.68	1.01	330.09	210	899	100	15	9	3,000	2,800	
R	0:30	1:45	1:15	2532	2550	18						210	899	100	15	9	3,000	2,800	

TIME BREAKDOWN:

Rotated Time : 12:02 **Hrs/Mins** **Feet Rotated:** 786.0

Slide Time : **Hrs/Mins** **Feet Slid:**

Total Time : 12:02 **Hrs/ Mins** **Feet Drilled :** 786.0

Schlumberger

DOWN-HOLE MOTOR RUN REPORT

Ft, Mt

Motor Size :	9 5/8"	Serial No :	2099	Run No :	1	BHA No:	3	Mt

Company	Santos South Australia	**Well**	Callister-1	**Slot**	1	**Field**	Callister
		Location	Otway Basin	**Country**	Australia		
Operator	Transocean	**Rig**	Jack Bates	**Engineer**	B Manjenic	**Date**	21-Oct-04

Bit Size	Make	Type	IADC	Jets	Jets	Jets	Jets	TFA
12 1/4"	Reed	DSX194	0	9.11	0.00	0.00	0.00	0.835

IADC CUTTING STRUCTURE

Inner Row	Outer Row	Dull Char'	Location	Brg/Seals	Gauge	Others	Reason for Trip
8	8	RO	A	X	1	ER	PR

Motor Made By	Size	Model / Type	Rotor/Stator	Serial No	Hsg Stab OD	° Bent Hsg	° Bent Sub
Anadrill	9 5/8"	A962M	7:8	2099	12 1/8"	0°	n/a

Type	**1** = Straight; **2** = Steerable; **3** = Double Bend	**Stator Ser Nº**	272936-18551	**Rotor Ser Nº**	272937-13672	**Drlg Cmt, Wash/Ream**	6.7
2		**Drlg Hrs**	8.60	**Circ Hrs**	4.10	**Total Motor Circ Hrs**	19.40

Purpose of Run To drill 12 1/4" hole section to planned depth of 2550m MD

BHA

PDC Bit
X/O
A962MGT7848
Float Sub
12 1/4" Roller Reamer
CDR9
PowerPulse
12 1/4" Roller Reamer
9 1/2" NM Drill Collar
X/O
8 x 8" DC
8" Jar
2 x 8" Drill Collar
8" Accelerator
8" Drill Collar
12 x 5" HWDP
5" DP to Surface

Surveys	MD IN	787.00	Inclin	0.45	Azim	331.69
	MD OUT	989.00	Inclin	0.22	Azim	170.41

Flow Rate GPM	Off Bttm PSI	On Bttm PSI	RPM	WOB Klbs
1070	2,700	2,450	100	25-45

Mud Type	KCL/PHPA	**Mud Wt**	8.85	**Mud Grad'**	0.459	**Vis**	46
PV	9	**Filtrate**	9.40	**% Solids**	3.80	**Aniline Pt**	n/a
YP	7	**% Oil**	96.2	**% Sand**	0.30	**Circ Temp**	76

Depth In	787	**Depth Out**	989	**Inter'l Drld**	202	
Date In	20-Oct-04	**Date Out**	21-Oct-04	**ROP**	23.49	
Time In	0:00	**Time Out**	16:00	**Time BRT**	40.00	Hrs

FAILURE?	No	Slide Mts		Previous Hrs	0.00	Cumulative Hrs	19.40

Remarks / Failure Report.

1) Motor was checked prior to RIH.
2) Motor will be used for the next run in the BHA#4, bearing play out 0.0mm

Did Motor Stall		Bearing Play	
No	No	In	0.0 mm
Slide	Rty	Out	0.0 mm
No	No	Condition	
		Good	

Schlumberger

DOWN-HOLE MOTOR RUN REPORT

Ft, Mt

Motor Size :	9 5/8"	Serial No :	2099	Run No :	2	BHA No:	4	Mt

Company	Santos South Australia	**Well**	Callister-1	**Slot**	1	**Field**	Callister
		Location	Otway Basin	**Country**	Australia		
Operator	Transocean	**Rig**	Jack Bates	**Engineer**	B Manjenic	**Date**	26-Oct-04

Bit Size	Make	Type	IADC	Jets	Jets	Jets	Jets	TFA
12 1/4"	Reed	DSX104	0	5.14	0.00	0.00	0.00	0.752

IADC CUTTING STRUCTURE

Inner Row	Outer Row	Dull Char'	Location	Brg/Seals	Gauge	Others	Reason for Trip
6	5	WT	A	X	I	SS	TC

Motor Made By	Size	Model / Type	Rotor/Stator	Serial No	Hsg Stab OD	° Bent Hsg	° Bent Sub
Anadrill	9 5/8"	A962M	7:8	2099	12 1/8"	0°	n/a

Type	**1** = Straight; **2** = Steerable; **3** = Double Bend	**Stator Ser Nº**	272936-18551	**Rotor Ser Nº**	272937-13672	**Drlg Cmt, Wash/Ream**	3.0
2		**Drlg Hrs**	57.60	**Circ Hrs**	15.50	**Total Motor Circ Hrs**	76.10

Purpose of Run To drill 12 1/4" hole section to planned depth of 2550m MD

BHA

PDC Bit
X/O
A962MGT7848
Float Sub
12 1/4" Roller Reamer
CDR9
PowerPulse
12 1/4" Roller Reamer
9 1/2" NM Drill Collar
X/O
8 x 8" DC
8" Jar
2 x 8" Drill Collar
8" Accelerator
8" Drill Collar
12 x 5" HWDP

Surveys						
	MD IN	989.00	**Inclin**	0.22	**Azim**	170.41
	MD OUT	2550.00	**Inclin**	1.01	**Azim**	330.09

Flow Rate GPM	Off Bttm PSI	On Bttm PSI	RPM	WOB Klbs
1070	2,800	3,000	100	25-45

Mud Type	KCL/PHPA	**Mud Wt**	9.18	**Mud Grad'**	0.476	**Vis**	59
PV	15	**Filtrate**	5.80	**% Solids**	8.00	**Aniline Pt**	n/a
YP	15	**% Oil**	92	**% Sand**	0.75	**Circ Temp**	110

Depth In	989	**Depth Out**	2550	**Inter'l Drld**	1561	
Date In	21-Oct-04	**Date Out**	26-Oct-04	**ROP**	27.10	
Time In	18:00	**Time Out**	15:30	**Time BRT**	111.50	Hrs

FAILURE?	No	Slide Mts		Previous Hrs	19.40	Cumulative Hrs	95.50

Remarks / Failure Report.

1) Motor was checked prior to RIH.
2) Motor was flushed with water and laid out for back up on next well,

Did Motor Stall	
No	No
Slide	Rty
No	No

Bearing Play	
In	0.0 mm
Out	1.0 mm
Condition	
Good	

Schlumberger

Santos

BIT GRADING CHART

BIT RUN DATA # 3

Bit Size:	12 1/4"	
Manufacturer:	Reed	
Bit Type:	DSX194	
Serial Number:	207742	
New Bit:	Yes	
IADC Code:	0	
Number of Nozzles:	9	
Size of Nozzles:	11/32"	
Number of Blades:	6	
Number of Cutters:	n/a	n/a
Size of Cutters:	n/a	n/a
T.F.A. (sq ins):	0.8353	
W.O.B. :	5-40 klbs	
Depth Out:	989 m	
Depth In:	787 m	
Feet Drilled:	202 m	
Rotating Hours:	8.60 hrs	
Steering Hours:	0.00 hr	
Feet Rotary:	202 m	
Feet Steered:	0 m	
Total Hours:	8.60 hrs	
Average R.O.P:	23.49 m / hr	
Circulation Rate:	1070 gpm	
R.P.M. at Bit:	218	
K.Revs:		
Motor Used:	Yes	
Motor Size:	9 5/8"	
Bit Good for Rerun:	No	

WELL DATA

Date:	21-Oct-04
Drilling Supervisor:	Brian Huston
Rig:	Jack Bates
Well Number:	Callister-1
Rig Contractor:	Transocean
Average Hole Angle:	0° - 3°
Date in:	20-Oct-04
Date Out:	21-Oct-04
BHA #	3

MUD AND LITHOLOGY DATA

Majority Formation:	Sandstone
Other Formation:	Siltstone
% Formation:	100%
Mud Type:	KCL/PHPA
Mud Weight:	8.85 ppg
PV:	9
YP:	7
% Solids:	3.80
PH:	11

COMMENTS:

BIT GRADING

(A)	(A)	(B)	(C)	(D)	(E)	(B)	(F)
8	8	RO	A	X	1	ER	PR

BIT GRADING CHART AS PER IADC NOMENCLATURE

CUTTING STRUCTURE				B	G	REMARKS	
INNER ROWS	OUTER ROWS	DULL CHAR.	LOC ATION.	BRING SEALS	GAUGE 1/16"	OTHER CHAR.	REASON PULLED
(A)	(A)	(B)	(C)	(D)	(E)	(B)	(F)

(A)	0	No Wear
	8	No Cutting structure

(B)	*BC	Broken Cone
	BF	Bond Failure
	BT	Broken Teeth/Cutters
	BU	Balled Up
	*CC	Cracked Cone
	*CD	Cone Dragged
	CI	Cone Interference
	CR	Cored
	CT	Chipped Cutter
	ER	Erosion
	FC	Flat Crested Wear
	HC	Heat Checking
	JD	Junk Damage
	*LC	Lost Cone
	LN	Lost Nozzle
	LT	Lost Teeth/Cutter
	OC	Off-Centre Wear
	PB	Pinched Bit
	PN	Plugged Nozzle/ Flow Passage
	RG	Rounded Gauge
	RO	Ring Out
	SD	Shirttail Damage
	SS	Self Sharpening Wear
	TR	Tracking
	WO	Washed Out-Bit
	WT	Worn Teeth / Cutters
	NO	No Dull Characteristics

(C)	N	Nose Row	Cone#	1
	M	Middle Row		2
	G	Gauge Row		3
	A	All Rows		

(D)	NON-SEALED BEARINGS:	
	0	No life used
	8	All life used
	SEALED BEARINGS:	
	E	Effective
	F	Failed

(E)	1	In Gauge
	1/16	1/16" Undergauge
	2/16	1/8" Undergauge etc.

(F)	BHA	Change BHA
	DMF	Downhole Motor Fail
	DSF	Drill String Fail
	DST	Drill Stem Test
	DTF	Downhole Tool Fail
	LOG	Run Logs
	RIG	Rig Repair
	CM	Condition mud
	CP	Core Point
	DP	Drill Plug
	FM	Formation Change
	HP	Hole Problems
	HR	Hours
	PP	Pump Pressure
	PR	Penetration Rate
	TD	Total Depth
	TC	Casing Depth
	TQ	Torque
	TW	Twist-Off
	WC	Weather Conditions
	WO	Washout/Drill String

Schlumberger

Santos

BIT GRADING CHART

BIT RUN DATA # 4

Bit Size:	12 1/4"	
Manufacturer:	Reed	
Bit Type:	DSX104	
Serial Number:	10893	
New Bit:	Yes	
IADC Code:	0	
Number of Nozzles:	5	
Size of Nozzles:	14/32"	
Number of Blades:	5	
Number of Cutters:	n/a	n/a
Size of Cutters:	n/a	n/a
T.F.A. (sq ins):	0.7517	
W.O.B. :	5-40 klbs	
Depth Out:	2550 m	
Depth In:	989 m	
Feet Drilled:	1561 m	
Rotating Hours:	57.60 hrs	
Steering Hours:	0.00 hr	
Feet Rotary:	1561 m	
Feet Steered:	0 m	
Total Hours:	57.60 hrs	
Average R.O.P:	27.10 m / hr	
Circulation Rate:	1070 gpm	
R.P.M. at Bit:	218	
K.Revs:	648710	
Motor Used:	Yes	
Motor Size:	9 5/8"	
Bit Good for Rerun:	No	

WELL DATA

Date:	26-Oct-04
Drilling Supervisor:	Brian Huston
Rig:	Jack Bates
Well Number:	Callister-1
Rig Contractor:	Transocean
Average Hole Angle:	0° - 3°
Date in:	21-Oct-04
Date Out:	26-Oct-04
BHA #	4

MUD AND LITHOLOGY DATA

Majority Formation:	Siltstone
Other Formation:	Sandstone
% Formation:	100%
Mud Type:	KCL/PHPA
Mud Weight:	9.18 ppg
PV:	15
YP:	15
% Solids:	8.00
PH:	11

COMMENTS:

BIT GRADING

(A)	(A)	(B)	(C)	(D)	(E)	(B)	(F)
6	5	WT	A	X	I	SS	TC

BIT GRADING CHART AS PER IADC NOMENCLATURE

CUTTING STRUCTURE				B	G	REMARKS	
INNER ROWS	OUTER ROWS	DULL CHAR.	LOC ATION.	BRING SEALS	GAUGE 1/16"	OTHER CHAR.	REASON PULLED
(A)	(A)	(B)	(C)	(D)	(E)	(B)	(F)

(A)	0	No Wear
	8	No Cutting structure

(B)	*BC	Broken Cone
	BF	Bond Failure
	BT	Broken Teeth/Cutters
	BU	Balled Up
	*CC	Cracked Cone
	*CD	Cone Dragged
	CI	Cone Interference
	CR	Cored
	CT	Chipped Cutter
	ER	Erosion
	FC	Flat Crested Wear
	HC	Heat Checking
	JD	Junk Damage
	*LC	Lost Cone
	LN	Lost Nozzle
	LT	Lost Teeth/Cutter
	OC	Off-Centre Wear
	PB	Pinched Bit
	PN	Plugged Nozzle/ Flow Passage
	RG	Rounded Gauge
	RO	Ring Out
	SD	Shirttail Damage
	SS	Self Sharpening Wear
	TR	Tracking
	WO	Washed Out-Bit
	WT	Worn Teeth / Cutters
	NO	No Dull Characteristics

(C)	N	Nose Row	Cone#	1
	M	Middle Row		2
	G	Gauge Row		3
	A	All Rows		

(D)	NON-SEALED BEARINGS:	
	0	No life used
	8	All life used
	SEALED BEARINGS:	
	E	Effective
	F	Failed

(E)	1	In Gauge
	1/16	1/16" Undergauge
	2/16	1/8" Undergauge etc.

(F)	BHA	Change BHA
	DMF	Downhole Motor Fail
	DSF	Drill String Fail
	DST	Drill Stem Test
	DTF	Downhole Tool Fail
	LOG	Run Logs
	RIG	Rig Repair
	CM	Condition mud
	CP	Core Point
	DP	Drill Plug
	FM	Formation Change
	HP	Hole Problems
	HR	Hours
	PP	Pump Pressure
	PR	Penetration Rate
	TD	Total Depth
	TC	Casing Depth
	TQ	Torque
	TW	Twist-Off
	WC	Weather Conditions
	WO	Washout/Drill String

SECTION 4: PRODUCTION TEST REPORTS

No production tests were conducted at the Callister-1 location.

SECTION 5: DAILY GEOLOGICAL REPORTS

Santos

A.C.N. 007 550 923

WELL PROGRESS REPORT

CALLISTER 1

DATE: 14/10/04

REPORT NO: 1

DEPTH : 192m **PROGRESS:** 34 m **DAYS FROM SPUD:** 0.5
(As at 2400 hours EST, 13/10/04)

OPERATION : SUPPORTING WEIGHT OF CONDUCTOR WHILE WAITING ON CEMENT
(0600 hours EST, 14/10/04)

AFE COST **CUMULATIVE COST**

CASING DEPTH: 191m (762mm- 30" Conductor- Preliminary) **RIG: JACK BATES**
RT – SEAFLOOR: 158.4 m
PROGRAMMED TD: 3629m **ROTARY TABLE:** 29m LAT **WATER DEPTH:** 129.4 m

MUD DATA (2400 Hours)	Type: Spud Mud	Wt: 1.04	Vis:	FL:	PH:	KCl	Cl :	PV / YP:	Rmf:

BIT DATA (2400 Hours)		No.	Make	Type	Size (mm)	Hours	Drilled	Condition
	PRESENT							
	LAST	1	Smith	DSJC	914	3	34	0-0-NO- - 0-I- - TD

SURVEYS: MD (m) INC AZIM (T)

PREVIOUS 24 HOURS OPERATIONS SUMMARY:
MAKE UP 660mm (26") X 914mm (36") DRILLING ASSEMBLY. RUN IN HOLE, TAG SEABED AT 158.42m (TIDE CORRECTED). SPUD CALLISTER-1 AT 12:00 HRS ON 13/10/04. DRILL FROM 158m TO 192m. ATTEMPT ANDERDRIFT SURVEY, HOLE U-TUBING. DISPLACE 1.5x HOLE VOLUME. PERFORM WIPER TRIP TO 165m & BACK TO BOTTOM AT 192m, DISPLACE 1.5x HOLE VOLUME. PULL OUT WITH DRILLING ASSEMBLY. RUN 762mm (30") CONDUCTOR TO 191m (PRELIMINARY).

00:00 – 06:00 HOURS 14/10/04:
RIG UP & PRESSURE TEST CEMENT LINES, CEMENT CONDUCTOR. SUPPORT WEIGHT OF CONDUCTOR WHILE WAITING ON CEMENT

ANTICIPATED OPERATIONS:
RETRIEVE RUNNING TOOL. MAKEUP 444mm (17.5") DRILLING ASSEMBLY TO DRILL CEMENT & SHOE.

Santos

A.C.N. 007 550 923

WELL PROGRESS REPORT

CALLISTER 1

DATE: 14/10/04

REPORT NO: 1

FORMATION TOPS:	MD RT	Subsea	H/L to Prognosis	H/L to Bridgewater Bay 1

HYDROCARBON SHOW SUMMARY		
INTERVAL	**LITHOLOGY**	**GAS**

GEOLOGICAL SUMMARY		
INTERVAL ROP (m/hr)	**LITHOLOGY** Returns to sea	**GAS**

Santos

A.C.N. 007 550 923

WELL PROGRESS REPORT

CALLISTER 1

DATE: 15/10/04

REPORT NO: 2

DEPTH : 192m **PROGRESS:** 0 m **DAYS FROM SPUD: 1.5**
(As at 2400 hours EST, 14/10/04)

OPERATION : REPAIRING MUD PUMP PRIOR TO DRILLING OUT CEMENT, SHOE AND 444mm (17.5") SECTION.
(0600 hours EST, 15/10/04)

AFE COST **CUMULATIVE COST**

CASING DEPTH: 191m (762mm- 30" Conductor- Preliminary) **RIG: JACK BATES**
RT – SEAFLOOR: 158.4 m

PROGRAMMED TD: 3629m **ROTARY TABLE:** 29m LAT **WATER DEPTH:** 129.4 m

MUD DATA (2400 Hours)	Type:	Wt:	Vis:	FL:	PH:	KCl	Cl :	PV / YP:	Rmf:
	Spud Mud	1.04							

BIT DATA (2400 Hours)		No.	Make	Type	Size (mm)	Hours	Drilled	Condition
	PRESENT	2	Reed	T111	444	-	-	-
	LAST	1	Smith	DSJC	914	3	34	0-0-NO- - 0-I- - TD

SURVEYS: MD (m) INC AZIM (T)

PREVIOUS 24 HOURS OPERATIONS SUMMARY:
PRESSURE TEST CEMENT LINES. CEMENT 762mm (30") CONDUCTOR WITH 36.5 M3 (230 BBLS) OF 1.9SG (15.8 PPG) CEMENT SLURRY, DISPLACE WITH 7.6 M3 (48 BBLS) SEAWATER. RELEASE & LAYOUT RUNNING TOOL ASSEMBLY. LAYOUT 660mm (26") x 914mm (36") BHA. MAKEUP 444mm (17.5") DRILLING ASSEMBLY TEST ANDERDRIFT SURVEY TOOL. RUN IN HOLE TO 150m. SKID RIG OVER WELL.

00:00 – 06:00 HOURS 15/10/04:
RUN IN HOLE, TAG CEMENT AT 185m, DRILL CEMENT FROM 185m TO 187m. REPAIR MUD PUMP – LARGE RAG FOUND.

ANTICIPATED OPERATIONS:
DRILL CEMENT, SHOE TRACK. DRILL AHEAD 444mm (17.5") HOLE AT 30 M/HR.

Santos

A.C.N. 007 550 923

WELL PROGRESS REPORT

CALLISTER 1

DATE: 15/10/04

REPORT NO: 2

FORMATION TOPS:	MD RT	Subsea	H/L to Prognosis	H/L to Bridgewater Bay 1

HYDROCARBON SHOW SUMMARY		
INTERVAL	**LITHOLOGY**	**GAS**

GEOLOGICAL SUMMARY		
INTERVAL ROP (m/hr)	**LITHOLOGY** Returns to sea	**GAS**

Santos

A.C.N. 007 550 923

WELL PROGRESS REPORT

CALLISTER 1

DATE: 16/10/04

REPORT NO: 3

(As at 2400 hours 15/10/04) **DEPTH :** 501 mMD **PROGRESS:** 309 m **DAYS FROM SPUD :** 2.5

OPERATION: DRILLING AHEAD 444mm (17.5") SECTION WITH RETURNS TO SEAFLOOR..

(As at 0600 hours 16/10/04) **DEPTH :** 593 mMD **PROGRESS 0600-0600 hrs**: 401 m

OPERATION : DRILLING AHEAD 444mm (17.5") SECTION WITH RETURNS TO SEAFLOOR AT 25 M/HR

AFE COST **CUMULATIVE COST**

CASING DEPTH: 192m (762mm- 30" Conductor) **RIG: JACK BATES**

RT – SEAFLOOR: 158.4 m

PROGRAMMED TD: 3629m **ROTARY TABLE:** 29m LAT **WATER DEPTH:** 129.4 m

MUD DATA (2400 Hours)	Type:	Wt: SG	Vis:	FL:	PH:	KCl	Cl :	PV / YP:	Rmf:
	Spud Mud	1.04							

BIT DATA (2400 Hours)		No.	Make	Type	Size (mm)	Hours	Drilled	Condition
	PRESENT	2	Reed	T11 (Rock)	444	10.5	309	-
	LAST	1	Smith	DSJC	914	3	34	0-0-NO- - 0-I- - TD

SURVEYS:

MD (m)	INC	AZIM (T)
471	1.5	-
501	1.0	-
528	1.0	-
557	1.0	-
586	1.0	-

PREVIOUS 24 HOURS OPERATIONS SUMMARY:
RUN IN HOLE, TAG TOP OF CEMENT AT 185m. DRILL CEMENT FROM 185m TO 187m. TROUBLESHOOT & REPAIR MUD PUMP (LARGE RAG FOUND). FLUSH OUT PUMP LUBRICATING SYSTEM. DRILL SHOE TRACK (SHOE @ 192m). DRILL AHEAD 444mm (17.5") HOLE FROM 192m TO 501m AT 30 M/HR WITH RETURNS TO SEAFLOOR. PUMP SWEEP MID-STAND AND SPOT HI-VIS GEL AT EACH CONNECTION. RECORD SURVEYS AT EACH CONNECTION.

00:00 – 06:00 HOURS 16/10/04:
DRILL AHEAD 444mm (17.5") HOLE FROM 501m TO 590m WITH RETURNS TO SEAFLOOR. PUMP SWEEP MID-STAND AND SPOT HI-VIS GEL AT EACH CONNECTION. RECORD SURVEYS AT EACH CONNECTION.

ANTICIPATED OPERATIONS:
DRILL AHEAD 444mm (17.5") HOLE TO 790m. CIRCULATE HOLE CLEAN. DISPLACE HOLE TO GEL MUD, SPOT PILL ON BOTTOM, PULL OUT OF HOLE TO RUN 340mm (13.375") CASING.

Santos

A.C.N. 007 550 923

WELL PROGRESS REPORT

CALLISTER 1

DATE: 16/10/04

REPORT NO: 3

FORMATION TOPS:	MD RT	Subsea	H/L to Prognosis	H/L to Bridgewater Bay 1

HYDROCARBON SHOW SUMMARY		
INTERVAL	**LITHOLOGY**	**GAS**

GEOLOGICAL SUMMARY		
INTERVAL ROP (m/hr)	**LITHOLOGY** Returns to sea	**GAS**

Santos

A.C.N. 007 550 923

WELL PROGRESS REPORT

CALLISTER 1

DATE: 17/10/04

REPORT NO: 4

(As at 2400 hours 16/10/04) **DEPTH :** 787.5 mMD **PROGRESS:** 286.5 m **DAYS FROM SPUD :** 3.5

OPERATION: CLEAR RIGFLOOR PRIOR TO RUNNING CASING.

(As at 0600 hours 17/10/04) **DEPTH :** 787.5 mMD **PROGRESS 0600-0600 hrs:** 194.5 m

OPERATION : RUNNING 340mm (13.375") CASING – (7 OF 46 JOINTS RUN)

AFE COST **CUMULATIVE COST**

CASING DEPTH: 192m (762mm- 30" Conductor) **RIG: JACK BATES**

RT – SEAFLOOR: 158.4 m

PROGRAMMED TD: 3629m **ROTARY TABLE:** 29m LAT **WATER DEPTH:** 129.4 m

---

MUD DATA (2400 Hours)	Type:	Wt: SG	Vis:	FL:	PH:	KCl	Cl :	PV / YP:	Rmf:
	Seawater / Spud Mud	1.04							

BIT DATA (2400 Hours)		No.	Make	Type	Size (mm)	Hours	Drilled	Condition
	PRESENT	2	Reed	T11 (Rock)	444	24.3	595.5	-
	LAST	1	Smith	DSJC	914	3	34	0-0-NO- - 0-I- - TD

SURVEYS:

MD (m)	INC	AZIM (T)
701	1.0	-
728	0.5	-
756	1.0	-
787	1.0	-

PREVIOUS 24 HOURS OPERATIONS SUMMARY:
DRILL AHEAD 444mm (17.5") HOLE FROM 501m TO 787.5m WITH RETURNS TO SEAFLOOR. PUMP SWEEP MID-STAND AND SPOT HI-VIS GEL AT EACH CONNECTION. RECORD SURVEYS AT EACH CONNECTION. 444mm (17.5") SECTION TOTAL DEPTH REACHED AT 17:45 HRS ON 16/10/04. CIRCULATE HOLE CLEAN, TAKE SURVEY, DISPLACE HOLE TO HI-VIS MUD, SPOT KCl PILL ON BOTTOM. PULL OUT OF HOLE, CHANGEOUT ELEVATORS, LAYOUT ANDERDRIFT SURVEY TOOL, STABILISER & PONY DRILL COLLAR.

00:00 – 06:00 HOURS 17/10/04:
CLEAR RIGFLOOR PRIOR TO CASING JOB. RIG UP TO RUN CASING. MAKE UP SHOE & FLOAT JOINT, TROUBLESHOOT ELEVATORS, RUN 340mm (13.375") CASING.

ANTICIPATED OPERATIONS:
COMPLETE RUNNING 340mm (13.375") CASING. CEMENT CASING.

Santos

A.C.N. 007 550 923

WELL PROGRESS REPORT

CALLISTER 1

DATE: 17/10/04

REPORT NO: 4

FORMATION TOPS:	MD RT	Subsea	H/L to Prognosis	H/L to Bridgewater Bay 1

HYDROCARBON SHOW SUMMARY		
INTERVAL	**LITHOLOGY**	**GAS**

GEOLOGICAL SUMMARY		
INTERVAL ROP (m/hr)	**LITHOLOGY** Returns to sea	**GAS**

Santos

A.C.N. 007 550 923

WELL PROGRESS REPORT

CALLISTER 1

DATE: 18/10/04

REPORT NO: 5

(As at 2400 hours 17/10/04) **DEPTH :** 787.5 mMD **PROGRESS:** 0 m **DAYS FROM SPUD :** 4.5

OPERATION: BREAKOUT CEMENT HEAD WHILE TROUBLESHOOTING DRILLERS CONTROL PANEL.

(As at 0600 hours 18/10/04) **DEPTH :** 787.5 mMD **PROGRESS 0600-0600 hrs:** 0 m

OPERATION : RIGGING UP TO RUN BOP STACK & MARINE RISER.

AFE COST **CUMULATIVE COST**

340mm (13 3/8") CASING DEPTH: 778m **RIG: JACK BATES**
RT – SEAFLOOR: 158.4 m

PROGRAMMED TD: 3629m **ROTARY TABLE:** 29m LAT **WATER DEPTH:** 129.4 m

MUD DATA (2400 Hours)	Type:	Wt: SG	Vis:	FL:	PH:	KCl	Cl :	PV / YP:	Rmf:
	Spud Mud	1.04							

BIT DATA (2400 Hours)		No.	Make	Type	Size (mm)	Hours	Drilled	Condition
	PRESENT							
	LAST	2	Reed	T11 (Rock)	444	24.3	595.5	4-4-WT-A-4-1-NO-TD
		1	Smith	DSJC	914	3	34	0-0-NO- - 0-I- - TD

SURVEYS:

MD (m)	INC	AZIM (T)
756	1.0	-
787	1.0	-

PREVIOUS 24 HOURS OPERATIONS SUMMARY:
CLEAR RIGFLOOR, RIG UP TO RUN CASING. HOLD SAFETY MEETING. MAKE UP SHOE & FLOAT JOINT, TROUBLESHOOT ELEVATORS, RUN 340mm (13.375") CASING STRING TO 611m, PICK UP CASING HANGER, RUN IN HOLE FROM 611m TO 623m. CONTINUE TO RUN CASING TO WELLHEAD ON DRILLPIPE. MAKEUP CEMENT STAND, LAND OUT CASING & TEST LATCH WITH 22.7MT (50KLBS) OVERPULL. RIG UP & TEST CEMENTING LINES. CIRCULATE (1x) HOLE VOLUME PRIOR TO CEMENT JOB. CEMENT CASING AS PER PROGRAM – LEAD SLURRY: 65M3 (411BBLS) OF 1.5SG (12.5PPG); TAIL SLURRY: 12M3 (75.2BBLS) OF 1.9SG (15.8PPG) TAIL SLURRY. DISPLACE WITH 47M3 (295BBLS) SEAWATER. RELEASE RUNNING TOOL, PULL OUT OF HOLE. HOLD SAFETY MEETING, COMMENCE RIG UP TO RUN RISER & BOP STACK. TROUBLESHOOT FAULT IN DRILLERS CONTROL PANEL. RIG DOWN RISER & BOP RUNNING EQUIPMENT. BREAKOUT CEMENT HEAD WHILE TROUBLESHOOTING FAULT IN DRILLERS CONTROL PANEL.

00:00 – 06:00 HOURS 18/10/04:
CONTINUE TO TROUBLESHOOT FAULT IN DRILLERS CONTROL PANEL WHILE LAYING DOWN CEMENT HEAD. RIG UP TO RUN RISER & BOP STACK.

ANTICIPATED OPERATIONS:
RUN BOP STACK & MARINE RISER. TEST BOP STACK. MAKE UP 311mm (12.25") BHA.

Santos

A.C.N. 007 550 923

WELL PROGRESS REPORT

CALLISTER 1

DATE: 18/10/04

REPORT NO: 5

FORMATION TOPS:	MD RT	Subsea	H/L to Prognosis	H/L to Bridgewater Bay 1

HYDROCARBON SHOW SUMMARY		
INTERVAL	**LITHOLOGY**	**GAS**

GEOLOGICAL SUMMARY		
INTERVAL ROP (m/hr)	**LITHOLOGY** Returns to sea	**GAS**

Santos

A.C.N. 007 550 923

WELL PROGRESS REPORT

CALLISTER 1

DATE: 19/10/04

REPORT NO: 6

(As at 2400 hours 18/10/04) **DEPTH :** 787.5 mMD **PROGRESS:** 0 m **DAYS FROM SPUD :** 5.5

OPERATION: PREPARING TO LAND BOP STACK.

(As at 0600 hours 19/10/04) **DEPTH :** 787.5 mMD **PROGRESS 0600-0600 hrs:** 0 m

OPERATION : RIGGING DOWN RISER HANDLING EQUIPMENT, HAVING LANDED BOP STACK.

AFE COST **CUMULATIVE COST**

340mm (13 3/8") CASING DEPTH: 778m **RIG: JACK BATES**

RT – SEAFLOOR: 158.4 m

PROGRAMMED TD: 3629m **ROTARY TABLE:** 29m LAT **WATER DEPTH:** 129.4 m

MUD DATA (2400 Hours)	Type:	Wt: SG	Vis:	FL:	PH:	KCl	Cl :	PV / YP:	Rmf:
	Spud Mud	1.04							

BIT DATA (2400 Hours)		No.	Make	Type	Size (mm)	Hours	Drilled	Condition
	PRESENT	2	Reed	T11 (Rock)	444	24.3	595.5	4-4-WT-A-4-1-NO-TD
	LAST	1	Smith	DSJC	914	3	34	0-0-NO- - 0-I- - TD

SURVEYS:

MD (m)	INC	AZIM (T)
756	1.0	-
787	1.0	-

PREVIOUS 24 HOURS OPERATIONS SUMMARY:
RECTIFY DRILLERS CONTROL PANEL FAULT. RIG UP RISER HANDLING EQUIPMENT. FUNCTION TEST RAMS & ANNULAR FROM RIGFLOOR & TOOLPUSHER'S PANELS. COMMENCE RUNNING MARINE RISER & SUBSEA BOP STACK. PRESSURE TEST CHOKE & KILL LINES TO 9.6/239KPA (200/5000PSI) AND BOOST LINES TO 12/144KPA (250/3000PSI). COMPLETE RUNNING BOP STACK. PICKUP RISER SLIP JOINT.

00:00 – 06:00 HOURS 19/10/04:
MAKE UP LANDING JOINT. LAND & LATCH BOP STACK. PRESSURE TEST WELLHEAD CONNECTOR & CASING TO 144KPA (3000PSI). RIG DOWN RISER HANDLING EQUIPMENT.

ANTICIPATED OPERATIONS:
RIG DOWN RISER HANDLING EQUIPMENT. INSTALL DIVERTER SYSTEM. RUN WEAR BUSHING. MAKE UP 311mm (12.25") BHA, RUN IN HOLE, DRILL OUT SHOE TRACK & 3m FORMATION, CONDUCT LEAKOFF TEST, DRILL AHEAD 311mm (12.25") HOLE.

Santos

A.C.N. 007 550 923

WELL PROGRESS REPORT

CALLISTER 1

DATE: 19/10/04

REPORT NO: 6

FORMATION TOPS: (Preliminary Field Picks)	MD RT	Subsea	H/L to Prognosis	H/L to Bridge-water Bay 1

HYDROCARBON SHOW SUMMARY		
INTERVAL	**LITHOLOGY**	**GAS**

GEOLOGICAL SUMMARY		
INTERVAL ROP (m/hr)	**LITHOLOGY** Returns to sea	**GAS**

Santos

A.C.N. 007 550 923

WELL PROGRESS REPORT

CALLISTER 1

DATE: 20/10/04

REPORT NO: 7

(As at 2400 hours 19/10/04) **DEPTH :** 787.5 mMD **PROGRESS:** 0 m **DAYS FROM SPUD :** 6.5

OPERATION: MAKING UP 311mm (12.25") BOTTOM HOLE ASSEMBLY.

(As at 0600 hours 20/10/04) **DEPTH :** 787.5 mMD **PROGRESS 0600-0600 hrs:** 0 m

OPERATION : RUNNING IN HOLE WITH 311mm (12.25") ASSEMBLY AT 466m.

AFE COST **CUMULATIVE COST**

340mm (13 3/8") CASING DEPTH: 778m **RIG: JACK BATES**
RT – SEAFLOOR: 158.4 m

PROGRAMMED TD: 3629m **ROTARY TABLE:** 29m LAT **WATER DEPTH:** 129.4 m

MUD DATA (2400 Hours)	Mud Type:	Wt: SG	Vis:	FL:	pH:	KCl	Cl :	PV / YP:	Rmf:
	KCL / PHPA	1.06	54	9.6	8.7	8 %	40000	15 / 20	

BIT DATA (2400 Hours)		No.	Make	Type	Size (mm)	Hours	Drilled	Condition
	PRESENT	3	Hycalog	DSX194 (PDC)	311	-	-	-
	LAST	2	Reed	T11 (Rock)	444	24.3	595.5	4-4-WT-A-4-1-NO-TD

SURVEYS:

MD (m)	INC	AZIM (T)
756	1.0	-
787	1.0	-

PREVIOUS 24 HOURS OPERATIONS SUMMARY:
MAKE UP LANDING JOINT. LAND & LATCH BOP STACK. PRESSURE TEST WELLHEAD CONNECTOR & CASING TO 144KPA (3000PSI). RIG DOWN RISER HANDLING EQUIPMENT. RIG TO & INSTALL DIVERTER SYSTEM. CONFIRM LATCH. INSTALL HOSES. RUN & LAND WEAR BUSHING. MAKE UP 244mm (9.625") CASING HANGER IN PREPARATION FOR NEXT CASING STRING & LAYOUT SAME. MAKE UP 311mm (12.25") PDC BIT & ANADRILL MOTOR.

00:00 – 06:00 HOURS 20/10/04:
CONTINUE TO MAKE UP BHA – MAKE UP ANADRILL "CDR-POWERPULSE" MWD TOOLS (GAMMA RAY, RESISTIVITY, ANNULAR PRESSURE, SURVEYS). SHALLOW TEST MWD TOOLS – OKAY. PICK UP REMAINING BHA. RUN IN HOLE WITH 127mm (5") DRILLPIPE.

ANTICIPATED OPERATIONS:
RUN IN HOLE, TAG CEMENT, CHANGEOUT TO MUD, DRILL OUT FLOAT, SHOE TRACK & 3m FORMATION, CONDUCT LEAKOFF TEST, DRILL AHEAD 311mm (12.25") HOLE.

MWD OFFSETS: RESISTIVITY 15.68m, ANNULAR PRESSURE 16.36m, GAMMA RAY 19.16, SURVEYS 25.07m

Santos

A.C.N. 007 550 923

WELL PROGRESS REPORT

CALLISTER 1

DATE: 20/10/04

REPORT NO: 7

FORMATION TOPS: (Preliminary Field Picks)	MD RT	Subsea	H/L to Prognosis	H/L to Bridge-water Bay 1

HYDROCARBON SHOW SUMMARY		
INTERVAL	**LITHOLOGY**	**GAS**

GEOLOGICAL SUMMARY		
INTERVAL ROP (m/hr)	**LITHOLOGY**	**GAS**

Santos

A.C.N. 007 550 923

WELL PROGRESS REPORT

CALLISTER 1

DATE: 21/10/04

REPORT NO: 8

(As at 2400 hours 20/10/04) **DEPTH :** 895 mMD **PROGRESS:** 107.5 m **DAYS FROM SPUD :** 7.5

OPERATION: DRILLING 311mm (12.25") HOLE.

(As at 0600 hours 21/10/04) **DEPTH :** 959 mMD **PROGRESS 0600-0600 hrs**: 171.5 m

OPERATION : DRILLING 311mm (12.25") HOLE AT 959m AT 30 M/HR.

AFE COST **CUMULATIVE COST**

340mm (13 3/8") CASING DEPTH: 778m **RIG: JACK BATES**

RT – SEAFLOOR: 158.4 m

PROGRAMMED TD: 3629m **ROTARY TABLE:** 29m LAT **WATER DEPTH:** 129.4 m

MUD DATA (2400 Hours)	Mud Type:	Wt: SG	Vis:	FL:	pH:	KCl	Cl :	PV / YP:	Rmf:
	KCL / PHPA	1.06	43	8.4	10	7.8 %	38000	12 / 15	

BIT DATA (2400 Hours)		No.	Make	Type	Size (mm)	Hours	Drilled	Condition
	PRESENT	3	Hycalog	DSX194 (PDC)	311	4.0	107.5	-
	LAST	2	Reed	T11 (Rock)	444	24.3	595.5	4-4-WT-A-4-1-NO-TD

SURVEYS:

MD (m)	INC (°)	AZIM (°T)	CLOSURE (m)	DIRECTION (°)
874.56	1.05	344.29		
903.94	1.25	333.65		
931.51	1.37	331.34	11	355

PREVIOUS 24 HOURS OPERATIONS SUMMARY:
CONTINUE TO MAKE UP BHA WITH ANADRILL "CDR-POWERPULSE" MWD TOOLS (GAMMA RAY, RESISTIVITY, ANNULAR PRESSURE, SURVEYS). SHALLOW TEST MWD TOOLS – OKAY. PICK UP REMAINING BHA. RUN IN HOLE WITH 127mm (5") DRILLPIPE, TAG TOP OF CEMENT AT 739m. DRILL CEMENT, FLOAT & SHOE TRACK (SHOE AT 778m). DISPLACE HOLE TO KCL/PHPA MUD WHILE DRILLING CEMENT. DRILL FORMATION TO 790m. CIRCULATE BOTTOMS UP. CONDUCT LEAK OFF TEST. EQUIVALENT MUD WEIGHT=1.58SG (13.2PPG), SURFACE PRESSURE 28.2KPA (590 PSI) WITH 1.056SG (8.8PPG) MUD. DRILL AHEAD FROM 790m TO 895m.

00:00 – 06:00 HOURS 21/10/04:
DRILL AHEAD FROM 895m TO 959m IN THE DILWYN FORMATION.

ANTICIPATED OPERATIONS:
DRILL AHEAD 311mm (12.25") HOLE.

MWD OFFSETS: RESISTIVITY 15.68m, ANNULAR PRESSURE 16.36m, GAMMA RAY 19.16, SURVEYS 25.07m

Santos

A.C.N. 007 550 923

WELL PROGRESS REPORT

CALLISTER 1

DATE: 21/10/04

REPORT NO: 8

FORMATION TOPS: (Preliminary Field Picks)	MD RT	Subsea	H/L to Prognosis	H/L to Bridge-water Bay 1

HYDROCARBON SHOW SUMMARY		
INTERVAL	**LITHOLOGY**	**GAS**

GEOLOGICAL SUMMARY		
INTERVAL ROP (m/hr)	**LITHOLOGY**	**GAS**
787.5 – 825m ROP: 15-93 Ave: 39	MASSIVE MARL WITH MINOR CALCILUTITE MARL: Light grey to light green grey, argillaceous in part, very calcareous, grading to calcareous claystone, soft and sticky, firm in part, amorphous to subblocky CALCILUTITE: Light grey to light brown grey, firm to moderately hard, occasionally hard, sub blocky.	< 1 unit 100% C1
825 – 853m ROP: 18-71 Ave: 37	CALCAREOUS CLAYSTONE INTERBEDDED WITH MINOR CALCARENITE AND CALCILUTITE CALCAREOUS CLAYSTONE: Brown, light to medium brown grey, argillaceous, grades to Marl in part, firm to moderately hard, sub blocky. CALCARENITE: Brown, yellow brown, light grey, light olive grey, fine to occasionally medium grained, well cemented, moderately hard to hard, sub blocky. CALCILUTITE: Light brown, friable to moderately hard, subblocky.	< 1 unit 100% C1
853 – 950m ROP: 21-73 Ave: 31	MASSIVE SANDSTONE WITH MINOR CLAYSTONE INTERBEDS SANDSTONE: Clear, translucent, very light grey, occasionally medium grey, fine to medium, common coarse grained, moderately sorted, subangular to subrounded, rarely rounded, commonly angular, rare to trace pyrite, dominantly loose, clean, fair inferred porosity, no fluorescence. CLAYSTONE: Light to medium brown, brown grey, light olive grey, soft, dispersive in part, silty in part, grades to Siltstone in part, subblocky.	< 1 unit 100% C1

Santos

A.C.N. 007 550 923

WELL PROGRESS REPORT

CALLISTER 1

DATE: 22/10/04

REPORT NO: 9

(As at 2400 hours 21/10/04) **DEPTH :** 990 mMD **PROGRESS:** 95 m **DAYS FROM SPUD :** 8.5

OPERATION: RUNNING IN HOLE WITH NEW PDC BIT.

(As at 0600 hours 22/10/04) **DEPTH :** 1015 mMD **PROGRESS 0600-0600 hrs:** 56 m

OPERATION : DRILLING 311mm (12.25") HOLE AT 1015m AT 25 M/HR.

AFE COST **CUMULATIVE COST**

340mm (13 3/8") CASING DEPTH: 778m **RIG: JACK BATES**
RT – SEAFLOOR: 158.4 m

PROGRAMMED TD: 3629m **ROTARY TABLE:** 29m LAT **WATER DEPTH:** 129.4 m

MUD DATA (2400 Hours)	Mud Type:	Wt: SG	Vis:	FL:	pH:	KCl%	Cl :	PV / YP:	Rmf:
	KCL / PHPA	1.07	46	8.0	9	8.1	45000	15 / 20	0.076 @ 27°C

BIT DATA (2400 Hours)		No.	Make	Type	Size (mm)	Hours	Drilled	Condition
	PRESENT	4	Hycalog	DSX104 (PDC)	311	-	-	-
	LAST	3	Hycalog	DSX194 (PDC)	311	6.2	202.5	8-8-RO-A-X-1-ER-PR

SURVEYS:

MD (m)	INC (°)	AZIM (°T)	CLOSURE (m)	DIRECTION (°)
959.28	0.22	170.41		
990.11	1.04	330.11	11	354

PREVIOUS 24 HOURS OPERATIONS SUMMARY:
DRILL 311mm (12.25") HOLE IN THE DILWYN FORMATION FROM 895m TO 990m. OBSERVE LOW PENETRATION RATES. PULL OUT OF HOLE TO CHANGE BIT. DOWNLOAD ANADRILL MWD MEMORY, MAKE UP NEW PDC BIT, RUN IN HOLE TO 709m, FILLING PIPE EVERY 10 STANDS.

00:00 – 06:00 HOURS 22/10/04:
CONTINUE TO RUN IN HOLE TO CASING SHOE. SLIP & CUT DRILLING LINE. RUN IN HOLE TO BOTTOM, CIRCULATE & DRILL AHEAD FROM 990m TO 1015m AT 06:00HRS

ANTICIPATED OPERATIONS:
DRILL AHEAD 311mm (12.25") HOLE.

MWD OFFSETS: RESISTIVITY 15.65m, ANNULAR PRESSURE 16.33m, GAMMA RAY 19.13m, SURVEYS 25.04m

Santos

A.C.N. 007 550 923

WELL PROGRESS REPORT

CALLISTER 1

DATE: 22/10/04

REPORT NO: 9

FORMATION TOPS: (Preliminary Field Picks)	MD RT	Subsea	H/L to Prognosis	H/L to Bridge-water Bay 1

HYDROCARBON SHOW SUMMARY		
INTERVAL	**LITHOLOGY** No shows	**GAS**

GEOLOGICAL SUMMARY		
INTERVAL ROP (m/hr)	**LITHOLOGY**	**GAS**
950 – 990m ROP: 12-57 Ave: 40	MASSIVE SANDSTONE INTERBEDDED WITH CLAYSTONE SANDSTONE: Clear, translucent, light grey, occasionally medium grey, fine to medium, trace coarse to very coarse grained, moderately sorted, subangular to subrounded, minor rounded, commonly angular, trace weak calcareous cement, rare to trace pyrite, generally clean and loose, clean, fair inferred porosity, no fluorescence. CLAYSTONE: Light to medium brown, light brown grey, minor dark brown, dispersive in part, silty in part, grades to Siltstone in part, subblocky to amorphous.	< 1 unit 100% C1

Santos

A.C.N. 007 550 923

WELL PROGRESS REPORT

CALLISTER 1

DATE: 23/10/04

REPORT NO: 10

(As at 2400 hours 22/10/04) **DEPTH :** 1403 mMD **PROGRESS:** 413 m **DAYS FROM SPUD :** 9.5

OPERATION: DRILLING 311mm (12.25") HOLE

(As at 0600 hours 23/10/04) **DEPTH :** 1513 mMD **PROGRESS 0600-0600 hrs:** 498 m

OPERATION : DRILLING 311mm (12.25") HOLE AT 30 M/HR.

AFE COST **CUMULATIVE COST**

340mm (13 3/8") CASING DEPTH: 778m **RIG: JACK BATES**

RT – SEAFLOOR: 158.4 m

PROGRAMMED TD: 3629m **ROTARY TABLE:** 29m LAT **WATER DEPTH:** 129.4 m

MUD DATA (2400 Hours)	Mud Type:	Wt: SG	Vis:	FL:	pH:	KCl%	Cl :	PV / YP:	Rmf:
	KCL / PHPA	1.08	46	8.0	8.7	8.2	48000	13 / 19	0.076 @ 27°C

BIT DATA (2400 Hours)		No.	Make	Type	Size (mm)	Hours	Drilled	Condition
	PRESENT	4	Hycalog	DSX104 (PDC)	311	11.9	413m	-
	LAST	3	Hycalog	DSX194 (PDC)	311	6.2	202.5	8-8-RO-A-X-1-ER-PR

SURVEYS:

MD (m)	INC (°)	AZIM (°T)	CLOSURE (m)	DIRECTION (°)
1417.46	0.62	318.06		
1447.76	0.51	316.13		
1476.30	0.56	320.25	**18**	**342**

PREVIOUS 24 HOURS OPERATIONS SUMMARY:
CONTINUE TO RUN IN HOLE TO CASING SHOE. SLIP & CUT DRILLING LINE. RUN IN HOLE TO BOTTOM, CIRCULATE & DRILL 311mm (12.25") HOLE FROM 990m TO 1403m WITH SURVEYS.

00:00 – 06:00 HOURS 22/10/04:
DRILL AHEAD FROM 1403m TO 1513m AT 06:00HRS

ANTICIPATED OPERATIONS:
DRILL AHEAD 311mm (12.25") HOLE.

MWD OFFSETS: RESISTIVITY 15.65m, ANNULAR PRESSURE 16.33m, GAMMA RAY 19.13m, SURVEYS 25.04m

Santos

A.C.N. 007 550 923

WELL PROGRESS REPORT

CALLISTER 1

DATE: 23/10/04

REPORT NO: 10

FORMATION TOPS: (Preliminary Field Picks)	MD RT	Subsea	H/L to Prognosis	H/L to Bridge-water Bay 1

HYDROCARBON SHOW SUMMARY		
INTERVAL	**LITHOLOGY**	**GAS**
	No shows	

GEOLOGICAL SUMMARY		
INTERVAL ROP (m/hr)	**LITHOLOGY**	**GAS**
990 – 1085m ROP: 9-102 Ave: 49	MASSIVE CLAYSTONE CLAYSTONE: Dark brown grey, pale to medium yellow brown, dark brown, very soft to soft, dispersive, trace disseminated pyrite, subblocky, amorphous.	< 1 unit 100/trace CO2: Trace
1085 - 1105m ROP: 22-73 Ave: 48	MASSIVE CLAYSTONE WITH MINOR SANDSTONE INTERBEDS CLAYSTONE: Medium to dark brown, dark yellowish brown, very soft to soft, trace pyrite, subblocky, amorphous, dispersive, grades to Siltstone in part SANDSTONE: Clear to translucent, white, occasionally yellow brown, generally loose quartz grains, fine to dominantly coarse, locally very coarse, subangular to subrounded, moderately poorly sorted, trace glauconite, trace pyrite, trace quartz overgrowths, slightly silty to argillaceous matrix, no cement, trace black inclusion, friable to moderately hard, fair inferred porosity, no show	< 1 unit 100 % C1 CO2: Trace
1105 -1131m ROP: 16-74 Ave: 49	MASSIVE CLAYSTONE CLAYSTONE: Brown to dark brown, very soft to soft, dispersive, trace pyrite, grading to Siltstone in part, sub blocky, amorphous,	< 1 unit 100 % C1 CO2: Trace

Santos

A.C.N. 007 550 923

WELL PROGRESS REPORT

CALLISTER 1

DATE: 23/10/04

REPORT NO: 10

GEOLOGICAL SUMMARY		
INTERVAL ROP (m/hr)	**LITHOLOGY**	**GAS**
1131 - 1146m ROP: 32-86 Ave: 63	INTERBEDDED SANDSTONE AND CLAYSTONE SANDSTONE: Pale grey, clear to translucent, predominantly medium grained, minor coarse to very coarse grained, moderately well sorted, subangular to subrounded, trace weak siliceous cement, trace quartz overgrowths, trace pyrite, trace glauconite, trace black lithic fragments, rare friable to moderately hard aggregates, generally loose, fair inferred porosity, no hydrocarbon fluorescence.	< 1 unit 100 % C1 CO2: Trace
1146 – 1152m ROP: 28-50 Ave: 38	CLAYSTONE: Brown to dark brown, soft, dispersive, silty in part grades to Siltstone, subblocky, amorphous.	< 1 unit 100 % C1 CO2: Trace
1152 – 1198m ROP: 20-89 Ave: 48	INTERBEDDED SANDSTONE AND CLAYSTONE SANDSTONE: Clear to transparent, white, pale grey, yellowish brown in part, dominantly loose quartz grains, medium to coarse, occasionally very coarse, subangular to subrounded, moderately well sorted, trace glauconite, trace pyrite, trace quartz overgrowth, slightly silty to argillaceous matrix, trace black inclusions, fair inferred porosity, no show CLAYSTONE: Brown to dark brown, soft, dispersive, silty in part grades to Siltstone, subblocky, amorphous.	< 1 unit 100 % C1 CO2: Trace
1198 – 1240m ROP: 3-108 Ave: 58	INTERBEDDED SANDSTONE AND CLAYSTONE SANDSTONE: Translucent to transparent, generally clean loose quartz grains, predominantly medium to coarse, commonly fine, sub rounded to rounded, occasionally sub angular, moderately sorted, trace argillaceous matrix, no cement, trace pyrite cement, slightly micromicaceous, fair inferred porosity, no shows CLAYSTONE: Brown to olive brown, very soft, dispersive, amorphous, minor carbonaceous specks, specks, grading to Siltstone.	< 1 unit 100 % C1 CO2: Trace
1240 – 1303m ROP: 11-103 Ave: 45	CLAYSTONE INTERBEDDED WITH SANDSTONE CLAYSTONE: Olive grey to brown, brown grey, very soft to dispersive, amorphous, silty in places, non calcareous, trace pyrite, trace mica, grading to Siltstone in places SANDSTONE: Translucent to transparent, light grey, occasionally yellow brown, loose quartz grains, predominantly fine to medium grains, common coarse to very coarse, poorly sorted, subrounded to rounded, minor subangular, argillaceous matrix, trace siliceous cement, minor pyrite cement, slightly micromicaceous, friable to moderately hard, generally loose and clean, fair to poor inferred porosity, no shows	< 1 unit 100 % C1 CO2: Trace

Santos

A.C.N. 007 550 923

WELL PROGRESS REPORT

CALLISTER 1

DATE: 23/10/04

REPORT NO: 10

GEOLOGICAL SUMMARY		
INTERVAL ROP (m/hr)	**LITHOLOGY**	**GAS**
1303 - 1372m ROP: 5-79 Ave: 34	INTERBEDDED CLAYSTONE AND SANDSTONE CLAYSTONE: Olive grey to brown, trace mica, trace pyrite, soft to very soft, dispersive in places, silty in part, grading to Siltstone in places SANDSTONE: Translucent to transparent, light grey, occasionally yellow brown, loose quartz grains, fine to predominantly medium grains, common coarse, moderately sorted, subrounded to rounded, minor subangular, trace argillaceous matrix, trace weak siliceous cement, trace mica, fair to poor inferred porosity, no shows.	< 1 unit 100 % C1 CO2: Trace
1372 - 1447m ROP: 5-59 Ave: 31	INTERBEDDED SANDSTONE AND CLAYSTONE SANDSTONE: Clear to translucent, light grey, fine to medium, minor coarse, moderately sorted, subrounded to rounded, minor subangular, trace weak siliceous cement, trace pyrite cement, trace argillaceous matrix, minor micromicaceous, poor to fair inferred porosity, no shows CLAYSTONE: Brown grey to brown, medium to dark brown, trace mica, trace pyrite, soft to very soft, dispersive in places, increasingly silty in part, grading to Siltstone.	< 1 unit 100 % C1 CO2: Trace
1447 - 1501m ROP: 7-84 Ave: 32	SILTSTONE INTERBEDDED WITH SANDSTONE SILTSTONE: Brown to dark brown, very argillaceous, grades to Claystone, soft, dispersive, rare pyrite, trace glauconite, trace carbonaceous specks, commonly subblocky to amorphous. SANDSTONE: Clear to translucent, light grey, loose quartz grains, predominantly fine to medium, minor coarse, moderate well sorted, subrounded to subangular, trace argillaceous matrix, no cement, trace pyrite, poor to fair inferred porosity, no shows.	< 1 unit 100/trace/trace % CO2: Trace

Santos

A.C.N. 007 550 923

WELL PROGRESS REPORT

CALLISTER 1

DATE: 24/10/04

REPORT NO: 11

(As at 2400 hours 23/10/04) **DEPTH :** 1896 mMD **PROGRESS:** 493 m **DAYS FROM SPUD :** 10.5

OPERATION: DRILLING 311mm (12.25") HOLE

(As at 0600 hours 24/10/04) **DEPTH :** 1919 mMD **PROGRESS 0600-0600 hrs:** 406 m

OPERATION : PULLING OUT INTO CASING SHOE FOR TOP DRIVE REPAIRS (BIT @ 1190m AT 06:00HRS).

AFE COST **CUMULATIVE COST**

340mm (13 3/8") CASING DEPTH: 778m **RIG: JACK BATES**

RT – SEAFLOOR: 158.4 m

PROGRAMMED TD: 3629m **ROTARY TABLE:** 29m LAT **WATER DEPTH:** 129.4 m

MUD DATA (2400 Hours)	Mud Type:	Wt: SG	Vis:	FL:	pH:	KCl%	Cl :	PV / YP:	Rmf:
	KCL / PHPA	1.08	47	6.8	8.2	8.0	46000	17 / 21	0.076 @ 27°C

BIT DATA (2400 Hours)		No.	Make	Type	Size (mm)	Hours	Drilled	Condition
	PRESENT	4	Hycalog	DSX104 (PDC)	311	29.5	906m	-
	LAST	3	Hycalog	DSX194 (PDC)	311	6.2	202.5	8-8-RO-A-X-1-ER-PR

SURVEYS:

MD (m)	INC (°)	AZIM (°T)	CLOSURE (m)	DIRECTION (°)
1674.20	0.58	302.18		
1759.79	0.77	300.09		
1847.14	0.95	294.58	22	336

PREVIOUS 24 HOURS OPERATIONS SUMMARY:
DRILL 311mm (12.25") HOLE FROM 1403m TO 1896m WITH SURVEYS.

00:00 – 06:00 HOURS 24/10/04:
DRILL AHEAD FROM 1896m TO 1919m . CIRCULATE BOTTOMS UP, PULL OUT OF HOLE TO CASING SHOE FOR TOP DRIVE REPAIRS.

ANTICIPATED OPERATIONS:
REPAIR TOP DRIVE. RUN IN HOLE, DRILL AHEAD 311mm (12.25") HOLE TO CASING POINT (NOTE: POTENTIAL BIT CHANGE ON THIS TRIP)

MWD OFFSETS: RESISTIVITY 15.65m, ANNULAR PRESSURE 16.33m, GAMMA RAY 19.13m, SURVEYS 25.04m

Santos

A.C.N. 007 550 923

WELL PROGRESS REPORT

CALLISTER 1

DATE: 24/10/04

REPORT NO: 11

FORMATION TOPS: (Preliminary Field Picks)	MD RT	Subsea	H/L to Prognosis	H/L to Bridge-water Bay 1
	***			

HYDROCARBON SHOW SUMMARY		
INTERVAL	**LITHOLOGY**	**GAS**
	No shows	

GEOLOGICAL SUMMARY		
INTERVAL ROP (m/hr)	**LITHOLOGY**	**GAS**
1501 – 1657m ROP: 7-99 Ave: 41	MASSIVE SILTSTONE WITH MINOR SANDSTONE SILTSTONE: Brown to dark brown, dark brown grey, very argillaceous, grades to Claystone, soft to firm, partly dispersive, rare pyrite, slightly calcareous, trace carbonaceous specks, subblocky. SANDSTONE: Clear to translucent, medium to coarse, moderately sorted, subangular to angular, trace argillaceous matrix, no cement, generally loose and clean quartz, trace nodular pyrite, poor to fair inferred porosity, no shows.	0.4 – 14 units 98/2/trace % CO2: Trace BG
1657-1716m ROP: 4-82 Ave: 43	SANDSTONE INTERBEDDED WITH SILTSTONE SANDSTONE: Light grey, occasionally clear to translucent, medium to coarse grained, occasional fine, moderately sorted, subrounded to rounded, moderately hard siliceous cement, trace brown argillaceous matrix, trace glauconite, slightly micromicaceous, common loose, moderately hard to hard, friable in part, poor visual and inferred porosity, no shows. SILTSTONE: Olive grey to brown, very argillaceous, very soft to dispersive, sticky in parts, trace mica, grading to Claystone.	1 – 11 units 97/3/trace % CO2: Trace BG

Santos

A.C.N. 007 550 923

WELL PROGRESS REPORT

CALLISTER 1

DATE: 24/10/04

REPORT NO: 11

GEOLOGICAL SUMMARY		
INTERVAL ROP (m/hr)	**LITHOLOGY**	**GAS**
1716-1780m ROP: 10-73 Ave: 39	INTERBEDDED SANDSTONE AND SILTSTONE SANDSTONE: Light grey to yellow brown, occasional clear to translucent, fine to medium grained, rare coarse grains, moderately sorted, subrounded to rounded, occasionally subangular, moderately strong calcareous cement, light brown argillaceous matrix, friable in parts, very hard to hard, trace glauconite, poor inferred porosity, no shows. SILTSTONE: Olive grey to brown, soft to dispersive, amorphous to sub blocky, very argillaceous, minor black carbonaceous specks, slightly micromicaceous, grades to Claystone in parts	1 – 10 units 98/2/trace % CO2: Trace BG
1780-1857m ROP: 10-76 Ave: 31	SILTSTONE INTERBEDDED WITH SANDSTONE SILTSTONE: Brown, brown grey, olive grey, soft to firm, occasionally dispersive, argillaceous, grades to Claystone, trace carbonaceous specks, slightly micromicaceous, subblocky. SANDSTONE: Light grey, minor yellow brown aggregates, translucent to transparent, fine to medium grained, occasional coarse grains, poorly sorted, subrounded to rounded, occasionally subangular, siliceous cement, slightly calcareous in part, trace light brown argillaceous matrix, friable in part, very hard to hard, trace glauconite, poor inferred porosity, no shows	1 – 18 units 98/2/trace % CO2: Trace BG
1857-1919m ROP: 4-72 Ave: 24	INTERBEDDED SANDSTONE AND SILTSTONE SANDSTONE: Light grey to yellow brown aggregates, occasionally loose clear to translucent, light grey, commonly fine to medium grains, rare coarse, poorly sorted, subrounded to subangular, trace moderately strong siliceous cement, slightly calcareous, trace light brown to white argillaceous matrix, friable in parts, moderate hard to hard, trace glauconite, trace black lithic fragments, poor inferred porosity, no shows, trace mineral fluorescence SILTSTONE: Olive grey to brown, soft to dispersive, amorphous to sub blocky, very argillaceous, minor black carbonaceous specks, trace mica, grading to Claystone in parts	1 – 10 units 98/2/trace % CO2: Trace BG

Santos

A.C.N. 007 550 923

WELL PROGRESS REPORT

CALLISTER 1

DATE: 25/10/04

REPORT NO: 12

(As at 2400 hours 24/10/04) **DEPTH :** 2066 m **PROGRESS:** 170 m **DAYS FROM SPUD :** 11.5

OPERATION: DRILLING 311mm (12.25") HOLE

(As at 0600 hours 25/10/04) **DEPTH :** 2185 m **PROGRESS 0600-0600 hrs:** 266 m

OPERATION : DRILLING 311mm (12.25") HOLE AT 25 M/HR

AFE COST **CUMULATIVE COST**

340mm (13 3/8") CASING DEPTH: 778m **RIG: JACK BATES**

RT – SEAFLOOR: 158.4 m

PROGRAMMED TD: 3629m **ROTARY TABLE:** 29m LAT **WATER DEPTH:** 129.4 m

MUD DATA (2400 Hours)	Mud Type:	Wt: SG	Vis:	FL:	pH:	KCl%	Cl :	PV / YP:	Rmf:
	KCL / PHPA	1.08	48	3.8	9.0	7.5	40000	16 / 21	0.095 @ 20.5°C

BIT DATA (2400 Hours)		No.	Make	Type	Size (mm)	Hours	Drilled	Condition
	PRESENT	4	Hycalog	DSX104 (PDC)	311	37.7	1076m	-
	LAST	3	Hycalog	DSX194 (PDC)	311	6.2	202.5	8-8-RO-A-X-1-ER-PR

SURVEYS:

MD (m)	INC (°)	AZIM (°T)	CLOSURE (m)	DIRECTION (°)
1930.43	0.89	302.24		
2017.36	0.91	307.00		
2103.93	0.96	309.22	25	3301

PREVIOUS 24 HOURS OPERATIONS SUMMARY:
DRILL AHEAD FROM 1896m TO 1919m . CIRCULATE BOTTOMS UP, PULL OUT OF HOLE INTO CASING FOR TOP DRIVE REPAIRS. REPAIR TOP DRIVE LUBRICATION MOTOR, RUN BACK IN HOLE, WASH LAST STAND TO BOTTOM. DRILL AHEAD 311mm (12.25") HOLE FROM 1919m TO 2066m.

00:00 – 06:00 HOURS 25/10/04:
DRILL AHEAD 311mm (12.25") HOLE FROM 2066m TO 2185m.

ANTICIPATED OPERATIONS:
DRILL AHEAD 311mm (12.25") HOLE TO CASING POINT.

MWD OFFSETS: RESISTIVITY 15.65m, ANNULAR PRESSURE 16.33m, GAMMA RAY 19.13m, SURVEYS 25.04m

Santos

A.C.N. 007 550 923

WELL PROGRESS REPORT

CALLISTER 1

DATE: 25/10/04

REPORT NO: 12

FORMATION TOPS: (Preliminary Field Picks)	MD RT	Subsea	H/L to Prognosis	H/L to Bridge-water Bay 1

HYDROCARBON SHOW SUMMARY		
INTERVAL	**LITHOLOGY**	**GAS**
	No shows	

GEOLOGICAL SUMMARY		
INTERVAL ROP (m/hr)	**LITHOLOGY**	**GAS**
1919-1960m ROP: 6-40 Ave: 26	MASSIVE SILTSTONE INTERBEDDED WITH SANDSTONE SILTSTONE: Olive grey to brown, soft to dispersive, argillaceous in part, in part very finely arenaceous grading to fine grained Sandstone, common carbonaceous specks, amorphous to subblocky, SANDSTONE: Light grey, minor grey brown aggregates, clear to translucent, very fine to fine grained, common medium grained, rare coarse, poorly sorted, subrounded to subangular, trace moderately strong siliceous cement, trace light brown to white argillaceous matrix, friable in parts, moderate hard to hard, trace glauconite, trace black lithic fragments, poor inferred porosity, no shows.	1 – 18 units 99/1/trace % CO2: 400ppm BG
1960-1997 ROP: 10-61 Ave: 27	MASSIVE SILTSTONE INTERBEDDED WITH MINOR SANDSTONE SILTSTONE: Olive black to dark brown, soft to firm, amorphous to subblocky, argillaceous in part, dominantly very finely arenaceous grading to fine grained Sandstone, common carbonaceous specks. SANDSTONE: Light grey, minor grey brown, clear to translucent, very fine to fine grained, becoming fine to medium grained with depth, rare coarse, poorly sorted, subrounded to subangular, trace moderately strong siliceous cement, trace light brown to white argillaceous matrix, friable in parts, moderate hard to hard, trace black lithic fragments, poor inferred porosity, no shows.	7 – 19 units 99/1 % CO2: 400ppm BG

Santos

A.C.N. 007 550 923

WELL PROGRESS REPORT

CALLISTER 1

DATE: 25/10/04

REPORT NO: 12

GEOLOGICAL SUMMARY		
INTERVAL ROP (m/hr)	**LITHOLOGY**	**GAS**
1997-2030m ROP: 8-63 Ave: 27	SANDSTONE INTERBEDDED WITH SILTSTONE SANDSTONE: Light grey, minor yellow brown, clear to translucent, fine to medium, minor coarse, moderately well sorted, subrounded to rounded, minor subangular, trace moderately strong siliceous cement, common light brown argillaceous matrix, predominantly loose, friable in parts, occasional moderately hard to hard aggregates, poor to fair inferred porosity, no shows SILTSTONE: Olive black to dark brown, soft to firm, common black carbonaceous specks, minor dispersive, generally arenaceous, grading to Sandstone in part, subblocky.	2 – 16 units 100/trace % CO2: 400ppm BG
2030-2160m ROP: 6-94 Ave:26	MASSIVE SILTSTONE WITH MINOR TO TRACE SANDSTONE SILTSTONE: Olive black to dark brown, soft to firm, dispersive in part, common black carbonaceous specks, arenaceous, grading to Sandstone in part, subblocky. SANDSTONE: Light grey, clear to translucent, trace medium grey, fine to medium, rare coarse, moderately sorted, subrounded to subangular, minor rounded, trace moderately strong siliceous and calcareous cement, common light brown argillaceous matrix, friable in parts, moderately hard to hard, poor to fair inferred porosity, no shows, trace mineral fluorescence	2 – 28 units 97/3/trace % CO2: 400ppm BG

Santos

A.C.N. 007 550 923

WELL PROGRESS REPORT

CALLISTER 1

DATE: 26/10/04

REPORT NO: 13

(As at 2400 hours 25/10/04) **DEPTH :** 2522 m **PROGRESS:** 456 m **DAYS FROM SPUD :** 12.5

OPERATION: DRILLING 311mm (12.25") HOLE

(As at 0600 hours 26/10/04) **DEPTH :** 2550 m **PROGRESS 0600-0600 hrs:** 365 m

OPERATION : PULLING OUT OF HOLE TO RUN INTERMEDIATE LOGS (BIT @ 2074m AT 06:00HRS)

AFE COST **CUMULATIVE COST**

340mm (13 3/8") CASING DEPTH: 778m **RIG: JACK BATES**

RT – SEAFLOOR: 158.4 m

PROGRAMMED TD: 3629m **ROTARY TABLE:** 29m LAT **WATER DEPTH:** 129.4 m

MUD DATA (2400 Hours)	Mud Type:	Wt: SG	Vis:	FL:	pH:	KCl%	Cl :	PV / YP:	Rmf:
	KCL / PHPA	1.10	59	5.8	9.1	7.0	44000	15 / 32	0.087 @ 21.7°C

BIT DATA (2400 Hours)		No.	Make	Type	Size (mm)	Hours	Drilled	Condition
	PRESENT	4	Hycalog	DSX104 (PDC)	311	56.1	1532m	-
	LAST	3	Hycalog	DSX194 (PDC)	311	6.2	202.5	8-8-RO-A-X-1-ER-PR

SURVEYS:

MD (m)	INC (°)	AZIM (°T)	CLOSURE (m)	DIRECTION (°)
2358.91	0.97	322.75		
2445.35	0.96	329.95		
2524.68	1.01	330.09	32	328

PREVIOUS 24 HOURS OPERATIONS SUMMARY:
DRILL 311mm (12.25") HOLE FROM 2066m TO 2522m.

00:00 – 06:00 HOURS 26/10/04:
DRILL 311mm (12.25") HOLE FROM 2522m TO SECTION TOTAL DEPTH OF 2550m IN THE BELFAST MUDSTONE (REACHED AT 02:00HRS ON 26/10/04). CIRCULATE HOLE CLEAN, PULL OUT OF HOLE TO RUN INTERMEDIATE WIRELINE LOGS.

ANTICIPATED OPERATIONS:
PULL OUT OF HOLE. DOWNLOAD MWD DATA. RIG UP SCHLUMBERGER, RUN INTERMEDIATE LOGS.

Santos

A.C.N. 007 550 923

WELL PROGRESS REPORT

CALLISTER 1

DATE: 26/10/04

REPORT NO: 13

FORMATION TOPS: (Preliminary Field Picks)	MD RT	Subsea	H/L to Prognosis	H/L to Bridge-water Bay 1

HYDROCARBON SHOW SUMMARY		
INTERVAL	**LITHOLOGY**	**GAS**
	No shows	

GEOLOGICAL SUMMARY		
INTERVAL ROP (m/hr)	**LITHOLOGY**	**GAS**
2160-2225m ROP: 9-52 Ave: 27	MASSIVE SILTSTONE WITH MINOR TO TRACE SANDSTONE SILTSTONE: Olive black to dark brown, soft to firm, dispersive in part, common black carbonaceous specks, arenaceous, grading to Sandstone in part, subblocky. SANDSTONE: Light grey, clear to translucent, trace medium grey, fine to medium, rare coarse, moderately sorted, subrounded to subangular, minor rounded, trace moderately strong siliceous and calcareous cement, common light brown argillaceous matrix, friable in parts, moderately hard to hard, poor to fair inferred porosity, no shows, trace mineral fluorescence	4 – 20 units 97/3/trace % CO2: 400ppm
2225-2268 ROP: 18-51 Ave: 29	SANDSTONE INTERBEDDED WITH SILTSTONE SANDSTONE: Clear to translucent, medium to coarse grained, minor very coarse grained, poor to moderately sorted, subangular to subrounded, trace weak siliceous cement, trace argillaceous matrix, trace to locally common glauconite, trace dolomite, poor visual porosity, no shows. SILTSTONE: Dark brown, very arenaceous grading to very fine Sandstone, soft to firm, common carbonaceous specks, trace disseminated glauconite, subblocky.	1 – 20 units 98/2/trace % CO2: 440ppm

Santos

A.C.N. 007 550 923

WELL PROGRESS REPORT

CALLISTER 1

DATE: 26/10/04

REPORT NO: 13

GEOLOGICAL SUMMARY		
INTERVAL ROP (m/hr)	**LITHOLOGY**	**GAS**
2268-2330m ROP: 12-83 Ave: 26	INTERBEDDED SILTSTONE AND SANDSTONE SILTSTONE: Medium to dark grey, light to medium brown, arenaceous in part, locally grading to very fine Sandstone, trace carbonaceous specks, trace glauconite, soft to firm, dispersive in part, sub blocky to amorphous. SANDSTONE: (Trace) Clear to translucent, light grey, medium to coarse grained, moderately poorly sorted, subangular to subrounded, trace strong siliceous and calcareous cement, trace glauconite, friable to hard aggregates, poor visual porosity, no shows.	1 – 18 units 97/3/trace % CO2: 440ppm
2330-2435m ROP: 10-88 Ave: 28	MASSIVE SILTSTONE WITH TRACE SANDSTONE SILTSTONE: Medium to dark grey, light to medium brown, arenaceous in part, locally grading to very fine Sandstone, trace carbonaceous specks, trace glauconite, soft to firm, dispersive in part, sub blocky to amorphous. SANDSTONE: (Trace) Clear to translucent, light grey, medium to coarse grained, moderately poorly sorted, subangular to subrounded, trace strong siliceous and calcareous cement, trace glauconite, friable to hard aggregates, poor visual porosity, no shows.	4 – 44 units 97/3/trace % CO2: 720ppm
2435-2550m ROP: 12-123 Ave: 32	MASSIVE SILTSTONE SILTSTONE: Medium to dark grey, medium to dark brown grey, medium brown, arenaceous in part, locally grading to very fine Sandstone, trace carbonaceous specks, trace lithic fragments, soft to firm, subblocky.	10 – 66 units 97/3/trace % CO2: 790ppm

Santos

A.C.N. 007 550 923

WELL PROGRESS REPORT

CALLISTER 1

DATE: 27/10/04

REPORT NO: 14

(As at 2400 hours 26/10/04) **DEPTH :** 2550 m **PROGRESS:** 28 m **DAYS FROM SPUD :** 13.5

OPERATION: RUNNING INTERMEDIATE WIRELINE LOGS

(As at 0600 hours 27/10/04) **DEPTH :** 2550 m **PROGRESS 0600-0600 hrs:** 0 m

OPERATION : RUNNING INTERMEDIATE WIRELINE LOGS – RECORDING GAMMA RAY TO SURFACE.

AFE COST **CUMULATIVE COST**

340mm (13 3/8") CASING DEPTH: 778m **RIG: JACK BATES**
RT – SEAFLOOR: 158.4 m

PROGRAMMED TD: 3629m **ROTARY TABLE:** 29m LAT **WATER DEPTH:** 129.4 m

MUD DATA (2400 Hours)	Mud Type:	Wt: SG	Vis:	FL:	pH:	KCl%	Cl :	PV/YP:	Rm: 0.0948 @ 22.5°C
	KCL / PHPA	1.09	61	6	9.4	7.0	44000	14 / 24	Rmf: 0.0882 @ 22°C
									Rmc: 0.1083 @ 22.3°C

BIT DATA (2400 Hours)		No.	Make	Type	Size (mm)	Hours	Drilled	Condition
	PRESENT	4	Hycalog	DSX104 (PDC)	311	57.6	1570m	6-5-WT-A-X-I-ER-TD
	LAST	3	Hycalog	DSX194 (PDC)	311	6.2	202.5	8-8-RO-A-X-1-ER-PR

SURVEYS:

MD (m)	INC (°)	AZIM (°T)	CLOSURE (m)	DIRECTION (°)
2358.91	0.97	322.75		
2445.35	0.96	329.95		
2524.68	1.01	330.09	32	328

PREVIOUS 24 HOURS OPERATIONS SUMMARY:
DRILL 311mm (12.25") HOLE FROM 2522m TO SECTION TOTAL DEPTH OF 2550m (CASING POINT REACHED AT 02:00HRS ON 26/10/04). CIRCULATE HOLE CLEAN, PULL OUT OF HOLE TO RUN INTERMEDIATE WIRELINE LOGS. BACKREAM INTERMITTENT TIGHT SPOTS 2090-1866m. CONTINUE TO PULL OUT OF HOLE. DOWNLOAD MWD MEMORY DATA. RIG UP SCHLUMBERGER WIRELINE, RUN IN HOLE WITH RUN 1: SUPER COMBO TO CASING SHOE. RESISTIVITY FAILED. PULL OUT OF HOLE, SWAP TOOLS, RUN IN HOLE. TOOLSTRING HUNG UP AT 2508m, UNABLE TO PASS AFTER 3 ATTEMPTS. LOG UP & RECORD RUN 1: SUPER COMBO.

00:00 – 06:00 HOURS 27/10/04:
CONTINUE RUNNING WIRELINE LOGS.

ANTICIPATED OPERATIONS:
RIG DOWN SCHLUMBERGER. RIG TO AND RUN CASING.

Santos

A.C.N. 007 550 923

WELL PROGRESS REPORT

CALLISTER 1

DATE: 27/10/04

REPORT NO: 14

FORMATION TOPS: (Preliminary Field Picks)	MD RT	Subsea	H/L to Prognosis	H/L to Bridge-water Bay 1

HYDROCARBON SHOW SUMMARY		
INTERVAL	**LITHOLOGY**	**GAS**

GEOLOGICAL SUMMARY		
INTERVAL ROP (m/hr)	**LITHOLOGY**	**GAS**

Santos

A.C.N. 007 550 923

WELL PROGRESS REPORT

CALLISTER 1

DATE: 28/10/04

REPORT NO: 15

(As at 2400 hours 27/10/04) **DEPTH :** 2550 m **PROGRESS:** 0 m **DAYS FROM SPUD :** 14.5

OPERATION: RUNNING 244mm (9 5/8" CASING) @ 870m.

(As at 0600 hours 28/10/04) **DEPTH :** 2550 m **PROGRESS 0600-0600 hrs:** 0 m

OPERATION : RUNNING 244mm (9 5/8" CASING) – 117 / 192 JOINTS RUN

AFE COST **CUMULATIVE COST**

340mm (13 3/8") CASING DEPTH: 778m **RIG: JACK BATES**

RT – SEAFLOOR: 158.4 m

PROGRAMMED TD: 3629m **ROTARY TABLE:** 29m LAT **WATER DEPTH:** 129.4 m

MUD DATA (2400 Hours)	Mud Type:	Wt: SG	Vis:	FL:	pH:	KCl%	Cl :	PV/YP:	Rm: 0.0948 @ 22.5°C
	KCL / PHPA	1.09	61	6	9.4	7.0	44000	14 / 25	Rmf: 0.0882 @ 22°C
									Rmc: 0.1083 @ 22.3°C

BIT DATA (2400 Hours)		No.	Make	Type	Size (mm)	Hours	Drilled	Condition
	PRESENT							
	LAST	4	Hycalog	DSX104 (PDC)	311	57.6	1570m	6-5-WT-A-X-I-ER-TD

SURVEYS:

MD (m)	INC (°)	AZIM (°T)	CLOSURE (m)	DIRECTION (°)
2358.91	0.97	322.75		
2445.35	0.96	329.95		
2524.68	1.01	330.09	32	328

PREVIOUS 24 HOURS OPERATIONS SUMMARY:
RIG DOWN SCHLUMBERGER WIRELINE. MAKE UP RUNNING TOOL & RETRIEVE WEAR BUSHING. RIGUP TO RUN 244mm (9 5/8") CASING. MAKE UP SHOE TRACK & FLOAT JOINT. RUN 244mm (9 5/8" CASING) TO 870m AT 24:00HRS.

00:00 – 06:00 HOURS 28/10/04:
CONTINUE RUNNING CASING TO 1501m

ANTICIPATED OPERATIONS:
RUN CASING TO 2538m. CEMENT CASING. TEST BOP STACK.

Santos

A.C.N. 007 550 923

WELL PROGRESS REPORT

CALLISTER 1

DATE: 28/10/04

REPORT NO: 15

FORMATION TOPS: (Preliminary Field Picks)	MD RT	Subsea	H/L to Prognosis	H/L to Bridge-water Bay 1

HYDROCARBON SHOW SUMMARY		
INTERVAL	**LITHOLOGY**	**GAS**

GEOLOGICAL SUMMARY		
INTERVAL ROP (m/hr)	**LITHOLOGY**	**GAS**

Santos

A.C.N. 007 550 923

WELL PROGRESS REPORT

CALLISTER 1

DATE: 29/10/04

REPORT NO: 16

(As at 2400 hours 28/10/04) **DEPTH :** 2550 m **PROGRESS:** 0 m **DAYS FROM SPUD :** 15.5

OPERATION: PREPARING TO RUN WEAR BUSHING.

(As at 0600 hours 29/10/04) **DEPTH :** 2550 m **PROGRESS 0600-0600 hrs**: 0 m

OPERATION : LAYING OUT 311mm (12.25") ASSEMBLY PRIOR TO MAKING UP 216mm (8.5") ASSEMBLY

AFE COST **CUMULATIVE COST**

244mm (9 5/8") CASING DEPTH: 2538m **RIG: JACK BATES**

RT – SEAFLOOR: 158.4 m

PROGRAMMED TD: 3629m **ROTARY TABLE:** 29m LAT **WATER DEPTH:** 129.4 m

MUD DATA (2400 Hours)	Mud Type:	Wt: SG	Vis:	FL:	pH:	KCl%	Cl :	PV/YP:	Rm: 0.0948 @ 22.5°C
	KCL / PHPA	1.09	61	6	9.4	7.0	44000	14 / 25	Rmf: 0.0882 @ 22°C
									Rmc: 0.1083 @ 22.3°C

BIT DATA (2400 Hours)		No.	Make	Type	Size (mm)	Hours	Drilled	Condition
	PRESENT							
	LAST	4	Hycalog	DSX104 (PDC)	311	57.6	1570m	6-5-WT-A-X-I-ER-TD

SURVEYS:

MD (m)	INC (°)	AZIM (°T)	CLOSURE (m)	DIRECTION (°)
2445.35	0.96	329.95		
2524.68	1.01	330.09	32	328

PREVIOUS 24 HOURS OPERATIONS SUMMARY:
CONTINUE RUNNING CASING TO 2378m. PICKUP CASING HANGER, RUN CASING TO WELLHEAD ON DRILLPIPE. MAKEUP CEMENT STAND, LAND OUT CASING IN WELLHEAD WITH SHOE AT 2538m. RIG UP & PRESSURE TEST CEMENT LINES. CEMENT CASING AS PER PROGRAM, 6.7m3 (42BBLS) LEAD SLURRY, 5.4m3 (34BBLS) TAIL SLURRY. SET & TEST SEAL ASSEMBLY. TEST BOP STACK. PULL OUT OF HOLE.

00:00 – 06:00 HOURS 29/10/04:
MAKEUP WEAR BUSHING RUNNING TOOL, RUN & LAND WEAR BUSHING. PULL OUT OF HOLE WITH RUNNING TOOL. CLOSE SHEAR RAMS, TEST CASING TO 239KPA(5000 PSI). TEST SURFACE EQUIPMENT TO 14.4KPA(300PSI)/230KPA(4800 PSI), TEST UPPER & LOWER IBOPS TO 14.4KPA(300PSI)/239KPA(5000) PSI.

ANTICIPATED OPERATIONS:
LAYOUT 311mm (12.25") ASSEMBLY & ANADRILL EQUIPMENT. MAKEUP 216mm (8.5") ASSEMBLY WITH ANADRILL MWD, RUN IN HOLE. DRILL CEMENT, SHOE TRACK & 3m FORMATION. CONDUCT LEAK-OFF TEST. DRILL AHEAD.

Santos

A.C.N. 007 550 923

WELL PROGRESS REPORT

CALLISTER 1

DATE: 29/10/04

REPORT NO: 16

FORMATION TOPS: (Preliminary Field Picks)	MD RT	Subsea	H/L to Prognosis	H/L to Bridge-water Bay 1

HYDROCARBON SHOW SUMMARY		
INTERVAL	**LITHOLOGY**	**GAS**

GEOLOGICAL SUMMARY		
INTERVAL ROP (m/hr)	**LITHOLOGY**	**GAS**

Santos

A.C.N. 007 550 923

WELL PROGRESS REPORT

CALLISTER 1

DATE: 30/10/04

REPORT NO: 17

(As at 2400 hours 29/10/04) **DEPTH :** 2550 m **PROGRESS:** 0 m **DAYS FROM SPUD :** 16.5

OPERATION: DRILLING CEMENT.

(As at 0600 hours 30/10/04) **DEPTH :** 2553 m **PROGRESS 0600-0600 hrs:** 3 m

OPERATION : PREPARING TO DRILL AHEAD 216mm (8.5") HOLE, HAVING CONDUCTED LEAK-OFF TEST.

AFE COST **CUMULATIVE COST**

244mm (9 5/8") CASING DEPTH: 2538m **RIG: JACK BATES**

RT – SEAFLOOR: 158.4 m

PROGRAMMED TD: 3629m **ROTARY TABLE:** 29m LAT **WATER DEPTH:** 129.4 m

MUD DATA (2400 Hours)	Mud Type:	Wt: SG	Vis:	FL:	pH:	KCl%	Cl :	PV/YP:	Rm: 0.0948 @ 22.5°C
	KCL / PHPA	1.10	54	5.6	9.0	8.0	45000	13 / 26	Rmf: 0.0882 @ 22°C
									Rmc: 0.1083 @ 22.3°C

BIT DATA (2400 Hours)		No.	Make	Type	Size (mm)	Hours	Drilled	Condition
	PRESENT	5	Reed	RSX272	216			
	LAST	4	Hycalog	DSX104 (PDC)	311	57.6	1570m	6-5-WT-A-X-I-ER-TD

SURVEYS:	MD (m)	INC (°)	AZIM (°T)	CLOSURE (m)	DIRECTION (°)
	2445.35	0.96	329.95		
	2524.68	1.01	330.09	32	328

PREVIOUS 24 HOURS OPERATIONS SUMMARY:
MAKE UP WEAR BUSHING RUNNING TOOL, RUN & LAND WEAR BUSHING. PULL OUT OF HOLE WITH RUNNING TOOL. CLOSE SHEAR RAMS, TEST CASING TO 239KPA(5000 PSI). TEST SURFACE EQUIPMENT TO 14.4KPA(300PSI)/230KPA(4800 PSI), TEST UPPER & LOWER IBOPS TO 14.4KPA(300PSI)/239KPA(5000) PSI. LAYOUT 311mm (12.25") ASSEMBLY & ANADRILL EQUIPMENT. MAKE UP 216mm (8.5") ASSEMBLY, SHALLOW TEST MWD TOOLS, RUN IN HOLE TO TAG TOP OF CEMENT AT 2450m. DRILL CEMENT TO 2510m AT 24:00HRS

00:00 – 06:00 HOURS 30/10/04:
DRILL CEMENT, SHOE TRACK (SHOE AT 2538m) AND 3m FORMATION FROM 2550m TO 2553m. CIRCULATE BOTTOMS UP. CONDUCT LEAK-OFF TEST WITH 1.10SG (9.2PPG) MUD TO FETCH AN EQUIVALENT MUD WEIGHT OF 1.76SG (14.7 PPG) WITH SURFACE PRESSURE OF 114KPA (2390PSI). TAKE SLOW CIRCULATION PRESSURES, PREPARE TO DRILL AHEAD.

ANTICIPATED OPERATIONS:
DRILL 216mm (8.5") HOLE.

Santos

A.C.N. 007 550 923

WELL PROGRESS REPORT

CALLISTER 1

DATE: 30/10/04

REPORT NO: 17

FORMATION TOPS: (Preliminary Field Picks)	MD RT	Subsea	H/L to Prognosis	H/L to Bridge-water Bay 1

HYDROCARBON SHOW SUMMARY		
INTERVAL	**LITHOLOGY**	**GAS**

GEOLOGICAL SUMMARY		
INTERVAL ROP (m/hr)	**LITHOLOGY**	**GAS**

Santos

A.C.N. 007 550 923

WELL PROGRESS REPORT

CALLISTER 1

DATE: 31/10/04

REPORT NO: 18

(As at 2400 hours 30/10/04) **DEPTH :** 2662 m **PROGRESS:** 112m **DAYS FROM SPUD :** 17.5

OPERATION: PULLING OUT OF HOLE FOR BIT CHANGE

(As at 0600 hours 31/10/04) **DEPTH :** 2662 m **PROGRESS 0600-0600 hrs:** 109 m

OPERATION : RUNNING IN HOLE WITH NEW PDC BIT. (COMPLETED BHA AT 06:00HRS)

AFE COST **CUMULATIVE COST**

244mm (9 5/8") CASING DEPTH: 2538m **RIG: JACK BATES**

RT – SEAFLOOR: 158.4 m

PROGRAMMED TD: 3629m **ROTARY TABLE:** 29m LAT **WATER DEPTH:** 129.4 m

MUD DATA (2400 Hours)	Mud Type:	Wt: SG	Vis:	FL:	pH:	KCl%	Cl :	PV/YP:	Rmf:
	KCL / PHPA	1.13	60	5.6	11.3	7.0	41000	11 / 22	0.1012 @ 19.5°C

BIT DATA (2400 Hours)		No.	Make	Type	Size (mm)	Hours	Drilled	Condition
	PRESENT	6	Reed	DSX104 (PDC)	216			
	LAST	5	Reed	RSX272 (PDC)	216	5.3	112	3-1-BU-A-I-X-WT/CT-PR

SURVEYS:	MD (m)	INC (°)	AZIM (°T)	CLOSURE (m)	DIRECTION (°)
	2559.17	0.98	331.10		
	2616.28	1.09	335.82	34	329

PREVIOUS 24 HOURS OPERATIONS SUMMARY:
DRILL CEMENT, SHOE TRACK (SHOE AT 2538m) AND 3m FORMATION FROM 2550m TO 2553m. CIRCULATE BOTTOMS UP. CONDUCT LEAK-OFF TEST WITH 1.10SG (9.2PPG) MUD TO FETCH AN EQUIVALENT MUD WEIGHT OF 1.76SG (14.7 PPG) WITH SURFACE PRESSURE OF 114KPA (2390PSI). DRILL 216mm (8.5") HOLE FROM 2553m TO 2662m. OBSERVE POOR PENETRATION RATES. PULL OUT OF HOLE FOR BIT CHANGE, PERFORM REPAIRS TO PIPE RACKING SYSTEM AT 2094m. PULL OUT OF HOLE FROM 2094m TO 495m.

00:00 – 06:00 HOURS 31/10/04:
CONTINUE TO PULL OUT OF HOLE FROM 495m TO SURFACE. CHANGE OUT BALLED BIT, MAKE UP NEW PDC BIT, BOTTOM HOLE ASSEMBLY WITH MWD TOOLS. COMPLETE BOTTOM HOLE ASSEMBLY AT 06:00HRS.

ANTICIPATED OPERATIONS:
RUN IN HOLE. DRILL 216mm (8.5") HOLE.

Santos

A.C.N. 007 550 923

WELL PROGRESS REPORT

CALLISTER 1

DATE: 31/10/04

REPORT NO: 18

FORMATION TOPS: (Preliminary Field Picks)	MD RT	Subsea	H/L to Prognosis	H/L to Bridge-water Bay 1

HYDROCARBON SHOW SUMMARY		
INTERVAL	**LITHOLOGY**	**GAS**

GEOLOGICAL SUMMARY		
INTERVAL ROP (m/hr)	**LITHOLOGY**	**GAS**
2550-2662m ROP: 1-69 Ave: 28	MASSIVE SILTSTONE SILTSTONE: Medium to dark grey, grey brown, dominantly medium grey, calcareous, argillaceous grading to Claystone in part, slightly very finely arenaceous, trace to locally common carbonaceous specks, rare pyrite, firm to moderately hard, occasionally soft, subblocky.	Trace to 55 units 92/3/2/3/trace %

Santos

A.C.N. 007 550 923

WELL PROGRESS REPORT

CALLISTER 1

DATE: 01/11/04

REPORT NO: 19

(As at 2400 hours 31/10/04) **DEPTH :** 3003 m **PROGRESS:** 341m **DAYS FROM SPUD :** 18.5

OPERATION: DRILLING 216mm (8.5") HOLE

(As at 0600 hours 01/11/04) **DEPTH :** 3052 m **PROGRESS 0600-0600 hrs:** 390 m

OPERATION : DRILLING 216mm (8.5") HOLE AT 25 M/HR

AFE COST **CUMULATIVE COST**

244mm (9 5/8") CASING DEPTH: 2538m **RIG: JACK BATES**

RT – SEAFLOOR: 158.4 m

PROGRAMMED TD: 3629m **ROTARY TABLE:** 29m LAT **WATER DEPTH:** 129.4 m

MUD DATA (2400 Hours)	Mud Type:	Wt: SG	Vis:	FL:	pH:	KCl%	Cl :	PV/YP:	Rmf:
	KCL / PHPA	1.15	50	4.6	10.8	7.0	43000	17 / 18	0.1012 @ 19.5°C

BIT DATA (2400 Hours)		No.	Make	Type	Size (mm)	Hours	Drilled	Condition
	PRESENT	6	Reed	DSX104 (PDC)	216	9.8	341	-
	LAST	5	Reed	RSX272 (PDC)	216	5.3	112	3-1-BU-A-I-X-WT/CT-PR

SURVEYS:

MD (m)	INC (°)	AZIM (°T)	CLOSURE (m)	DIRECTION (°)
2786.73	0.87	334.96		
2873.56	0.47	315.46		
2960.21	0.37	282.26	39	328

PREVIOUS 24 HOURS OPERATIONS SUMMARY:
CONTINUE TO PULL OUT OF HOLE FROM 495m TO SURFACE. MAKE UP NEW PDC BIT AND BOTTOM HOLE ASSEMBLY WITH MWD TOOLS. RUN IN HOLE TO BOTTOM, DRILL AHEAD IN THE BELFAST MUDSTONE FROM 2662m TO 3003m AT 24:00HRS.

00:00 – 06:00 HOURS 01/11/04:
DRILL AHEAD FROM 3003m TO 3052m IN THE BELFAST MUDSTONE.

NOTE: GRADUALLY INCREASE MUD WEIGHT FROM 1.14SG (9.5PPG) TO 1.296SG (10.8PPG). MUD WEIGHT PLANNED TO BE 1.38SG (11.5PPG) PRIOR TO PENETRATING TARGET AT 3260m.

ANTICIPATED OPERATIONS:
DRILL 216mm (8.5") HOLE.

MWD OFFSETS FROM BIT:
RESISTIVITY=3.95m, ANNULAR PRESSURE=4.48m, GAMMA RAY=7.3m, SURVEYS=13.8m

Santos

A.C.N. 007 550 923

WELL PROGRESS REPORT

CALLISTER 1

DATE: 01/11/04

REPORT NO: 19

FORMATION TOPS: (Preliminary Field Picks)	MD RT	Subsea	H/L to Prognosis	H/L to Bridge-water Bay 1

HYDROCARBON SHOW SUMMARY		
INTERVAL	**LITHOLOGY**	**GAS**
	No shows	

GEOLOGICAL SUMMARY		
INTERVAL ROP (m/hr)	**LITHOLOGY**	**GAS**
2662-2742m ROP: 16-53 Ave: 38	MASSIVE SILTSTONE SILTSTONE: Medium to dark grey, grey brown, dominantly medium grey, slightly calcareous, argillaceous grading to Claystone in part, slightly arenaceous, trace to locally common carbonaceous specks, rare pyrite, firm to moderately hard, occasionally soft, subblocky.	1 to 24 units 95/3/1/1/0 % CO2: 400 ppm BG
2742-2830m ROP: 14-58 Ave: 37	MASSIVE SILTSTONE SILTSTONE: Medium grey to grey, minor dark medium grey, minor calcareous, argillaceous, slightly arenaceous, common carbonaceous specks, trace glauconite, trace dark brown limestone fragments, soft to firm, minor moderately hard, subblocky.	7 to 32 units 95/3/1/1/0 % CO2: 400 ppm BG
2830-2920m ROP: 19-67 Ave: 39	MASSIVE SILTSTONE SILTSTONE: Medium grey, dark grey, olive grey, minor brown grey, argillaceous, common carbonaceous specks, trace dark brown limestone fragments, soft to firm, minor moderately hard, subblocky to amorphous in part.	2 – 30 units 94/3/2/1 % CO2: 400 ppm BG

Santos

A.C.N. 007 550 923

WELL PROGRESS REPORT

CALLISTER 1

DATE: 01/11/04

REPORT NO: 19

GEOLOGICAL SUMMARY		
INTERVAL ROP (m/hr)	**LITHOLOGY**	**GAS**
2920-3035m ROP: 10-59 Ave: 34	MASSIVE SILTSTONE SILTSTONE: Medium grey, dark grey, olive grey, argillaceous, common carbonaceous specks, trace dark brown limestone fragments, soft to firm, minor moderately hard, sub blocky to amorphous in part.	4 – 43 units 92/4/3/1 % CO2: 400 ppm BG

Santos

A.C.N. 007 550 923

WELL PROGRESS REPORT

CALLISTER 1

DATE: 02/11/04

REPORT NO: 20

(As at 2400 hours 01/11/04) **DEPTH :** 3400 m **PROGRESS:** 397 m **DAYS FROM SPUD :** 19.5

OPERATION: DRILLING 216mm (8.5") HOLE

(As at 0600 hours 02/11/04) **DEPTH :** 3489 m **PROGRESS 0600-0600 hrs:** 437 m

OPERATION : DRILLING 216mm (8.5") HOLE AT 15 M/HR

AFE COST **CUMULATIVE COST**

244mm (9 5/8") CASING DEPTH: 2538m

RIG: JACK BATES
RT – SEAFLOOR: 158.4 m

PROGRAMMED TD: 3629m **ROTARY TABLE:** 29m LAT **WATER DEPTH:** 129.4 m

MUD DATA (2400 Hours)	Mud Type:	Wt: SG	Vis:	FL:	pH:	KCl%	Cl :	PV/YP:	Rmf:
	KCL / PHPA	1.38	58	4.2	9.4	8.0	45000	19 / 33	0.1012 @ 19.5°C

BIT DATA (2400 Hours)		No.	Make	Type	Size (mm)	Hours	Drilled	Condition
	PRESENT	6	Reed	DSX104 (PDC)	216	25.1	738	-
	LAST	5	Reed	RSX272 (PDC)	216	5.3	112	3-1-BU-A-I-X-WT/CT-PR

SURVEYS:

MD (m)	INC (°)	AZIM (°T)	CLOSURE (m)	DIRECTION (°)
3386.78	1.69	213.08		
3414.60	1.67	214.65		
3473.12	2.20	213.29	37	315

PREVIOUS 24 HOURS OPERATIONS SUMMARY:
DRILL AHEAD FROM 3003m TO 3400m. GRADUALLY INCREASE MUD WEIGHT FROM 1.14SG (9.5PPG) TO 1.38SG (11.5PPG) BY 3150m.

00:00 – 06:00 HOURS 02/11/04:
DRILL AHEAD FROM 3400m TO 3489m.

ANTICIPATED OPERATIONS:
DRILL 216mm (8.5") HOLE TO TOTAL DEPTH.

MWD OFFSETS FROM BIT:
RESISTIVITY=3.95m, ANNULAR PRESSURE=4.48m, GAMMA RAY=7.3m, SURVEYS=13.8m

Santos

A.C.N. 007 550 923

WELL PROGRESS REPORT

CALLISTER 1

DATE: 02/11/04

REPORT NO: 20

FORMATION TOPS: (Preliminary Field Picks)	MD RT	Subsea	H/L to Prognosis	H/L to Bridge-water Bay 1

HYDROCARBON SHOW SUMMARY		
INTERVAL	**LITHOLOGY**	**GAS**
3468-3479 ROP: 17-46 Ave:28	SANDSTONE: White to very light grey, dominantly medium grained, common coarse grained, moderately well sorted, dominantly subangular, subrounded in part, trace to locally common moderately strong siliceous cement, trace to common white argillaceous matrix, friable to moderately hard, poor visual porosity, poor to fair inferred porosity, common mineral fluorescence, no hydrocarbon fluorescence.	43 - 292 units 96/3/1/trace/trace % Peak: 292 / 35 units CO2: 430 ppm BG

GEOLOGICAL SUMMARY		
INTERVAL ROP (m/hr)	**LITHOLOGY**	**GAS**
3035-3116m ROP: 16-46 Ave: 34	MASSIVE SILTSTONE SILTSTONE: Medium to dark grey, olive brown, olive grey, argillaceous, grading to Claystone, arenaceous in part, common carbonaceous specks, trace dark brown dolomite fragments, trace calcareous grains, soft to firm, minor moderately hard, trace glauconite, trace loose quartz grains, sub blocky.	1 – 36 units 88/4/4/2/2 % CO2: 445 ppm BG

Santos

A.C.N. 007 550 923

WELL PROGRESS REPORT

CALLISTER 1

DATE: 02/11/04

REPORT NO: 20

GEOLOGICAL SUMMARY		
INTERVAL ROP (m/hr)	**LITHOLOGY**	**GAS**
3116-3141m ROP: 14-63 Ave: 34	MASSIVE SILTSTONE INTERBEDDED WITH MINOR SANDSTONE SILTSTONE: Dark grey to dark brown, very argillaceous, grading to Claystone in part, arenaceous in part, slightly calcareous, common black carbonaceous specks, rare quartz grains, trace light grey calcareous grains, trace brown dolomite grains, trace mica, rare glauconite, soft to firm, sub blocky. SANDSTONE: Medium grey to brownish grey, very fine, well sorted, subangular to subrounded, common siliceous cement, common light grey argillaceous matrix, common carbonaceous specks, trace micro mica, moderately hard to hard, poor visual porosity, no shows.	3 – 60 units 87/5/5/2/1 % CO2: 445 ppm BG
3141 – 3200m ROP: 15-65 Ave: 25	MASSIVE SILTSTONE INTERBEDDED WITH THIN SANDSTONES SILTSTONE: Grey to medium grey, occasional dark grey, brownish grey in part, argillaceous, slightly arenaceous, grading to Sandstone, trace glauconite, trace coarse and very coarse loose quartz, common carbonaceous specks and micro laminations, trace calcite grains, firm to moderately hard, subblocky SANDSTONE: Light grey, very light grey, very fine grained, generally well sorted, subangular to dominantly subrounded, common moderately strong siliceous cement, common light grey argillaceous matrix, common carbonaceous specks, moderately hard to hard, poor visual porosity, no shows.	24 – 61 units 87/5/5/2/1 % CO2: 450 ppm BG
3200-3320m ROP: 14-65 Ave: 29	MASSIVE SILTSTONE WITH MINOR SANDSTONE SILTSTONE: Grey to medium grey, occasional dark grey, brownish grey in part, argillaceous, slightly arenaceous, grading to very fine Sandstone, trace glauconite, trace coarse to very coarse loose quartz, common carbonaceous specks and micro laminations, trace calcite, firm to moderately hard, subblocky SANDSTONE: Medium grey to olive grey, very fine grained, generally well sorted, subangular to subrounded, common moderately strong siliceous cement, common light grey argillaceous matrix, common carbonaceous specks, moderately hard to hard, poor visual porosity, no shows.	2 – 56 units 88/5/5/1/1 % CO2: 455 ppm BG
3320-3428 ROP: 9-42 Ave: 24	SILTSTONE WITH MINOR SANDSTONE SILTSTONE: Light to medium grey, argillaceous in part, arenaceous in part, grades to very fine Sandstone in part, trace carbonaceous specks and micro-laminations, trace coarse loose quartz, firm to moderately hard, subblocky. SANDSTONE: (Trace) Medium to dark grey, occasionally light grey, generally very fine grained, grading to arenaceous Siltstone, trace calcareous grains, trace glauconite, trace to common carbonaceous specks, firm to moderately hard, poor visual and inferred porosity, no fluorescence.	14 - 43 units 88/5/4/2/1 % CO2: 440 ppm BG

Santos

A.C.N. 007 550 923

WELL PROGRESS REPORT

CALLISTER 1

DATE: 02/11/04

REPORT NO: 20

GEOLOGICAL SUMMARY		
INTERVAL ROP (m/hr)	**LITHOLOGY**	**GAS**
3428-3453 ROP: 13-51 Ave: 26	SANDSTONE WITH MINOR SILTSTONE SANDSTONE: Light to very light grey, very fine to fine grained on top of unit with minor medium, becoming more fine to medium towards the bottom half of unit, with trace coarse to very coarse loose grains, generally well sorted on top of unit, becoming poorly sorted with depth, subangular to subrounded, common strong siliceous cement, common argillaceous and silty matrix, trace to locally common carbonaceous specks, moderately hard to hard, friable in part, poor visual porosity, common brown yellow mineral fluorescence, rare to trace moderately bright yellow fluorescence, slow yellow crush cut, faint yellow ring residue. SILTSTONE: Brown to dark grey, argillaceous, arenaceous in part, grading to a very fine Sandstone, trace carbonaceous specks and micro-laminations, slightly micromicaceous, rare pyrite, firm to moderately hard, sub blocky.	15 - 58 units 92/4/3/1/trace % CO2: 430 ppm BG
3453-3468 ROP: 12-46 Ave: 21	SILTSTONE: Brown to dark grey, argillaceous, arenaceous in part, grading to a very fine Sandstone, trace carbonaceous specks and micro-laminations, slightly micromicaceous, rare pyrite, firm to moderately hard, sub blocky.	37 - 61 units 93/4/2/1/trace % CO2: 430 ppm BG
3468-3479 ROP: 17-46 Ave:28	SANDSTONE: White to very light grey, dominantly medium grained, common coarse grained, moderately well sorted, dominantly subangular, subrounded in part, trace to locally common moderately strong siliceous cement, trace to common white argillaceous matrix, friable to moderately hard, poor visual porosity, poor to fair inferred porosity, common mineral fluorescence, no hydrocarbon fluorescence.	43 - 292 units 96/3/1/trace/trace % CO2: 430 ppm BG

Santos

A.C.N. 007 550 923

WELL PROGRESS REPORT

CALLISTER 1

DATE: 03/11/04

REPORT NO: 21

(As at 2400 hours 02/11/04) **DEPTH :** 3630 m **PROGRESS:** 230 m **DAYS FROM SPUD :** 20.5

OPERATION: PICKING UP ADDITIONAL DRILLPIPE PRIOR TO DRILLING AHEAD.

(As at 0600 hours 03/11/04) **DEPTH :** 3658 m **PROGRESS 0600-0600 hrs:** 169 m

OPERATION : DRILLING 216mm (8.5") HOLE AT 10 M/HR

AFE COST **CUMULATIVE COST**

244mm (9 5/8") CASING DEPTH: 2538m **RIG: JACK BATES**

RT – SEAFLOOR: 158.4 m

PROGRAMMED TD: 3629m **ROTARY TABLE:** 29m LAT **WATER DEPTH:** 129.4 m

MUD DATA (2400 Hours)	Mud Type:	Wt: SG	Vis:	FL:	pH:	KCl%	Cl :	PV/YP:	Rmf:
	KCL / PHPA	1.44	55	5.0	8.7	9.8	52000	22 / 30	0.1158 @ 19.7°C

BIT DATA (2400 Hours)		No.	Make	Type	Size (mm)	Hours	Drilled	Condition
	PRESENT	6	Reed	DSX104 (PDC)	216	38.3	969	-
	LAST	5	Reed	RSX272 (PDC)	216	5.3	112	3-1-BU-A-I-X-WT/CT-PR

SURVEYS:

MD (m)	INC (°)	AZIM (°T)	CLOSURE (m)	DIRECTION (°)
3557.20	2.26	215.08		
3586.67	2.18	216.17		
3614.64	1.49	198.26	36.11	306.85

PREVIOUS 24 HOURS OPERATIONS SUMMARY:
DRILL AHEAD FROM 3400m TO 3631m WHILE INCREASING MUD WEIGHT FROM 1.38SG (11.5PPG) TO 1.44SG (12.0PPG) TO CONTAIN HIGH GAS LEVELS. PULL OUT OF HOLE 6 STANDS, PICKUP ADDITIONAL DRILLPIPE & RUN IN HOLE. CIRCULATE BOTTOMS UP (GAS=1200 UNITS).

00:00 – 06:00 HOURS 03/11/04:
CONTINUE TO PICKUP ADDITIONAL DRILLPIPE TO ENABLE DRILLING TO REVISED TOTAL DEPTH OF 3950m. DRILL AHEAD FROM 3631m TO 3658m AT 06:00 HRS.

ANTICIPATED OPERATIONS:
DRILL 216mm (8.5") HOLE TO TOTAL DEPTH (APPROX. 3950m)

MWD OFFSETS FROM BIT:
RESISTIVITY=3.95m, ANNULAR PRESSURE=4.48m, GAMMA RAY=7.3m, SURVEYS=13.8m

Santos

A.C.N. 007 550 923

WELL PROGRESS REPORT

CALLISTER 1

DATE: 03/11/04

REPORT NO: 21

FORMATION TOPS: (Preliminary Field Picks)	MD RT	Subsea	H/L to Prognosis	H/L to Bridge-water Bay 1

HYDROCARBON SHOW SUMMARY		
INTERVAL	**LITHOLOGY**	**GAS**
3478-3570m ROP: 7-66 Ave: 18 **(Several thin sands in this Interval)**	INTERBEDDED THIN SANDSTONES AND SILTSTONE SANDSTONE: White to very light grey, very fine to fine, minor medium and coarse, moderate sorting, subangular to subrounded, weak to moderately strong siliceous cement, trace to common white argillaceous matrix, friable to moderately hard, occasionally hard, poor visual porosity, common mineral fluorescence, no hydrocarbon fluorescence.	107 – 260 / 100 units 96/3/1/trace/trace %

Santos

A.C.N. 007 550 923

WELL PROGRESS REPORT

CALLISTER 1

DATE: 03/11/04

REPORT NO: 21

GEOLOGICAL SUMMARY		
INTERVAL ROP (m/hr)	**LITHOLOGY**	**GAS**
3478-3570m ROP: 7-66 Ave: 18	INTERBEDDED SANDSTONE AND SILTSTONE SANDSTONE: White to very light grey, very fine to fine, minor medium and coarse, moderate sorting, subangular to subrounded, weak to moderately strong siliceous cement, trace to common white argillaceous matrix, friable to moderately hard, occasionally hard, poor visual porosity, common mineral fluorescence, no hydrocarbon fluorescence. SILTSTONE: Medium to dark grey, argillaceous in part, arenaceous, grading to fine Sandstone in part, trace carbonaceous specks and laminations, soft and sticky in part, firm to occasionally hard, subblocky	107 – 260 units 96/3/1/trace/trace %
3570-3650 ROP: 8-37 Ave: 20	INTERBEDDED SILTSTONE AND SANDSTONE SILTSTONE: Medium dark grey to brownish grey, argillaceous in parts, arenaceous, grading to fine Sandstone, slightly calcareous, trace carbonaceous specks and laminations, soft and sticky in part, firm to minor hard, subblocky SANDSTONE: Very light grey to medium grey, fine to medium, moderately sorted, sub angular to sub rounded, strong siliceous cement, very common strong calcareous cement, slightly to very calcareous, trace white argillaceous matrix, trace glauconite, friable to moderately hard, common very hard, poor to tight visual porosity, no fluorescence.	116 – 201 units 96/3/1/trace/trace %

Santos

A.C.N. 007 550 923

WELL PROGRESS REPORT

CALLISTER 1

DATE: 04/11/04

REPORT NO: 22

(As at 2400 hours 03/11/04) **DEPTH :** 3833 m **PROGRESS:** 203 m **DAYS FROM SPUD :** 21.5

OPERATION: DRILLING 216mm HOLE AT 10-15 M/HR

(As at 0600 hours 04/11/04) **DEPTH :** 3892 m **PROGRESS 0600-0600 hrs:** 234 m

OPERATION : DRILLING 216mm (8.5") HOLE AT 15-20 M/HR

AFE COST **CUMULATIVE COST**

244mm (9 5/8") CASING DEPTH: 2538m

RIG: JACK BATES
RT – SEAFLOOR: 158.4 m

PROGRAMMED TD: 3629m **ROTARY TABLE:** 29m LAT **WATER DEPTH:** 129.4 m

MUD DATA (2400 Hours)	Mud Type:	Wt: SG	Vis:	FL:	pH:	KCl%	Cl :	PV/YP:	Rmf:
	KCL / PHPA	1.54	55	5.9	8.9	8.0	51000	23 / 32	0.0951 @ 19.0°C

BIT DATA (2400 Hours)		No.	Make	Type	Size (mm)	Hours	Drilled	Condition
	PRESENT	6	Reed	DSX104 (PDC)	216	53.5	1172	-
	LAST	5	Reed	RSX272 (PDC)	216	5.3	112	3-1-BU-A-I-X-WT/CT-PR

SURVEYS:

MD (m)	INC (°)	AZIM (°T)	CLOSURE (m)	DIRECTION (°)
3587	2.2	216		
3701	2.2	213		
3787	2.5	209	36	296

PREVIOUS 24 HOURS OPERATIONS SUMMARY:
CONTINUE TO PICKUP ADDITIONAL DRILLPIPE. DRILL AHEAD 216mm (8.5") FROM 3631m TO 3833m INCREASING MUD WEIGHT GRADUALLY FROM 1.44SG (12.0PPG) TO 1.54SG (12.8PPG).

00:00 – 06:00 HOURS 04/11/04:
DRILL 216mm (8.5") HOLE FROM 3833m TO 3892m INCREASING MUD WEIGHT FROM 1.54SG (12.8PPG) TO 1.56SG (13.0PPG) TO CONTROL HIGH CONNECTION GAS (CONNECTION GAS BETWEEN 400 – 700 UNITS).

ANTICIPATED OPERATIONS:
DRILL 216mm (8.5") HOLE TO TOTAL DEPTH (APPROX. 3950m). CIRCULATE BOTTOMS UP. PERFORM WIPER TRIP TO 244mm (9 5/8") CASING SHOE AND BACK TO BOTTOM. CIRCULATE AND CONDITION MUD. PULL OUT OF HOLE TO RUN ELECTRIC LOGS.

MWD OFFSETS FROM BIT:
RESISTIVITY=3.95m, ANNULAR PRESSURE=4.48m, GAMMA RAY=7.3m, SURVEYS=13.8m

Santos

A.C.N. 007 550 923

WELL PROGRESS REPORT

CALLISTER 1

DATE: 04/11/04

REPORT NO: 22

FORMATION TOPS: (Preliminary Field Picks)	MD RT	Subsea	H/L to Prognosis	H/L to Bridge-water Bay 1

HYDROCARBON SHOW SUMMARY		
INTERVAL	**LITHOLOGY** No shows	**GAS**

GEOLOGICAL SUMMARY		
INTERVAL ROP (m/hr)	**LITHOLOGY**	**GAS**
3650-3700 ROP: 8-29 Ave: 18	INTERBEDDED SILTSTONE AND MINOR SANDSTONE SILTSTONE: Medium dark grey to brownish grey, argillaceous in part, arenaceous in part, trace to locally common carbonaceous specks and micro-laminations, minor Coal fragments, moderately hard to hard, sub blocky. SANDSTONE: Light grey, white in part, very fine to fine grained quartz, occasionally medium, moderately well sorted, subangular to occasionally subrounded, common moderately strong siliceous cement, trace calcareous cement, common white argillaceous matrix, trace lithic fragments, moderately hard to friable in part, poor to tight visual porosity, no fluorescence.	80 – 164 units 98/2/trace/trace/trace % CO2: 1453ppm BG

Santos

A.C.N. 007 550 923

WELL PROGRESS REPORT

CALLISTER 1

DATE: 04/11/04

REPORT NO: 22

GEOLOGICAL SUMMARY		
INTERVAL ROP (m/hr)	**LITHOLOGY**	**GAS**
3700-3750m ROP: 3-20 Ave:13	INTERBEDDED SANDSTONE AND SILTSTONE SANDSTONE: Light grey, fine to very fine grained quartz, minor medium grained, moderately well sorted, subangular, common moderately strong siliceous cement, common white argillaceous matrix, moderately hard to hard, minor friable, poor to tight visual porosity, no shows. SILTSTONE: Medium to dark grey, brownish grey, argillaceous, arenaceous in part, trace carbonaceous specks, trace Coal fragments, trace carbonaceous micro-laminations, moderately hard to hard, sub blocky.	80 – 174 units 98/2/trace/trace % CO2: 660 ppm BG
3750-3812m ROP: 2-40 Ave:17	INTERBEDDED SILTSTONE AND SANDSTONE SILTSTONE: Medium to dark grey, brownish grey, argillaceous, arenaceous in part, trace carbonaceous specks, trace Coal fragments, trace carbonaceous micro-laminations, moderately hard to hard, sub blocky. SANDSTONE: Light grey to medium grey, dark grey in part, very fine to dominantly fine grained quartz, trace medium grained, moderately well sorted, subangular to subrounded, common siliceous cement, common white calcareous matrix, moderately hard to hard, poor to tight visual porosity, no shows.	39 – 79 units 97/2/1/trace/trace % CO2: 440 ppm BG
3812-3845m ROP: 7-38 Ave:17	SILTSTONE WITH MINOR SANDSTONE SILTSTONE: Medium to dark grey, dark olive grey, arenaceous to argillaceous, weakly calcareous, trace to locally common carbonaceous specks, trace micromicaceous, moderately hard to hard, subblocky to blocky. SANDSTONE: Light olive to light grey, minor medium grey, very fine to fine grained quartz, minor medium grained quartz, poor to moderately sorted, subangular to subrounded, minor moderately strong calcareous cement, common siliceous matrix, in part grading to an Arenaceous Siltstone, trace carbonaceous specks, trace micromicaceous, trace lithic fragments, friable to moderately hard, poor to tight inferred and visual porosity, no shows.	65 – 117 units 97/2/1/trace/trace % CO2: 560 ppm BG

Santos

A.C.N. 007 550 923

WELL PROGRESS REPORT

CALLISTER 1

DATE: 04/11/04

REPORT NO: 22

GEOLOGICAL SUMMARY		
INTERVAL ROP (m/hr)	**LITHOLOGY**	**GAS**
3845-3857m ROP: 10-28 Ave: 22	SANDSTONE WITH MINOR SILTSTONE INTERBEDS SILTSTONE: Medium to light olive grey, medium blue grey, arenaceous to argillaceous, weakly calcareous, trace to in part common carbonaceous specks and micro laminations, trace micromicaceous, firm to moderately hard, subblocky to blocky. SANDSTONE: Light olive grey, minor medium grey, clear to translucent, very fine to fine grained quartz, minor medium grained quartz, poor to moderately sorted, subangular to subrounded, moderately strong calcareous cement, common siliceous matrix, in part grading to an Arenaceous Siltstone, trace carbonaceous specks, trace micromicaceous, trace lithic fragments (0.5%), generally loose, friable to moderately hard aggregates, poor to tight inferred and visual porosity, no shows.	72 – 88 units 94/3/2/1/trace % CO2: 480 ppm BG
3857-3892m ROP: 7-27 Ave: 14	INTERBEDDED SILTSTONE AND SANDSTONE SILTSTONE: Medium to medium dark grey, brown grey, medium blue grey, in part light olive grey to olive grey, arenaceous to argillaceous, non to weakly calcareous, trace to common carbonaceous specks and micro laminations, trace micromicaceous, firm to moderately hard, subblocky to blocky. SANDSTONE: Light olive grey to light grey, clear to translucent, very fine to fine grained quartz, minor medium grained quartz, moderately sorted, subangular to subrounded, moderately strong to strong calcareous cement, common light grey to white argillaceous and siliceous matrix, in part grading to Arenaceous Siltstone, trace carbonaceous specks, trace micromicaceous, trace lithic grains (0.5%), moderately hard to very hard aggregates, poor to dominantly tight visual porosity, no shows.	46 – 93 units 94/3/2/1/trace % CO2: 500 ppm BG

Santos

A.C.N. 007 550 923

WELL PROGRESS REPORT

CALLISTER 1

DATE: 05/11/04

REPORT NO: 23

(As at 2400 hours 04/11/04) **DEPTH :** 3914 m (TD) **PROGRESS:** 81 m **DAYS FROM SPUD :** 22.5

OPERATION: CIRCULATE & INCREASE MUD WEIGHT FROM 1.66SG (13.9PPG) TO 1.69SG (14.1PPG)

(As at 0600 hours 05/11/04) **DEPTH :** 3914 m (TD) **PROGRESS 0600-0600 hrs:** 22 m

OPERATION : PULLING OUT OF HOLE TO RUN WIRELINE LOGS (BIT @ 1809m AT 06:00 HRS)

AFE COST **CUMULATIVE COST**

244mm (9 5/8") CASING DEPTH: 2538m

RIG: JACK BATES
RT – SEAFLOOR: 158.4 m

PROGRAMMED TD: 3629m **ROTARY TABLE:** 29m LAT **WATER DEPTH:** 129.4 m

MUD DATA (2400 Hours)	Mud Type:	Wt: SG	Vis:	FL:	pH:	KCl%	Cl :	PV/YP:	Rmf:
	KCL / PHPA	1.67	57	4.8	9.4	9.0	51000	58 / 36	0.0958 @ 20.4°C

BIT DATA (2400 Hours)		No.	Make	Type	Size (mm)	Hours	Drilled	Condition
	PRESENT	6	Reed	DSX104 (PDC)	216	60.1	1252	-
	LAST	5	Reed	RSX272 (PDC)	216	5.3	112	3-1-BU-A-I-X-WT/CT-PR

SURVEYS:	MD (m)	INC (°)	AZIM (°T)	CLOSURE (m)	DIRECTION (°)
	3787.16	2.50	209.01		
	3898.83	2.70	196.27		
(Projected to TD)	3914.00	2.70	196.27	36	287

PREVIOUS 24 HOURS OPERATIONS SUMMARY:
DRILL 216mm (8.5") HOLE FROM 3833m TO 3914m, INCREASING MUD WEIGHT FROM 1.54SG (12.8PPG) TO 1.56SG (13.0PPG) TO CONTROL HIGH GAS. REACH TOTAL DEPTH OF 3914m AT 09:00 HRS ON 04-11-04. CIRCULATE BOTTOMS UP WHILE INCREASING MUD WEIGHT FURTHER FROM 1.56SG (13.0PPG) TO 1.63SG (13.9PPG) TO CONTROL HIGH GAS. FLOW CHECK WELL – WELL STATIC. PULL OUT OF HOLE FROM 3914m TO 3634m – RECORDED 0.35M3 (2.2 BBL) GAIN. RUN IN HOLE FROM 3634m TO 3914m, CIRCULATE AND WEIGHT UP MUD FROM 1.66SG (13.9PPG) TO 1.69SG (14.1PPG).

00:00 – 06:00 HOURS 05/11/04:
CONTINUE TO CIRCULATE AND WEIGHT UP MUD TO 1.69SG (14.1PPG). FLOW CHECK & PULL OUT OF HOLE TO RUN WIRELINE LOGS.

ANTICIPATED OPERATIONS:
RUN WIRELINE LOGS AS PER PROGRAM.

Santos

A.C.N. 007 550 923

WELL PROGRESS REPORT

CALLISTER 1

DATE: 05/11/04

REPORT NO: 23

FORMATION TOPS: (Preliminary Field Picks)	MD RT	Subsea	H/L to Prognosis	H/L to Bridge-water Bay 1

HYDROCARBON SHOW SUMMARY		
INTERVAL	**LITHOLOGY** No shows	**GAS**

GEOLOGICAL SUMMARY		
INTERVAL ROP (m/hr)	**LITHOLOGY**	**GAS**
3892-3914m ROP: 6-24 Ave: 13	INTERBEDDED SILTSTONE AND SANDSTONE SILTSTONE: Medium to medium dark grey, brown grey, medium blue grey, in part light olive grey, olive grey, arenaceous to argillaceous, slightly calcareous in part, trace to common carbonaceous specks and micro laminations, trace micromicaceous, firm to moderately hard, subblocky to blocky. SANDSTONE: White to light grey, occasionally light brown, very fine to fine grained quartz, minor medium grained quartz, poorly sorted, subangular to subrounded, common moderately strong to strong calcareous cement, common light grey to white argillaceous and siliceous matrix, trace micromicaceous, trace carbonaceous specks, trace lithic grains (<0.5%), moderately hard to hard aggregates, occasional friable aggregates, poor to dominantly tight visual porosity, no shows.	49 – 74 units 93/3/2/1/1 % CO_2: 710 ppm BG

Santos

A.C.N. 007 550 923

WELL PROGRESS REPORT

CALLISTER 1

DATE: 06/11/04

REPORT NO: 24

(As at 2400 hours 05/11/04) **DEPTH :** 3914 m (TD) **PROGRESS:** 0 m **DAYS FROM SPUD :** 23.5

OPERATION: PULLING OUT OF HOLE WITH SUITE 2 / RUN 1 (TRIPLE COMBO).

(As at 0600 hours 06/11/04) **DEPTH :** 3914 m (TD) **PROGRESS 0600-0600 hrs:** 0 m

OPERATION : RUNNING IN HOLE ON WIPER TRIP, CURRENTLY @ 485m.

AFE COST **CUMULATIVE COST**

244mm (9 5/8") CASING DEPTH: 2538m **RIG: JACK BATES**
RT – SEAFLOOR: 158.4 m

PROGRAMMED TD: 3629m **ROTARY TABLE:** 29m LAT **WATER DEPTH:** 129.4 m

MUD DATA (2400 Hours)	Mud Type:	Wt: SG	Vis:	FL:	pH:	KCl%	Cl :	PV/YP:	
	KCL / PHPA	1.69	57	5.0	9.4	9.0	50000	56 / 38	Rmf: 0.083 @ 25degC Rm: 0.130 @ 26degC Rmc: 0.322 @ 24degC

BIT DATA (2400 Hours)		No.	Make	Type	Size (mm)	Hours	Drilled	Condition
	PRESENT	6	Reed	DSX104 (PDC)	216	60.1	1252	2-2-WT-A-X-I-CT-TD
	LAST	5	Reed	RSX272 (PDC)	216	5.3	112	3-1-BU-A-I-X-WT/CT-PR

SURVEYS:	MD (m)	INC (°)	AZIM (°T)	CLOSURE (m)	DIRECTION (°)
	3787.16	2.50	209.01		
	3898.83	2.70	196.27		
(Projected to TD)	3914.00	2.70	196.27	36	287

PREVIOUS 24 HOURS OPERATIONS SUMMARY:
CONTINUE TO CIRCULATE AND INCREASE MUD WEIGHT TO 1.69SG (14.1PPG). FLOW CHECK & PULL OUT OF HOLE TO RUN WIRELINE LOGS. LAYOUT MWD TOOLS & DOWNLOAD MEMORY DATA. RIG UP SCHLUMBERGER WIRELINE. STOP RIGGING UP WHILE TROUBLESHOOTING INFLUX IN TRIP TANK. IDENTIFY AND CORRECT SURFACE LEAK. CONTINUE RIGGING UP SCHLUMBERGER, RUN IN HOLE AND RECORD RUN 1: TRIPLE COMBO, PULLED TIGHT FROM 3150m TO 2650m. PULL OUT WITH RUN 1.

00:00 – 06:00 HOURS 06/11/04:
CONTINUE PULLING OUT OF HOLE WITH RUN 1. RIG DOWN SCHLUMBERGER. MAKE UP RE-RUN BIT AND WIPER TRIP BOTTOM HOLE ASSEMBLY. RUN IN HOLE ON WIPER TRIP TO 3914m PRIOR TO RUNNING MDT'S.

ANTICIPATED OPERATIONS:
WIPER TRIP TO 3914m, WASHING AND REAMING FROM 2650m TO 3150m. CONDUCT WIRELINE LOGGING RUN 2 (MDT-GR).

Santos

A.C.N. 007 550 923

WELL PROGRESS REPORT

CALLISTER 1

DATE: 07/11/04

REPORT NO: 25

(As at 2400 hours 06/11/04) **DEPTH :** 3914 m (TD) **PROGRESS:** 0 m **DAYS FROM SPUD :** 24.5

OPERATION: PULLING OUT OF HOLE TO CONDUCT MDT PRESSURE SURVEY.

(As at 0600 hours 07/11/04) **DEPTH :** 3914 m (TD) **PROGRESS 0600-0600 hrs:** 0 m

OPERATION : PULLING OUT OF HOLE TO CONDUCT MDT PRESSURE SURVEY (BIT @ 1564m)

AFE COST **CUMULATIVE COST**

244mm (9 5/8") CASING DEPTH: 2538m

RIG: JACK BATES
RT – SEAFLOOR: 158.4 m

PROGRAMMED TD: 3629m **ROTARY TABLE:** 29m LAT **WATER DEPTH:** 129.4 m

MUD DATA (2400 Hours)	Mud Type:	Wt: SG	Vis:	FL:	pH:	KCl%	Cl :	PV/YP:	Rmf: 0.083 @ 25degC
	KCL / PHPA	1.69	54	5.0	9.3	9.0	50000	55 / 30	Rm: 0.130 @ 26degC
									Rmc: 0.322 @ 24degC

BIT DATA (2400 Hours)		No.	Make	Type	Size (mm)	Hours	Drilled	Condition
	PRESENT							
	LAST	6	Reed	DSX104 (PDC)	216	60.1	1252	2-2-WT-A-X-I-CT-TD

SURVEYS:	MD (m)	INC (°)	AZIM (°T)	CLOSURE (m)	DIRECTION (°)
	3787.16	2.50	209.01		
	3898.83	2.70	196.27		
(Projected to TD)	3914.00	2.70	196.27	36	287

PREVIOUS 24 HOURS OPERATIONS SUMMARY:
CONTINUE PULLING OUT OF HOLE WITH RUN 1: TRIPLE COMBO. RIG DOWN SCHLUMBERGER WIRELINE. MAKE UP RE-RUN BIT AND SLICK BOTTOM HOLE ASSEMBLY. RUN IN HOLE TO 2700m ON WIPER TRIP PRIOR TO RUNNING MDT PRESSURE SURVEY. PRECAUTIONARY WASH FROM 2700m TO 3150m. NO TIGHT HOLE OBSERVED. RUN IN HOLE FROM 3100m TO 3914m – NO FILL AT BOTTOM. CIRCULATE AND CONDITION MUD TO 1.69SG (14.1PPG). FLOW CHECK AND PULL OUT OF HOLE TO CONDUCT MDT PRESSURE SURVEY.

00:00 – 06:00 HOURS 07/11/04:
PULL OUT OF HOLE TO RUN MDT PRESSURE SURVEY.

ANTICIPATED OPERATIONS:
RUN MDT PRESSURE SURVEY.

Santos

A.C.N. 007 550 923

WELL PROGRESS REPORT

CALLISTER 1

DATE: 08/11/04

REPORT NO: 26

(As at 2400 hours 07/11/04) **DEPTH :** 3914 m (TD) **PROGRESS:** 0 m **DAYS FROM SPUD :** 25.5

OPERATION: CONDUCTING MDT PRESSURE SURVEY AT 3445.8m.

(As at 0600 hours 08/11/04) **DEPTH :** 3914 m (TD) **PROGRESS 0600-0600 hrs:** 0 m

OPERATION : PULLING OUT OF HOLE WITH MDT-GR (RUN 3)

AFE COST **CUMULATIVE COST**

244mm (9 5/8") CASING DEPTH: 2538m **RIG: JACK BATES**
RT – SEAFLOOR: 158.4 m

PROGRAMMED TD: 3629m **ROTARY TABLE:** 29m LAT **WATER DEPTH:** 129.4 m

MUD DATA (2400 Hours)	Mud Type: KCL / PHPA	Wt: SG 1.69	Vis: 54	FL: 5.0	pH: 9.3	KCl% 9.0	Cl : 50000	PV/YP: 55 / 30	Rmf: 0.083 @ 25degC Rm: 0.130 @ 26degC Rmc: 0.322 @ 24degC

BIT DATA (2400 Hours)		No.	Make	Type	Size (mm)	Hours	Drilled	Condition
	PRESENT							
	LAST	6	Reed	DSX104 (PDC)	216	60.1	1252	2-2-WT-A-X-I-CT-TD

SURVEYS:	MD (m)	INC (°)	AZIM (°T)	CLOSURE (m)	DIRECTION (°)
	3787.16	2.50	209.01		
	3898.83	2.70	196.27		
(Projected to TD)	3914.00	2.70	196.27	36	287

PREVIOUS 24 HOURS OPERATIONS SUMMARY:
PULL OUT OF HOLE TO RUN MDT PRESSURE SURVEY. RIG UP SCHLUMBERGER WIRELINE AND RUN IN HOLE WITH MDT TOOLSTRING TO CASING SHOE. STABILISE TOOL AT CASING SHOE FOR 20 MINS. CONTINUE TO RUN IN HOLE. PERFORM CORRELATION PASS AT 3400m. COMMENCE FIRST PRE-TEST AT 3445.8m. CONDUCT 11 PRE-TESTS (8 NO SEAT, 1 TIGHT, 2 SHALE TEST). PULL OUT OF HOLE AFTER 3 UNSUCCESSFUL SEAL TEST. REPLACE MDT PACKER TO LARGER HOLE SIZE PACKER. TROUBLE SHOOT AND RECTIFY PROBLEM WITH TELEMETRIC POWER MODULE. RUN IN HOLE WITH MDT-GR (RUN 3) TOOLSTRING TO CASING SHOE. STABILISE AT CASING FOR 20 MINS. CONTINUE RUNNING IN HOLE. PERFORM CORRELATION PASS AT 3400m. COMMENCE FIRST PRE-TEST AT 3445.8m.

00:00 – 06:00 HOURS 08/11/04:
PERFORM MDT PRESSURE SURVEY. CONDUCTED 15 PRE-TESTS (12 NO SEAT, 2 TIGHT, 1 SHALE TEST). PULL OUT OF HOLE AND RIG DOWN MDT-GR (RUN 3).

ANTICIPATED OPERATIONS:
RIG UP AND RUN CMR (RUN 4).

Santos

A.C.N. 007 550 923

WELL PROGRESS REPORT

CALLISTER 1

DATE: 09/11/04

REPORT NO: 27

(As at 2400 hours 08/11/04) **DEPTH :** 3914 m (TD) **PROGRESS:** 0 m **DAYS FROM SPUD :** 26.5

OPERATION: RUNNING IN HOLE ON WIPER TRIP.

(As at 0600 hours 09/11/04) **DEPTH :** 3914 m (TD) **PROGRESS 0600-0600 hrs:** 0 m

OPERATION : CIRCULATE AND CONDITION MUD AT 3914m.

AFE COST **CUMULATIVE COST**

244mm (9 5/8") CASING DEPTH: 2538m **RIG: JACK BATES**
RT – SEAFLOOR: 158.4 m

PROGRAMMED TD: 3629m **ROTARY TABLE:** 29m LAT **WATER DEPTH:** 129.4 m

MUD DATA (2400 Hours)	Mud Type: KCL / PHPA	Wt: SG 1.69	Vis: 58	FL: 4.8	pH: 9.2	KCl% 9.0	Cl : 52000	PV/YP: 47 / 31	Rmf: 0.083 @ 25degC Rm: 0.130 @ 26degC Rmc: 0.322 @ 24degC

BIT DATA (2400 Hours)		No.	Make	Type	Size (mm)	Hours	Drilled	Condition
	PRESENT							
	LAST	6	Reed	DSX104 (PDC)	216	60.1	1252	2-2-WT-A-X-I-CT-TD

SURVEYS: (Projected to TD)	MD (m)	INC (°)	AZIM (°T)	CLOSURE (m)	DIRECTION (°)
	3914.00	2.70	196.27	36	287

PREVIOUS 24 HOURS OPERATIONS SUMMARY:
RIG DOWN MDT LOGGING TOOLS. RIG UP AND RUN IN HOLE WITH CMR (RUN 4). CORRELATE AND RECORD CMR LOG. PULL OUT OF HOLE. RIG DOWN CMR LOGGING TOOLS. RIG UP MSCT-GR (RUN 5). RUN IN HOLE WITH MSCT-GR TO 3117m. OBSERVE GAIN IN TRIP TANK, ABANDON MSCT-GR RUN AND PULL OUT OF HOLE TO INVESTIGATE GAIN IN TRIP TANK. RIG DOWN SCHLUMBERGER WIRELINE. MAKE UP RE-RUN BIT AND RUN IN HOLE WITH SLICK 216mm (8.5") BOTTOM HOLE ASSEMBLY TO 2220m.

00:00 – 06:00 HOURS 09/11/04:
CONTINUE RUNNING IN HOLE ON WIPER TRIP TO 3914m – NO FILL. CIRCULATE AT BOTTOM. CLOSE ANNULAR AND CIRCULATE THROUGH THE CHOKE PRIOR TO BOTTOMS UP. TRIP GAS - 722 UNITS. MUD WEIGHT DROPPED TO A MINIMUM OF 1.51SG (12.6PPG). ANALYSIS OF THE RETURNS MUD INDICATE CHLORIDES 33,000 FROM 1.63SG (13.6PPG) MUD; 52,000 FROM 1.69SG (14.1PPG) MUD; 35,000 FROM 1.51SG (12.6PPG) MUD SAMPLE. CIRCULATE AND CONDITION MUD TO 1.69SG (14.1PPG).

ANTICIPATED OPERATIONS:
CIRCULATE AND CONDITION MUD. PULL OUT OF HOLE TO CASING SHOE, SLIP AND CUT DRILLING LINE AT SHOE. RUN IN HOLE TO 3914m, CIRCULATE AND CONDITION MUD, PULL OUT OF HOLE. RIG UP SCHLUMBERGER AND RUN MSCT-GR (RUN5).

Santos

A.C.N. 007 550 923

WELL PROGRESS REPORT

CALLISTER 1

DATE: 10/11/04

REPORT NO: 28

(As at 2400 hours 09/11/04) **DEPTH :** 3914 m (TD) **PROGRESS:** 0 m **DAYS FROM SPUD :** 27.5

OPERATION: PULLING OUT OF HOLE TO RUN MSCT-GR (RUN 5).

(As at 0600 hours 10/11/04) **DEPTH :** 3914 m (TD) **PROGRESS 0600-0600 hrs:** 0 m

OPERATION : RUNNING MSCT-GR (CUT 2 OF 25 CORES).

AFE COST **CUMULATIVE COST**

244mm (9 5/8") CASING DEPTH: 2538m **RIG: JACK BATES**
RT – SEAFLOOR: 158.4 m

PROGRAMMED TD: 3629m **ROTARY TABLE:** 29m LAT **WATER DEPTH:** 129.4 m

MUD DATA (2400 Hours)	Mud Type:	Wt: SG	Vis:	FL:	pH:	KCl%	Cl :	PV/YP:	Rmf: 0.083 @ 25degC
	KCL / PHPA	1.69	60	6.2	8.8	9.0	45000	42 / 31	Rm: 0.130 @ 26degC
									Rmc: 0.322 @ 24degC

BIT DATA (2400 Hours)		No.	Make	Type	Size (mm)	Hours	Drilled	Condition
	PRESENT							
	LAST	6	Reed	DSX104 (PDC)	216	60.1	1252	2-2-WT-A-X-I-CT-TD

SURVEYS: (Projected to TD)	MD (m)	INC (°)	AZIM (°T)	CLOSURE (m)	DIRECTION (°)
	3914.00	2.70	196.27	36	287

PREVIOUS 24 HOURS OPERATIONS SUMMARY:
CONTINUE RUNNING IN HOLE ON WIPER TRIP TO 3914m – NO FILL. CIRCULATE AT BOTTOM. CLOSE ANNULAR AND CIRCULATE THROUGH THE CHOKE PRIOR TO BOTTOMS UP. TRIP GAS - 722 UNITS. MUD WEIGHT DROPPED TO A MINIMUM OF 1.51SG (12.6PPG). ANALYSIS OF THE RETURNS MUD INDICATE CHLORIDES 33,000 FROM 1.63SG (13.6PPG) MUD; 52,000 FROM 1.69SG (14.1PPG) MUD; 35,000 FROM 1.51SG (12.6PPG) MUD SAMPLE. CIRCULATE AND CONDITION MUD TO 1.69SG (14.1PPG). CIRCULATE AND CONDITION MUD TO 1.69SG (14.1PPG). PULL OUT OF HOLE TO CASING SHOE, SLIP AND CUT DRILLING LINE AT SHOE. RUN BACK IN HOLE TO BOTTOM ON WIPER TRIP, CIRCULATE & CONDITION MUD (TRIP GAS 530 UNITS). PULL OUT OF HOLE.

00:00 – 06:00 HOURS 10/11/04:
CONTINUE PULLING OUT OF HOLE. RIG UP SCHLUMBERGER WIRELINE AND RUN MSCT-GR (RUN 5 – ROTARY SIDEWALL CORES). CUT 2 OF 25 CORES AT 06:00HRS.

ANTICIPATED OPERATIONS:
CONTINUE WITH LOGGING PROGRAM – ROTARY SIDEWALL CORES, VSP CHECKSHOT SURVEY AND SIDEWALL CORES.

Santos

A.C.N. 007 550 923

WELL PROGRESS REPORT

CALLISTER 1

DATE: 11/11/04

REPORT NO: 29

(As at 2400 hours 10/11/04) **DEPTH :** 3914 m (TD) **PROGRESS:** 0 m **DAYS FROM SPUD :** 28.5

OPERATION: CONDUCTING CSI CHECKSHOT SURVEYS (RUN 6).

(As at 0600 hours 11/11/04) **DEPTH :** 3914 m (TD) **PROGRESS 0600-0600 hrs:** 0 m

OPERATION : RUNNING IN HOLE WITH STINGER TO SET ABANDONMENT PLUGS (AT 1500m @ 06:00HRS)

AFE COST **CUMULATIVE COST**

244mm (9 5/8") CASING DEPTH: 2538m **RIG: JACK BATES**
RT – SEAFLOOR: 158.4 m

PROGRAMMED TD: 3629m **ROTARY TABLE:** 29m LAT **WATER DEPTH:** 129.4 m

MUD DATA (2400 Hours)	Mud Type:	Wt: SG	Vis:	FL:	pH:	KCl%	Cl :	PV/YP:	Rmf: 0.083 @ 25degC
	KCL / PHPA	1.69	60	6.2	8.8	9.0	45000	43 / 30	Rm: 0.130 @ 26degC
									Rmc: 0.322 @ 24degC

BIT DATA (2400 Hours)		No.	Make	Type	Size (mm)	Hours	Drilled	Condition
	PRESENT							
	LAST	6	Reed	DSX104 (PDC)	216	60.1	1252	2-2-WT-A-X-I-CT-TD

SURVEYS: (Projected to TD)	MD (m)	INC (°)	AZIM (°T)	CLOSURE (m)	DIRECTION (°)
	3914.00	2.70	196.27	36	287

PREVIOUS 24 HOURS OPERATIONS SUMMARY:
PULL OUT OF HOLE. RIG UP SCHLUMBERGER WIRELINE AND RUN MSCT-GR (RUN 5 – ROTARY SIDEWALL CORES). CUT 26 CORES (RECOVERED 11 GOOD CORES, 3 PARTIAL CORES, 12 MISSING – 53.8% RECOVERY). RIG DOWN MSCT-GR, RIG UP CSI SEISMIC CHECKSHOT SURVEY (RUN 6) AND RUN IN HOLE. CONDUCT CSI CHECKSHOT VELOCITY SURVEYS.

00:00 – 06:00 HOURS 11/11/04:
CONTINUE CSI SEISMIC CHECKSHOT VELOCITY SURVEY (50m INTERVAL) UNTIL LOSS OF SIGNAL AT 600m. PULL OUT OF HOLE AND RIG DOWN SCHLUMBERGER WIRELINE. PICK UP 249.7m OF 73mm (2 7/8") CEMENT STINGER AND RUN IN HOLE ON DRILL PIPE TO SET ABANDONMENT PLUGS.

ANTICIPATED OPERATIONS:
SET CEMENT ABANDONMENT PLUGS AS PER PROGRAM. PLUG #1: 3914-3714m, PLUG #2: 3714-3514m, PLUG #3: 3514-3314m, PLUG #4: 2568-2510m, PLUG #5: 2510-2455m, PLUG #6: 235-185m.

Santos

A.C.N. 007 550 923

WELL PROGRESS REPORT

CALLISTER 1

DATE: 12/11/04

REPORT NO: 30

(As at 2400 hours 11/11/04) **DEPTH :** 3914 m (TD) **PROGRESS:** 0 m **DAYS FROM SPUD :** 29.5

OPERATION: PULLING OUT OF HOLE AFTER SETTING ABANDONMENT PLUG #3.(3514m TO 3314m)

(As at 0600 hours 12/11/04) **DEPTH :** 3914 m (TD) **PROGRESS 0600-0600 hrs:** 0 m

OPERATION : PULLING OUT OF HOLE AT 821m TO PICK UP EZSV PACKER HAVING SET PLUG #3.

AFE COST **CUMULATIVE COST**

244mm (9 5/8") CASING DEPTH: 2538m **RIG: JACK BATES**
RT – SEAFLOOR: 158.4 m

PROGRAMMED TD: 3629m **ROTARY TABLE:** 29m LAT **WATER DEPTH:** 129.4 m

MUD DATA (2400 Hours)	Mud Type:	Wt: SG	Vis:	FL:	pH:	KCl%	Cl :	PV/YP:	Rmf: 0.083 @ 25degC
	KCL / PHPA	1.69	60	8.0	10.5	9.0	43000	36 / 31	Rm: 0.130 @ 26degC
									Rmc: 0.322 @ 24degC

BIT DATA (2400 Hours)		No.	Make	Type	Size (mm)	Hours	Drilled	Condition
	PRESENT							
	LAST	6	Reed	DSX104 (PDC)	216	60.1	1252	2-2-WT-A-X-I-CT-TD

SURVEYS: (Projected to TD)	MD (m)	INC (°)	AZIM (°T)	CLOSURE (m)	DIRECTION (°)
	3914.00	2.70	196.27	36	287

PREVIOUS 24 HOURS OPERATIONS SUMMARY:
CONTINUE CSI SEISMIC CHECKSHOT VELOCITY SURVEY (50m INTERVAL) UNTIL LOSS OF SIGNAL AT 600m. PULL OUT OF HOLE AND RIG DOWN SCHLUMBERGER WIRELINE. PICK UP 249.7m OF 73mm (2 7/8") CEMENT STINGER AND RUN IN HOLE ON DRILL PIPE TO SET ABANDONMENT PLUGS. CIRCULATE AND CONDITION MUD AT 3914m – 1300 UNITS OF TRIP GAS. MIX AND PUMP PLUG #1: 3914-3714m. PULL OUT OF HOLE FROM 3914m TO 3714m, CIRCULATE AND CONDITION MUD AT 3714m – 700 UNITS OF GAS. MIX AND PUMP PLUG #2: 3714-3514m. PULL OUT OF HOLE FROM 3714m TO 3514m. CIRCULATE AND CONDITION MUD AT 3514m – 760 UNITS OF GAS. MIX AND PUMP PLUG #3: 3514-3314m. PULL OUT OF HOLE TO PICK UP EZSV PACKER (CEMENT RETAINER PACKER).

00:00 – 06:00 HOURS 12/11/04:
CONTINUE PULLING OUT OF HOLE TO 3215m. CIRCULATE BOTTOMS UP. PULL OUT OF HOLE FROM 3215m TO 821m PICK UP EZSV PACKER.

ANTICIPATED OPERATIONS:
COMPLETE PULLING OUT OF HOLE WITH CEMENT STINGER. RUN IN HOLE WITH EZSV PACKER AND SET AT 2510m. SET CEMENT ABANDONMENT PLUGS AS PER PROGRAM. PLUG #4: 2568-2510m, PLUG #5: 2510-2455m, PLUG #6: 235-185m.

SECTION 6: DAILY DRILLING REPORTS

Santos

DRILLING MORNING REPORT # 1
CALLISTER 01 (08 Oct 2004)

From : B.Houston / D.Atkins

Well Data

Country	Australia	M. Depth	0m	Cur. Hole Size	0in	AFE Cost	
Field	Otway Basin	TVD	0m	Casing OD	0in	AFE No.	
Drill Co.	Transocean	Progress	0m	Shoe TVD	0m	Daily Cost	
Rig	Jack Bates	Days from spud		F.I.T. / L.O.T.	0ppg / 0ppg	Cum Cost	
Wtr Dpth(LAT)	125.0m	Days on well	1.00			Planned TD	3768.0m
RT-ASL(LAT)	29.0m	Current Op @ 0600					
RT-ML	154m	Planned Op					

Summary of Period 0000 to 2400 Hrs

Operations For Period 0000 Hrs to 2400 Hrs on 08 Oct 2004

Phse	Cls (RC)	Op	From	To	Hrs	Depth	Activity Description
			0000	1030	10.50	0m	On Standby at Thistle Island waiting for Pt Lincoln tug Rig crew: Prepare all sea fastenings for tow..
			1030	1430	4.00	0m	Anchor Operations: #4- Start @ 10:52hrs , Racked @ 11:28hrs (Lady Caroline) #8- Start @ 11:46hrs, Racked @ 12:15hrs (Lady Caroline) #1- Start @ 13:52hrs, Racked @ 14:04hrs (Jack Bates) #5- Start @ 14:04hrs, Racked @ 14:28hrs (Jack Bates) Continue with third party equipment installation
RM	P		1430	2400	9.50	0m	Rig Under Tow f/ Thistle Island to Callister #1 . Tow vessel- MV Lady Caroline 18:00hrs: Lat: 35*08,9' S Long: 136*19,1' E Dist Trav= 16Nm Dist to go= 349Nm Avg Speed= 4.6Kn ETA= 21:54hrs Monday 11th October 23:59hrs: Lat= 35*39,8' S Long= 136*20,4' E total Dist trav= 46.7Nm Dist to go = 302.3Nm Avg Speed= 5.11Kn ETA= 13:30hrs Monday 11th October

Operations For Period 0000 Hrs to 0600 Hrs on 09 Oct 2004

Phse	Cls (RC)	Op	From	To	Hrs	Depth	Activity Description
RM	P		0000	0600	6.00	0m	(IN PROGRESS) Rig under Tow to Callister 01 06:00hrs Lat= 36*10,5' S Long= 136*28,3' E Total dist trav = 78nm Dist to go= 270nm Avg speed= 5.38kn ETA=14:00hrs Monday 11th October 12:00hrs Lat: 36* 137,03" S Long: 137*03.0 E Dist Trav= 112nm Dist to go= 253nm Avg Speed= 5.2kn ETA= 13:00hrs Monday 11th 2004

Phse	Cls (RC)	Op	From	To	Hrs	Depth	Activity Description
							18:00hrs: Lat: 36*46" S Long: 137*, 39'.5" E Dist Trav= 147NM Dist to go= 218nm Avg Speed= 5.3kn ETA= 11:30hrs Monday 11th 2004 23:59hrs: Lat= 37*, 04.2" S Long= 138* 17.5" E total Dist trav= 182nm Dist to go = 183nm Avg Speed= 5.4 ETA= 10:12hrs Monday 11th 2004 Rig operations: General Housekeeping Pressure tested Choke and Kill manifold w/ Cement unit

Phase Data to 2400hrs, 08 Oct 2004

Phase	Phase Hrs	Start On	Finish On	Cum Hrs	Cum Days	Max Depth
RIG MOVE/RIG-UP(RM)	9.5	08 Oct 2004	08 Oct 2004	9.50	0.396 days	0m

Bulk Stocks

Name	Unit	In	Used	Adjust	Balance
Fuel	M3	0	0	0	0.0
Drill Water	MT	0	0	0	0.0
Potable Water	MT	0	0	0	0.0
Gel	MT	135	0	0	135.0
Cement	MT	160	0	0	160.0
Barite	MT	211	0	0	211.0
Base Olefin	bbl	0	0	0	0.0
HTB cement	ft3	0	0	0	0.0
SBM	bbl	0	0	0	0.0
PreMix SBM	bbl	0	0	0	0.0
Helifuel	Litres	0	0	0	0.0
KCl Brine	bbl	0	0	0	0.0
Mud	sx	0	0	0	0.0
SBM Dril-In	bbl	0	0	0	0.0

Casing

OD	L.O.T. / F.I.T.	Csg Shoe (MD/TVD)	Cementing
20 "	/	/	
13 3/8"	/	/	
9 5/8"	/	/	

HSE Summary

Events	Date of Last	Days Since	Remarks
Abandon Drill	08 Oct 2004	0 Days	Weekly abandon rig drill.
BOP Test		0 Days	Tested BOPs & associated well control equipment.
Environmental Incident		0 Days	
Fire Drill		0 Days	
First Aid		0 Days	
Lost Time Incident		0 Days	None
Man Overboard Drill		0 Days	
Near Miss		0 Days	) .
Rig Inspection		0 Days	.
Safety Meeting		0 Days	
Stop Cards		0 Days	.

Santos

DRILLING MORNING REPORT # 2
CALLISTER 01 (09 Oct 2004)

From : B.Houston / D.Atkins

Well Data

Country	Australia	M. Depth	0m	Cur. Hole Size	0in	AFE Cost	
Field	Otway Basin	TVD	0m	Casing OD	0in	AFE No.	
Drill Co.	Transocean	Progress	0m	Shoe TVD	0m	Daily Cost	
Rig	Jack Bates	Days from spud		F.I.T. / L.O.T.	0ppg / 0ppg	Cum Cost	
Wtr Dpth(LAT)	125.0m	Days on well	2.00			Planned TD	3768.0m
RT-ASL(LAT)	29.0m	Current Op @ 0600					
RT-ML	154m	Planned Op					

Summary of Period 0000 to 2400 Hrs

Operations For Period 0000 Hrs to 2400 Hrs on 09 Oct 2004

Phse	Cls (RC)	Op	From	To	Hrs	Depth	Activity Description
RM	P		0000	2400	24.00	0m	Rig under Tow to Callister 01 06:00hrs Lat= 36*10,5' S Long= 136*28,3' E Total dist trav = 78nm Dist to go= 270nm Avg speed= 5.38kn ETA=14:00hrs Monday 11th October 12:00hrs Lat: 36* 137,03" S Long: 137*03.0 E Dist Trav= 112nm Dist to go= 253nm Avg Speed= 5.2kn ETA= 13:00hrs Monday 11th 2004 18:00hrs: Lat: 36*46" S Long: 137*, 39'.5" E Dist Trav= 147NM Dist to go= 218nm Avg Speed= 5.3kn ETA= 11:30hrs Monday 11th 2004 23:59hrs: Lat= 37*, 04.2" S Long= 138* 17.5" E total Dist trav= 182nm Dist to go = 183nm Avg Speed= 5.4 ETA= 10:12hrs Monday 11th 2004 Rig operations: General Housekeeping Pressure tested Choke and Kill manifold w/ Cement unit

Operations For Period 0000 Hrs to 0600 Hrs on 10 Oct 2004

Phse	Cls (RC)	Op	From	To	Hrs	Depth	Activity Description
RM	P		0000	0600	6.00	0m	Rig under tow to Callister#1: 06:00hrs Lat= 37*21.7"S Long= 138*54.6' E Total dist trav = 217nm Dist to go= 148nm Avg speed= 5.5kn current speed= 6.3kn ETA=09:00hrs Monday 11th October

Phase Data to 2400hrs, 09 Oct 2004

Phase	Phase Hrs	Start On	Finish On	Cum Hrs	Cum Days	Max Depth
RIG MOVE/RIG-UP(RM)	33.5	08 Oct 2004	09 Oct 2004	33.50	1.396 days	0m

Bulk Stocks

Name	Unit	In	Used	Adjust	Balance
Fuel	M3	0	0	0	0.0
Drill Water	MT	0	0	0	0.0
Potable Water	MT	0	0	0	0.0
Gel	MT	0	0	0	135.0
Cement	MT	0	0	0	160.0
Barite	MT	0	0	0	211.0
Base Olefin	bbl	0	0	0	0.0
HTB cement	ft3	0	0	0	0.0
SBM	bbl	0	0	0	0.0
PreMix SBM	bbl	0	0	0	0.0
Helifuel	Litres	0	0	0	0.0
KCl Brine	bbl	0	0	0	0.0
Mud	sx	0	0	0	0.0
SBM Dril-In	bbl	0	0	0	0.0

Casing

OD	L.O.T. / F.I.T.	Csg Shoe (MD/TVD)	Cementing
20 "	/	/	
13 3/8"	/	/	
9 5/8"	/	/	

HSE Summary

Events	Date of Last	Days Since	Remarks
Abandon Drill	08 Oct 2004	1 Day	Weekly abandon rig drill.
BOP Test	08 Oct 2004	1 Day	Carried out 15000psi body test on BOP's. Tested all rams etc to 7500psi
Environmental Incident		0 Days	
Fire Drill		0 Days	
First Aid		0 Days	
Lost Time Incident		0 Days	None
Man Overboard Drill		0 Days	
Near Miss		0 Days	) .
Rig Inspection		0 Days	.
Safety Meeting		0 Days	
Stop Cards		0 Days	.

Marine

Weather check on 09 Oct 2004 at 00:00

Visibility	Wind Speed	Wind Dir.	Pressure	Air Temp.	Wave Height	Wave Dir.	Wave Period
0nm	6.0kn	050deg	1019bar	0C°	4.0m	050deg	0ft/sec

Roll	Pitch	Heave	Swell Height	Swell Dir.	Swell Period	Weather Comments
2.3deg	1.2deg	6.00m	0m	000deg	0ft/sec	

Rig Dir.	Ris. Tension	VDL	Comments
0deg	0klb	0klb	

Santos

DRILLING MORNING REPORT # 3
CALLISTER 01 (10 Oct 2004)

From : B.Houston / D.Atkins

Well Data

Country	Australia	M. Depth	0m	Cur. Hole Size	0in	AFE Cost	
Field	Otway Basin	TVD	0m	Casing OD	0in	AFE No.	
Drill Co.	Transocean	Progress	0m	Shoe TVD	0m	Daily Cost	
Rig	Jack Bates	Days from spud		F.I.T. / L.O.T.	0ppg / 0ppg	Cum Cost	
Wtr Dpth(LAT)	125.0m	Days on well	3.00			Planned TD	3768.0m
RT-ASL(LAT)	29.0m	Current Op @ 0600	Rig under tow				
RT-ML	154m	Planned Op	ETA Location @ 07:00hrs Proceed to Run Primary Anchors with Lady Astrid, Remove Lady Caroline from Tow Bridle to assist with secondary systems.				

Summary of Period 0000 to 2400 Hrs

Operations For Period 0000 Hrs to 2400 Hrs on 10 Oct 2004

Phse	Cls (RC)	Op	From	To	Hrs	Depth	Activity Description
RM	P		0000	0600	6.00	0m	Rig under tow to Callister#1: 06:00hrs Lat= 37*21.7"S Long= 138*54.6' E Total dist trav = 217nm Dist to go= 148nm Avg speed= 5.5kn current speed= 6.3kn ETA=09:00hrs Monday 11th October
RM	P		0600	2400	18.00	0m	12:00hrs Position Lat: 37*33.8S Long: 139* 19.0E Dist Trav= 239nm Dist to go= 126nm Avg Speed= 5.3 ETA= 09:00hrs Monday 11th 2004 18:00hrs: Lat: 37*,53"S Long: 140*, 03'.5" E Dist Trav= 279NM Dist to go= 86nm Avg Speed= 5.5kn ETA= 08:00hrs Monday 11th 2004 23:59hrs: Lat= 38,11.8" S Long= 140* 41.7" E total Dist trav= 315nm Dist to go = 50nm Avg Speed= 5.5 ETA= 07:00hrs Monday 11th 2004

Operations For Period 0000 Hrs to 0600 Hrs on 11 Oct 2004

Phse	Cls (RC)	Op	From	To	Hrs	Depth	Activity Description
RM	P		0000	0600	6.00	0m	Rig under tow to Callister#1: 06:00hrs Lat= 38*,11.8"S Long= 141*22.3' E Total dist trav = 39nm Dist to go= 11nm Avg speed= 5.6kn current speed= 6.5kn ETA=07:30hrs Monday 11th October 06:45hrs- End of Tow, Proceed to turn rig around and onto location

Phase Data to 2400hrs, 10 Oct 2004

Phase	Phase Hrs	Start On	Finish On	Cum Hrs	Cum Days	Max Depth
RIG MOVE/RIG-UP(RM)	57.5	08 Oct 2004	10 Oct 2004	57.50	2.396 days	0m

Bulk Stocks

Name	Unit	In	Used	Adjust	Balance
Fuel	M3	0	0	0	0.0
Drill Water	MT	0	0	0	0.0
Potable Water	MT	0	0	0	0.0
Gel	MT	0	0	0	135.0
Cement	MT	0	0	0	160.0
Barite	MT	0	0	0	211.0
Base Olefin	bbl	0	0	0	0.0
HTB cement	ft3	0	0	0	0.0
SBM	bbl	0	0	0	0.0
PreMix SBM	bbl	0	0	0	0.0
Helifuel	Litres	0	0	0	0.0
KCl Brine	bbl	0	0	0	0.0
Mud	sx	0	0	0	0.0
SBM Dril-In	bbl	0	0	0	0.0

Casing

OD	L.O.T. / F.I.T.	Csg Shoe (MD/TVD)	Cementing
20 "	/	/	
13 3/8"	/	/	
9 5/8"	/	/	

HSE Summary

Events	Date of Last	Days Since	Remarks
Abandon Drill	08 Oct 2004	2 Days	Weekly abandon rig drill.
BOP Test	08 Oct 2004	2 Days	Carried out 15000psi body test on BOP's. Tested all rams etc to 7500psi
Environmental Incident		0 Days	
Fire Drill	10 Oct 2004	0 Days	Simulated fire in Purifier room
First Aid		0 Days	
Lost Time Incident		0 Days	None
Man Overboard Drill		0 Days	
Near Miss		0 Days	) .
Rig Inspection		0 Days	.
Safety Meeting	10 Oct 2004	0 Days	
Stop Cards		0 Days	.

Marine

Weather check on 10 Oct 2004 at 00:00

Visibility	Wind Speed	Wind Dir.	Pressure	Air Temp.	Wave Height	Wave Dir.	Wave Period
10.00nm	7.0kn	070deg	1008bar	14.0C°	0m	000deg	0ft/sec

Roll	Pitch	Heave	Swell Height	Swell Dir.	Swell Period	Weather Comments
1.2deg	0.9deg	4.00m	0m	000deg	0ft/sec	

Rig Dir.	Ris. Tension	VDL	Comments
0deg	0klb	0klb	

Santos

DRILLING MORNING REPORT # 4
CALLISTER 01 (11 Oct 2004)

From : B.Houston / D.Atkins

Well Data

Country	Australia	M. Depth	0m	Cur. Hole Size	0in	AFE Cost	
Field	Otway Basin	TVD	0m	Casing OD	0in	AFE No.	
Drill Co.	Transocean	Progress	0m	Shoe TVD	0m	Daily Cost	
Rig	Jack Bates	Days from spud		F.I.T. / L.O.T.	0ppg / 0ppg	Cum Cost	
Wtr Dpth(LAT)	125.0m	Days on well	4.00			Planned TD	3768.0m
RT-ASL(LAT)	29.0m	Current Op @ 0600	Approaching location				
RT-ML	154m	Planned Op	Run anchors				

Summary of Period 0000 to 2400 Hrs

Tow to location

Operations For Period 0000 Hrs to 2400 Hrs on 11 Oct 2004

Phse	Cls (RC)	Op	From	To	Hrs	Depth	Activity Description
RM	P		0000	0830	8.50	0m	Rig under tow to Callister#1: 06:00hrs Lat= 38*,11.8"S Long= 141*22.3' E Total dist trav = 39nm Dist to go= 11nm Avg speed= 5.6kn current speed= 6.5kn ETA=07:30hrs Monday 11th October 06:45hrs- End of Tow, Proceed to turn rig around and onto location
RM	P	AH	0830	2400	15.50	0m	Anchor Handling Operations: #4 Anchor; 08:40hrs- #4 PCC passed to Lady Astrid 09:00hrs-All stop,on #4 (Check Anchor position at roller and re-position rig) 09:50hrs - continue paying out 12:20hrs-Heaving in #4 700'(Astrid unable to move with chain) 12:35hrs- Continue to pay out #4 12:52hrs- #4 on Bottom 13:08hrs-paying out #4 to position rig 13:35hrs-Allstop #4 (850' wire out) 13:40hrs-Lady Astrid chasing back 14:37hrs-#4 PCC Racked at rig (6hrs Total) #8 Anchor: 15:03hrs- #8PCP passed to Lady Astrid 15:10hrs-Commence paying out #8 15:40hrs-Allstop #8(2798'chain) 15:47hrs-#8 on Bottom 15:50hrs-Lady Astrid chasing back 16:20hrs-#8 PCC racked at rig. (1hr,17mins) #5Anchor: 16:35hrs-#5 PCC passed to Lady Astrid (16:50hrs- Heaving in on #4 and paying out #8 to position rig,17:14hrs- Rig in position) 17:23hrs- Commence paying out#5 17:45hrs -crossing over from chain to wire 17:57hrs- paying out #5 18:03hrs- #5 on Bottom 18:45hrs- Chasing back 19:31hrs-#5 PCC racked at rig. (4 hrs total) #1 Anchor: 19:52hrs- #1 PCC passed to Lady Astrid 19:59hrs- Pay out #1 (20:40hrs- Lady Caroline OFF TOW BRIDLE.) 20:42hrs- #1 on bottom 20:48hrs- Chasing back. 21:25hrs-#1 lost tension, Lady Astrid chase backout to anchor 22:22hrs- #1 off Bottom 22:30hrs-#1 at roller and on its side , Lady Astrid attempting to right anchor 22:51hrs Pay out wire on #1 23:01hrs#1 on bottom 23:02hrs Chasing back 23:45hrs- #1 PCC passed to rig (approx 4hrs)

Phse	Cls (RC)	Op	From	To	Hrs	Depth	Activity Description
							Re-run#4 Anchhor: 21:13hrs- PCC passed to Lady Caroline 21:20hrs- Lady Caroline chasing out to Anchor 21:43hrs- #4 off Bottom 21:58hrs- Pay out wireon #4 22:10hrs- #4 on Bottom 22:12hrs- Lady Caroline chasing back 22:52hrs- #4 PCC passed to rig (1hr,42mins) #3 Anchor: 23:05hrs- #3 PCC passed to Lady Caroline 23:20hrs- Pay out #3 23:53hrs- All stop, Ladt Caroline stretching wire

Operations For Period 0000 Hrs to 0600 Hrs on 12 Oct 2004

Phse	Cls (RC)	Op	From	To	Hrs	Depth	Activity Description
RM	P	AH	0000	0600	6.00	0m	Anchor Handling operations Contd: #3 Anchor: 00:12hrs- #3 on Bottom 00:16hrs- Lady Caroline chasing back 00:42hrs- #3 PCC racked at rig (2hrs total) #7 Anchor: 00:15hrs- #7 PCC passed to Lady Astrid 00:20hrs- Problems with #7 windlass 01:06hrs- Pay out #7 chain 01:37hrs- Continue to pay out #4 wire 01:51hrs- Anchor on Bottom 01:53hrs- Lady Astrid chase back to rig 02:36hrs- #7 PCC back to rig. (2hr,21mins) #2 Anchor: 01:00hrs- #2 PCC passed to Lady Caroline 01:14hrs- All stop #2 (Burst hose on windlass) 01:44hrs- pay out #2 chain 02:15hrs- Pay out #2 Wire 02:34hrs- Anchor on Bottom. 02:36hrs- Lady Caroline chase in 03:07hrs- #2 PCC back to rig. (3hr,7mins) #6 Anchor: 02:58hrs- #6 PCC passed to Lady Astrid 03:11hrs- Pay out chain #6 03:41hrs- pay out wire #6 04:18hrs- #6 on Bottom 04:20hrs- Astrid chasing back 05:00hrs- #6 PCC passed back to rig (3hrs) 03:22hrs:- Commence Ballasting to drilling draft #8 Anchor:Extra wire run 03:38hrs- #8 PCC passed to Lady Caroline 04:12hrs- Lady Caroline at Anchor 04:30hrs- #8 off Bottom 04:34hrs- Pay out #8 wire 04:45hrs- #8 Bottom, and chase back 05:23hrs- #8PCC passed to rig (2hrs) 05:00hrs:- Commence cross tensioning testing #2 & #6-ok 05:15hrs:- Commence testing #1 & #5 05:30hrs:- Commence testing #4 & #8 05:50hrs:- Commence testing #3 & #7 ..

Phase Data to 2400hrs, 11 Oct 2004

Phase	Phase Hrs	Start On	Finish On	Cum Hrs	Cum Days	Max Depth
RIG MOVE/RIG-UP(RM)	81.5	08 Oct 2004	11 Oct 2004	81.50	3.396 days	0m

WBM Data

Mud Type:		API FL:	0cm³/30m	Cl:	0	Solids:	0	Viscosity:	0sec/qt
Sample-From:		Filter-Cake:	0/32nd"	K+C*1000:	0%	H2O:	0%	PV:	0cp
Time:		HTHP-FL:	0cm³/30m	Hard/Ca:	0	Oil:	0%	YP:	0lb/100ft²
Weight:	0ppg	HTHP-Cake:	0/32nd"	MBT:	0	Sand:		Gels 10s:	0
Temp:	0C°			PM:	0	pH:	0	Gels 10m:	0
				PF:	0	PHPA:	0ppb	Fann 003:	0
								Fann 006:	0
								Fann 100:	0
								Fann 200:	0
								Fann 300:	0
								Fann 600:	0

Bulk Stocks

Name	Unit	In	Used	Adjust	Balance
Fuel	Mt	0	8	530	522.0
Drill Water	Mt	0	4	909	905.0
Potable Water	Mt	0	30	294	264.0
Gel	MT	0	0	0	135.0
Cement	MT	0	0	0	160.0
Barite	MT	0	0	0	211.0
Base Olefin	bbl	0	0	0	0.0
HTB cement	ft3	0	0	0	0.0
SBM	bbl	0	0	0	0.0
PreMix SBM	bbl	0	0	0	0.0
Helifuel	Litres	0	0	0	0.0
KCl Brine	bbl	0	0	0	0.0
Mud	sx	0	0	0	0.0
SBM Dril-In	bbl	0	0	0	0.0

Casing

OD	L.O.T. / F.I.T.	Csg Shoe (MD/TVD)	Cementing
20 "	/	/	
13 3/8"	/	/	
9 5/8"	/	/	

HSE Summary

Events	Date of Last	Days Since	Remarks
Abandon Drill	08 Oct 2004	3 Days	Weekly abandon rig drill.
BOP Test	08 Oct 2004	3 Days	Carried out 15000psi body test on BOP's. Tested all rams etc to 7500psi
Environmental Incident		0 Days	
Fire Drill	10 Oct 2004	1 Day	Simulated fire in Purifier room
First Aid		0 Days	
Lost Time Incident		0 Days	None
Near Miss	11 Oct 2004	0 Days	Chef was cooking meatballs in oven whilst rig was running anchors, as he went to check oven the rig listed and the oil in the shallow pan spilt over the lip and came in contact with element starting a fire, Chef closed door and fire went out. New catering company not used to the motion of the rig.(experienced people not used to this rigs motion)
Safety Meeting	10 Oct 2004	1 Day	
Stop Cards		0 Days	.

Marine

Weather check on 11 Oct 2004 at 00:00

Visibility	Wind Speed	Wind Dir.	Pressure	Air Temp.	Wave Height	Wave Dir.	Wave Period
5.00nm	23.0kn	335deg	1006bar	14.8C°	5.0m	240deg	11.0ft/sec

Roll	Pitch	Heave	Swell Height	Swell Dir.	Swell Period	Weather Comments
0.6deg	1.3deg	3.00m	0m	000deg	0ft/sec	

Rig Dir.	Ris. Tension	VDL	Comments
213.0deg	0klb	8118.0klb	

Boats	Arrived (date/time)	Departed (date/time)	Status	Bulks		
Lady Astrid	06:00-11th Oct			Item	Unit	Quantity
Lady Caroline				Item	Unit	Quantity

Helicopter Movement

Flight #	Time	Destination	Comment	Pax
1	11:10	Jack Bates	85min flight duration, + 30 min fuel stop. Total= 115mins	0
1	11:25	Essendon	85min flight duration, + 30 min fuel stop. Total= 115mins	0
2	15:49	Jack Bates	85min flight duration, + 30 min fuel stop. Total= 115mins	0
2	15:59	Essendon	85min flight duration, + 30 min fuel stop. Total= 115mins	0

Santos

DRILLING MORNING REPORT # 5
CALLISTER 01 (12 Oct 2004)

From : B.Houston / D.Atkins

Well Data

Country	Australia	M. Depth	0m	Cur. Hole Size	0in	AFE Cost	
Field	Otway Basin	TVD	0m	Casing OD	0in	AFE No.	
Drill Co.	Transocean	Progress	0m	Shoe TVD	0m	Daily Cost	
Rig	Jack Bates	Days from spud		F.I.T. / L.O.T.	0ppg / 0ppg	Cum Cost	
Wtr Dpth(LAT)	125.0m	Days on well	5.00			Planned TD	3768.0m
RT-ASL(LAT)	29.0m	Current Op @ 0600	Making up 30" Conductor				
RT-ML	154m	Planned Op	Land out conductor in PGB RIH w/ 26"x 36" Drilling Assy. Spud Callister#1				

Summary of Period 0000 to 2400 Hrs

Finish running anchors. Ballast to drilling draft. Pick up drill collars for BHA.

Operations For Period 0000 Hrs to 2400 Hrs on 12 Oct 2004

Phse	Cls (RC)	Op	From	To	Hrs	Depth	Activity Description
RM	P	AH	0000	0700	7.00	0m	Anchor Handling operations Contd: #3 Anchor: 00:12hrs- #3 on Bottom 00:16hrs- Lady Caroline chasing back 00:42hrs- #3 PCC racked at rig (2hrs total) #7 Anchor: 00:15hrs- #7 PCC passed to Lady Astrid 00:20hrs- Problems with #7 windlass 01:06hrs- Pay out #7 chain 01:37hrs- Continue to pay out #4 wire 01:51hrs- Anchor on Bottom 01:53hrs- Lady Astrid chase back to rig 02:36hrs- #7 PCC back to rig. (2hr,21mins) #2 Anchor: 01:00hrs- #2 PCC passed to Lady Caroline 01:14hrs- All stop #2 (Burst hose on windlass) 01:44hrs- pay out #2 chain 02:15hrs- Pay out #2 Wire 02:34hrs- Anchor on Bottom. 02:36hrs- Lady Caroline chase in 03:07hrs- #2 PCC back to rig. (3hr,7mins) #6 Anchor: 02:58hrs- #6 PCC passed to Lady Astrid 03:11hrs- Pay out chain #6 03:41hrs- pay out wire #6 04:18hrs- #6 on Bottom 04:20hrs- Astrid chasing back 05:00hrs- #6 PCC passed back to rig (3hrs) 03:22hrs:- Commence Ballasting to drilling draft #8 Anchor:Extra wire run 03:38hrs- #8 PCC passed to Lady Caroline 04:12hrs- Lady Caroline at Anchor 04:30hrs- #8 off Bottom 04:34hrs- Pay out #8 wire 04:45hrs- #8 Bottom, and chase back 05:23hrs- #8PCC passed to rig (2hrs) 05:00hrs:- Commence cross tensioning testing #2 & #6-ok 05:15hrs:- Commence testing #1 & #5 05:30hrs:- Commence testing #4 & #8 05:55hrs:- Commence testing #3 & #7 06:10hrs:- Complete cross tensioning test of Anchors to 300Kips 06:10hrs:- Commence skidding rig onto location 06:45hrs:- Rig on Location Rig heading 216* Lat-38*,31.59" S Long- 141*,28'.23.8" E ..
RM	P	RM	0700	1100	4.00	0m	Continue Ballast rig down to drilling draft 75'
PS	P	HBHA	1100	1330	2.50	0m	Prepare rig floor and pipe deck to P/up 5" HWDP

Phse	Cls (RC)	Op	From	To	Hrs	Depth	Activity Description
PS	P	HBHA	1330	1600	2.50	0m	P/up 5" HWDP to 86m Lower drape hoses down into caisson Start mixing Spud Mud
PS	P	WKB	1600	1700	1.00	0m	SCR's:- Calibrate TDS Torque setting in low gear. Backload Lady Astrid with excess equipment and empty containers
PS	P	HBHA	1700	1900	2.00	0m	Continue to P/up 5" HWDP and rack in Derrick total 6 stds. Held pre-job safety meeting with incomming crew.
PS	P	HT	1900	2000	1.00	0m	M/up side entry sub, TIW, and install cement hose and rack in derrick. M/up 30" Housing R-tool on 5" HWDP and rack back same
PS	P	WKB	2000	2030	0.50	0m	SCR's:- Calibrate TDS Torque setting in High gear Take on Bulk , and fuel from Lady Astrid
PS	P	HBHA	2030	2400	3.50	0m	P/up and make up Accelerator , 2x 8" Dc and Jars, 2 x 8" Dc

Operations For Period 0000 Hrs to 0600 Hrs on 13 Oct 2004

Phse	Cls (RC)	Op	From	To	Hrs	Depth	Activity Description
PS	P	HBHA	0000	0400	4.00	0m	P/up and Make up 26" x 36" Drilling assy (Bit, Pony, H/O, flt sub, Anderdrift,totco,Stab,DC,Stab,DC)
PS	P	CRN	0400	0600	2.00	0m	Hold pre job meeting Rig up and run 30" conductor,to 34.87m

Phase Data to 2400hrs, 12 Oct 2004

Phase	Phase Hrs	Start On	Finish On	Cum Hrs	Cum Days	Max Depth
RIG MOVE/RIG-UP(RM)	92.5	08 Oct 2004	12 Oct 2004	92.50	3.854 days	0m
PRESPUD(PS)	13	12 Oct 2004	12 Oct 2004	105.50	4.396 days	0m

WBM Data

Mud Type:	Spud Mud	API FL:	0cm³/30m	Cl:	0	Solids:	0	Viscosity:	100sec/qt
Sample-From:		Filter-Cake:	0/32nd"	K+C*1000:	0%	H2O:	0%	PV:	0cp
Time:		HTHP-FL:	0cm³/30m	Hard/Ca:	0	Oil:	0%	YP:	0lb/100ft²
Weight:	0ppg	HTHP-Cake:	0/32nd"	MBT:	0	Sand:		Gels 10s:	0
Temp:	0C°			PM:	0	pH:	0	Gels 10m:	0
				PF:	0	PHPA:	0ppb	Fann 003:	0
								Fann 006:	0
								Fann 100:	0
								Fann 200:	0
								Fann 300:	0
								Fann 600:	0

Comment: Build first volume of spud mud. 614 bbls.

Bulk Stocks

Name	Unit	In	Used	Adjust	Balance
Fuel	M3	0	0	0	0.0
Drill Water	MT	0	0	0	905.0
Potable Water	MT	0	0	0	264.0
Gel	MT	0	0	0	135.0
Cement	MT	0	0	0	160.0
Barite	MT	0	0	0	211.0
Base Olefin	bbl	0	0	0	0.0
HTB cement	ft3	0	0	0	0.0
SBM	bbl	0	0	0	0.0
PreMix SBM	bbl	0	0	0	0.0
Helifuel	Litres	0	0	0	0.0
KCl Brine	bbl	0	0	0	0.0
Mud	sx	0	0	0	0.0
SBM Dril-In	bbl	0	0	0	0.0

Casing

OD	L.O.T. / F.I.T.	Csg Shoe (MD/TVD)	Cementing
20 "	/	/	
13 3/8"	/	/	
9 5/8"	/	/	

HSE Summary

Events	Date of Last	Days Since	Remarks
Abandon Drill	08 Oct 2004	4 Days	Weekly abandon rig drill.
BOP Test	08 Oct 2004	4 Days	Carried out 15000psi body test on BOP's. Tested all rams etc to 7500psi
Environmental Incident		0 Days	
Fire Drill	10 Oct 2004	2 Days	Simulated fire in Purifier room
First Aid		0 Days	
Lost Time Incident		0 Days	None
Safety Meeting	10 Oct 2004	2 Days	
Stop Cards		0 Days	.

Marine

Weather check on 12 Oct 2004 at 00:00

Visibility	Wind Speed	Wind Dir.	Pressure	Air Temp.	Wave Height	Wave Dir.	Wave Period
10.00nm	7.0kn	070deg	1008bar	14.0C°	0m	000deg	0ft/sec

Roll	Pitch	Heave	Swell Height	Swell Dir.	Swell Period	Weather Comments
1.2deg	0.9deg	4.00m	0m	000deg	0ft/sec	

Rig Dir.	Ris. Tension	VDL	Comments
0deg	0klb	0klb	

Boats	Arrived (date/time)	Departed (date/time)	Status	Bulks		
Lady Caroline				**Item**	**Unit**	**Quantity**
Lady Astrid	06:00			**Item**	**Unit**	**Quantity**

Santos

DRILLING MORNING REPORT # 6
CALLISTER 01 (13 Oct 2004)

From : B.Houston / D.Atkins

Well Data

Country	Australia	M. Depth	192.0m	Cur. Hole Size	0in	AFE Cost	
Field	Otway Basin	TVD	192.0m	Casing OD	0in	AFE No.	
Drill Co.	Transocean	Progress	34.0m	Shoe TVD	0m	Daily Cost	
Rig	Jack Bates	Days from spud	0.50	F.I.T. / L.O.T.	0ppg / 0ppg	Cum Cost	
Wtr Dpth(LAT)	129.4m	Days on well	6.00			Planned TD	3629.0m
RT-ASL(LAT)	29.0m	Current Op @ 0600	Supporting wieght of conductor whilst wait on cement				
RT-ML	158.4m	Planned Op	Retrieve R-tool , M/up 18 3/4" wellhead and r-tool etc. M/up 17 1/2" BHA and RIH to drill cement and shoe				

Summary of Period 0000 to 2400 Hrs

Drilled 36" hole from 158m to 192m. POH, run 30" conductor and PGB. Position rig to reduce bullseye reading. Circulate casing and cement. WOC, holding tension.

Operations For Period 0000 Hrs to 2400 Hrs on 13 Oct 2004

Phse	Cls (RC)	Op	From	To	Hrs	Depth	Activity Description
PS	P	HBHA	0000	0400	4.00	0m	P/up and Make up 26" x 36" Drilling assy (Bit, Pony, H/O, flt sub, Anderdrift,totco,Stab,DC,Stab,DC)
PS	P	CRN	0400	0700	3.00	0m	Hold pre job meeting Rig up and run 30" conductor,to 34.87m M/up R-tool into housing , lower conductor and land out into PGB in moonpool. Retrieve R-tool and rack in derrick.
PS	P	HBHA	0700	0800	1.00	0m	Clean up Rig floor and hole pre job safety meeting w/ running BHA. 07:30hrs- RIH w/ 26" x 36" BHA f/ Derrick change out elevators
PS	P	HBHA	0800	1000	2.00	0m	P/up from deck- 1 x 9 1/2" DC, 5x 8" DC
PS	P	TI	1000	1130	1.50	158.0m	RIH and Tag sea bed @ 158.42m tide coreected.
PS	P	SVY	1130	1200	0.50	158.0m	Pull up 4m and test Anderdrift survey tool
SH	P	DA	1200	1500	3.00	192.0m	Spud callister #1 Drill from 158m to 192m Attempted to take Anderdrift survey (problems with pipe u-tubing)
SH	P	CHC	1500	1515	0.25	192.0m	Displace hole Volume x 1.5 times and re attempt to take Anderdrift survey
SH	P	ROV	1515	1545	0.50	192.0m	ROV set marker beacons on seabed, Rig floor drop Totco single shot survey tool
SH	P	WT	1545	1630	0.75	192.0m	Wiper trip f/ 192m to 165 m, Rih f/ 165m to 192m Tag Bttm and Anderdrift survey
SH	P	CHC	1630	1645	0.25	192.0m	Displace hole Volume x1.5 times 255spm= 1500psi
SH	P	TO	1645	1700	0.25	192.0m	POOH f/ 192m to 90m
SH	P	SVY	1700	1730	0.50	192.0m	Rig up and retrieve Totco survey Barell- Missfire
SH	P	TO	1730	1815	0.75	192.0m	Continue POOH and Rack BHA in Derrick
SH	P	CRF	1815	1830	0.25	192.0m	Clear rig floor of excess equipment/ clean up
SC	P	CRN	1830	2000	1.50	192.0m	P/up and m/up 5" stinger below 30" housing R-tool, RIH w/ R-tool and latch into 30" Conductor and PGB. Lower and fill casing w/ seawater via TDS , Close ball valve and install bull plug.
SC	P	CRN	2000	2045	0.75	192.0m	Continue to Run Conductor in on HWDP landing string to 150m.
SC	TP (CWR)	CRN	2045	2145	1.00	192.0m	Landing string turned during pipe m/up. POOH w/ conductor until PGB was visible in moonpool, Re-orientate PGB so the posts lined up with BOP RIH back to 150m
SC	P	CRN	2145	2245	1.00	192.0m	Stab conductor into Seabed and continue to RIH to 192m- Spaced PGB to 2m Above seabed
SC	P	CRN	2245	2400	1.25	192.0m	Bulls eye reading 1 to 2 degrees . Winch Rig towards Aft- Stbd/aft and work string until bullseye reading below 1 degree, Circulated at 60 spm

Operations For Period 0000 Hrs to 0600 Hrs on 14 Oct 2004

Phse	Cls (RC)	Op	From	To	Hrs	Depth	Activity Description
SC	P	CMC	0000	0115	1.25	192.0m	Pressure test cement lines. Commence cement job on 30 " Conductor Pumped 25bbls Seawater Pumped 20bbl Fluorecein Dye spacer Mixed and pumped 230bbls of 15.8ppg cement slurry Displaced with 48bbls Seawater. Returns monitored at seabed via ROV throughout complete cement job.

Phse	Cls (RC)	Op	From	To	Hrs	Depth	Activity Description
SC	P	WOC	0115	0600	4.75	192.0m	Support wieght of conductor whilst wait on cement to set

Phase Data to 2400hrs, 13 Oct 2004

Phase	Phase Hrs	Start On	Finish On	Cum Hrs	Cum Days	Max Depth
RIG MOVE/RIG-UP(RM)	92.5	08 Oct 2004	12 Oct 2004	92.50	3.854 days	0m
PRESPUD(PS)	25	12 Oct 2004	13 Oct 2004	117.50	4.896 days	158.0m
SURFACE HOLE(SH)	6.5	13 Oct 2004	13 Oct 2004	124.00	5.167 days	192.0m
SURFACE CASING(SC)	5.5	13 Oct 2004	13 Oct 2004	129.50	5.396 days	192.0m

WBM Data

Mud Type:	Spud Mud	API FL:	0cm³/30m	Cl:	0	Solids:	0	Viscosity:	120sec/qt
Sample-From:		Filter-Cake:	0/32nd"	K+C*1000:	0%	H2O:	0%	PV:	0cp
Time:		HTHP-FL:	0cm³/30m	Hard/Ca:	0	Oil:	0%	YP:	0lb/100ft²
Weight:	8.70ppg	HTHP-Cake:	0/32nd"	MBT:	0	Sand:		Gels 10s:	0
Temp:	0C°			PM:	0	pH:	0	Gels 10m:	0
				PF:	0	PHPA:	0ppb	Fann 003:	0
								Fann 006:	0
								Fann 100:	0
								Fann 200:	0
								Fann 300:	0
								Fann 600:	0

Comment: Continue to build additional spud mud.Prepare cement water.

Bit # 1

Wear	I	O1	D	L	B	G	O2	R
	0	0	NO		0	I		TD

Size (''):	36.00in	IADC#	115	**Nozzles**		**Drilled over last 24 hrs**	**Calculated over Bit Run**
Mfr:	SMITH	WOB(avg)	2.0klb	No.	Size	Progress 34.0m	Cum. Progress 34.0m
Type:	Rock	RPM(avg)	105	3	24/32nd"	On Bottom Hrs 3.00h	Cum. On Btm Hrs 3.00h
Serial No.:	MR4109	F.Rate	500gpm			IADC Drill Hrs 5.00h	Cum IADC Drill Hrs 5.00h
Bit Model	DSJc	SPP	1000psi			Total Revs 0	Cum Total Revs 0
Depth In	158.4m	TFA	1.325			ROP(avg) 11.33 m/hr	ROP(avg) 11.33 m/hr
Depth Out	192.0m						

BHA # 1

Weight(Wet)	62.0klb	Length	202.0m	Torque(max)	3ft-lbs	D.C. (1) Ann Velocity
Wt Below Jar(Wet)	0klb	String	200.0klb	Torque(Off.Btm)	1ft-lbs	D.C. (2) Ann Velocity
		Pick-Up	200.0klb	Torque(On.Btm)	2ft-lbs	H.W.D.P. Ann Velocity
		Slack-Off	200.0klb			D.P. Ann Velocity

BHA Run Description: 26", 36" Hole Opener, FS, AnderDrift, X-O, 17-1/2"Stab, 1x9-1/2"DC, 17-1/2"Stab, 2x9-1/2"DC, X-O, 5x8"DC, X-O, 12x5"HW.

Bulk Stocks

Name	Unit	In	Used	Adjust	Balance
Fuel	M3	0	0	0	0.0
Drill Water	MT	0	0	0	905.0
Potable Water	MT	0	0	0	264.0
Gel	MT	0	0	0	135.0
Cement	MT	0	0	0	160.0
Barite	MT	0	0	0	211.0
Base Olefin	bbl	0	0	0	0.0
HTB cement	ft3	0	0	0	0.0
SBM	bbl	0	0	0	0.0
PreMix SBM	bbl	0	0	0	0.0
Helifuel	Litres	0	0	0	0.0
KCl Brine	bbl	0	0	0	0.0
Mud	sx	0	0	0	0.0
SBM Dril-In	bbl	0	0	0	0.0

Personnel On Board

Company	Pax
Santos	28
Transocean	62
Total	90

Casing

OD	L.O.T. / F.I.T.	Csg Shoe (MD/TVD)	Cementing
20 "	/	/	
13 3/8"	/	/	
9 5/8"	/	/	

HSE Summary

Events	Date of Last	Days Since	Remarks
Abandon Drill	08 Oct 2004	5 Days	Weekly abandon rig drill.
BOP Test	08 Oct 2004	5 Days	Carried out 15000psi body test on BOP's. Tested all rams etc to 7500psi
Environmental Incident		0 Days	
Fire Drill	10 Oct 2004	3 Days	Simulated fire in Purifier room
First Aid		0 Days	
Lost Time Incident		0 Days	None
Safety Meeting	10 Oct 2004	3 Days	
Stop Cards	13 Oct 2004	0 Days	Floorhands reminded to move away from rig tongs when under heavy loading when making up/ breaking out 9 1/" DC's

Marine

Weather check on 13 Oct 2004 at 00:00

Visibility	Wind Speed	Wind Dir.	Pressure	Air Temp.	Wave Height	Wave Dir.	Wave Period
8.00nm	28.0kn	290deg	1010bar	13.0C°	0m	000deg	0ft/sec

Roll	Pitch	Heave	Swell Height	Swell Dir.	Swell Period	Weather Comments
0.5deg	1.0deg	2.00m	2.7m	280deg	11.0ft/sec	

Rig Dir.	Ris. Tension	VDL	Comments
0deg	0klb	0klb	

Boats	Arrived (date/time)	Departed (date/time)	Status
Lady Astrid	06:00		
Lady Caroline			

Bulks		
Item	**Unit**	**Quantity**
Item	**Unit**	**Quantity**

Santos

DRILLING MORNING REPORT # 7
CALLISTER 01 (14 Oct 2004)

From : B.Houston / D.Atkins

Well Data

Country	Australia	M. Depth	192.0m	Cur. Hole Size	0in	AFE Cost	
Field	Otway Basin	TVD	192.0m	Casing OD	0in	AFE No.	
Drill Co.	Transocean	Progress	0m	Shoe TVD	0m	Daily Cost	
Rig	Jack Bates	Days from spud	1.50	F.I.T. / L.O.T.	0ppg / 0ppg	Cum Cost	
Wtr Dpth(LAT)	129.4m	Days on well	7.00			Planned TD	3629.0m
RT-ASL(LAT)	29.0m	Current Op @ 0600	Fixing #2 mud pump- Rag found in Power End of mud pump				
RT-ML	158.4m	Planned Op	Drill out cement and shoe track Drill ahead 17 1/2" hole				

Summary of Period 0000 to 2400 Hrs

Cemented Casing. WOC. Lay out R/Tool. Make up 17-1/2" BHA. Rig up Stab Master casing running tool.

Operations For Period 0000 Hrs to 2400 Hrs on 14 Oct 2004

Phse	Cls (RC)	Op	From	To	Hrs	Depth	Activity Description
SC	P	CMC	0000	0115	1.25	192.0m	Pressure test cement lines. Commence cement job on 30 " Conductor Pumped 25bbls Seawater Pumped 20bbl Fluorecein Dye spacer Mixed and pumped 230bbls of 15.8ppg cement slurry Displaced with 48bbls Seawater. Returns monitored at seabed via ROV throughout complete cement job.
SC	P	WOC	0115	0900	7.75	192.0m	Support wieght of conductor whilst wait on cement to set
SC	TP (RE)	WOC	0900	1000	1.00	192.0m	Trouble shoot electrical problem in new drillers control panel.
SC	P	TO	1000	1130	1.50	192.0m	Release 30" R-tool 4 turns to the right and POOH to surface. Break and lay out R-tool and strap landing stringin derrick
SC	P	HT	1130	1415	2.75	192.0m	P/up and m/up 18 3/4" R-tool with pup Jts and plug launcher below.lay out same P/up 18 3/4" Wellhead Housing and install in Rotary table. P/up R-tool assy install wiper Plugs and m/up into wellhead , Lay down complete Assy
SC	P	HT	1415	1545	1.50	192.0m	Change out handling equipment and clear rig floor, Lay out side entry sub from cement stand in derrick, P/up WeatherfordTDS cement head and rack back in derrick.
SC	P	HBHA	1545	1715	1.50	192.0m	Hold pre-job safety meeting on BHA handling, Proceed to break and lay out 26" x 36" BHA
SC	P	HBHA	1715	1815	1.00	192.0m	P/up and m/up 17 1/2" BHA from deck
SC	P	TI	1815	2030	2.25	192.0m	RIH w/ 17 1/2" BHA to 124m
SC	P	TI	2030	2100	0.50	192.0m	Test Anderdrift survey tool- Tested twice with good pressure indications that tool is functioning correctly
SC	P	TI	2100	2215	1.25	192.0m	Continue to RIH f/ 124m to 150m (Troube shoot electrical fault with #1 mud pump)
SC	P	TI	2215	2300	0.75	192.0m	Skid Rig back 5m to forward (original Position) whilst hold Riserless drilling meeting with on tour crew, Fine tune rig position and stab into 30" Housing and RIH to 164m
SC	P	OA	2300	2400	1.00	192.0m	Weatherford casing crew function test Stab Master system and check safety systems Drill crew held THINK drill on shallow gas , Barrier taped moonpool area and made this area off limits.

Operations For Period 0000 Hrs to 0600 Hrs on 15 Oct 2004

Phse	Cls (RC)	Op	From	To	Hrs	Depth	Activity Description
SC	P	TI	0000	0015	0.25	192.0m	Rih and Tag Top of Cement @ 185m tide corrected
SC	P	OA	0015	0200	1.75	192.0m	Weatherford install control cables on travelling block assy for casing elevator and slips safety system (ISIS)
SC	P	DC	0200	0230	0.50	192.0m	Drill cement f/ 185m to 187m
SC	TP (MIS)	RR	0230	0600	3.50	192.0m	Intermittent Alarms on #3 mud pump then #2 mud pump whilst drilling cement. Trouble shoot and fix problem before drilling out shoe into O.Hole #2 Mud pump oil lube pump starving removed hoses and attempt to clear blockage. Removed Back cover from power end and found large rag in sump. Drain oil and rag fibres, flush out lubricating system

Phase Data to 2400hrs, 14 Oct 2004

Phase	Phase Hrs	Start On	Finish On	Cum Hrs	Cum Days	Max Depth
RIG MOVE/RIG-UP(RM)	92.5	08 Oct 2004	12 Oct 2004	92.50	3.854 days	0m
PRESPUD(PS)	25	12 Oct 2004	13 Oct 2004	117.50	4.896 days	158.0m
SURFACE HOLE(SH)	6.5	13 Oct 2004	13 Oct 2004	124.00	5.167 days	192.0m
SURFACE CASING(SC)	29.5	13 Oct 2004	14 Oct 2004	153.50	6.396 days	192.0m

WBM Data

Mud Type:	Spud Mud	API FL:	0cm³/30m	Cl:	0	Solids:	0	Viscosity:	120sec/qt
Sample-From:		Filter-Cake:	0/32nd"	K+C*1000:	0%	H2O:	0%	PV:	0cp
Time:		HTHP-FL:	0cm³/30m	Hard/Ca:	40	Oil:	0%	YP:	0lb/100ft²
Weight:	8.70ppg	HTHP-Cake:	0/32nd"	MBT:	0	Sand:		Gels 10s:	0
Temp:	0C°			PM:	0	pH:	9.1	Gels 10m:	0
				PF:	0	PHPA:	0ppb	Fann 003:	0
								Fann 006:	0
								Fann 100:	0
								Fann 200:	0
								Fann 300:	0
								Fann 600:	0

Comment: Continue to build additional spud mud.
MU BHA and RIH.

Bit # 2

Wear	I	O1	D	L	B	G	O2	R

Size (''):	17.50in	IADC#		**Nozzles**		**Drilled over last 24 hrs**		**Calculated over Bit Run**	
Mfr:	REED	WOB(avg)	0klb	No.	Size	Progress	0m	Cum. Progress	0m
Type:	Rock	RPM(avg)	0	1	20/32nd"	On Bottom Hrs	0h	Cum. On Btm Hrs	0h
Serial No.:	A98111	F.Rate	0gpm	3	22/32nd"	IADC Drill Hrs	0h	Cum IADC Drill Hrs	0h
Bit Model	T111	SPP	0psi			Total Revs	0	Cum Total Revs	0
Depth In	192.0m	TFA	1.420			ROP(avg)	N/A	ROP(avg)	0.00 m/hr
Depth Out	0m								

BHA # 2

Weight(Wet)	0klb	Length	275.1m	Torque(max)	0ft-lbs	D.C. (1) Ann Velocity
Wt Below Jar(Wet)	0klb	String	0klb	Torque(Off.Btm)	0ft-lbs	D.C. (2) Ann Velocity
		Pick-Up	0klb	Torque(On.Btm)	0ft-lbs	H.W.D.P. Ann Velocity
		Slack-Off	0klb			D.P. Ann Velocity

BHA Run Description: 17 1/2" Bit, Bit sub(Solid float), 9 1/2" Anderdrift, X-O, 9 1/2" Pony DC, (totco)17 1/2" STab, 9 1/2" DC, 17 1/2" Stab, 9 1/2" DC, 9 1/2" DC, X-O, 8x8" DC, Jar, 2x8" DC, Accelerator, 1x8" DC, X-O, 12x 5" HWDP.

BHA # 1

Weight(Wet)	62.0klb	Length	202.0m	Torque(max)	3ft-lbs	D.C. (1) Ann Velocity
Wt Below Jar(Wet)	0klb	String	200.0klb	Torque(Off.Btm)	1ft-lbs	D.C. (2) Ann Velocity
		Pick-Up	200.0klb	Torque(On.Btm)	2ft-lbs	H.W.D.P. Ann Velocity
		Slack-Off	200.0klb			D.P. Ann Velocity

BHA Run Description: 26", 36" Hole Opener, FS, AnderDrift, X-O, 17-1/2"Stab, 1x9-1/2"DC, 17-1/2"Stab, 2x9-1/2"DC, X-O, 5x8"DC, X-O, 12x5"HW.

Bulk Stocks

Name	Unit	In	Used	Adjust	Balance
Fuel	MT	0	9	192	705.0
Drill Water	MT	0	61	0	844.0
Potable Water	MT	0	30	0	234.0
Gel	MT	0	17	0	118.0
Cement	MT	0	0	20	180.0
Barite	MT	0	0	0	211.0
Base Olefin	bbl	0	0	0	0.0
HTB cement	ft3	0	0	0	0.0
SBM	bbl	0	0	0	0.0
PreMix SBM	bbl	0	0	0	0.0
Helifuel	Litres	0	0	0	0.0
KCl Brine	bbl	0	0	0	0.0
Mud	sx	0	0	0	0.0
SBM Dril-In	bbl	0	0	0	0.0

Personnel On Board

Company	Pax
Santos	29
Transocean	62
Total	91

Casing

OD	L.O.T. / F.I.T.	Csg Shoe (MD/TVD)	Cementing
20 "	/	/	
30 "	0ppg / 0ppg	191.0m / 191.0m	
13 3/8"	/	/	
9 5/8"	/	/	

HSE Summary

Events	Date of Last	Days Since	Remarks
Abandon Drill	08 Oct 2004	6 Days	Weekly abandon rig drill.
BOP Test	08 Oct 2004	6 Days	Carried out 15000psi body test on BOP's. Tested all rams etc to 7500psi
Environmental Incident		0 Days	
Fire Drill	10 Oct 2004	4 Days	Simulated fire in Purifier room
First Aid		0 Days	
Lost Time Incident		0 Days	None
Safety Meeting	10 Oct 2004	4 Days	
Stop Cards	14 Oct 2004	0 Days	Man caught running on deck, informed to slow down and walk.

Marine

Weather check on 14 Oct 2004 at 00:00

Visibility	Wind Speed	Wind Dir.	Pressure	Air Temp.	Wave Height	Wave Dir.	Wave Period
10.00nm	30.0kn	270deg	1014bar	11.4C°	0m	000deg	0ft/sec

Roll	Pitch	Heave	Swell Height	Swell Dir.	Swell Period	Weather Comments
1.1deg	1.3deg	2.50m	3.4m	280deg	11.0ft/sec	

Rig Dir.	Ris. Tension	VDL	Comments
216.0deg	0klb	0klb	

Boats	Arrived (date/time)	Departed (date/time)	Status	Bulks		
Lady Caroline				**Item**	**Unit**	**Quantity**
Lady Astrid	06:00			**Item**	**Unit**	**Quantity**

Santos

DRILLING MORNING REPORT # 8
CALLISTER 01 (15 Oct 2004)

From : B.Houston / P. King

Well Data

Country	Australia	M. Depth	501.0m	Cur. Hole Size	17.500in	AFE Cost	
Field	Otway Basin	TVD	501.0m	Casing OD	30.000in	AFE No.	
Drill Co.	Transocean	Progress	309.0m	Shoe TVD	192.0m	Daily Cost	
Rig	Jack Bates	Days from spud	2.50	F.I.T. / L.O.T.	0ppg / 0ppg	Cum Cost	
Wtr Dpth(LAT)	129.4m	Days on well	8.00			Planned TD	3629.0m
RT-ASL(LAT)	29.0m	Current Op @ 0600	Drilling ahead @ 593m				
RT-ML	158.4m	Planned Op	Drill ahead to section TD @ 790 m. Circulate hole clean, displace to PHG mud and spot an inhibitive pill on bottom. POH and run 13-3/8" casing.				

Summary of Period 0000 to 2400 Hrs

Drilled out cement to 187m, repaired mud pump #2, drilled out 20" float shoe and drilled ahead 17.5" hole to 501m.

Operations For Period 0000 Hrs to 2400 Hrs on 15 Oct 2004

Phse	Cls (RC)	Op	From	To	Hrs	Depth	Activity Description
CH	P	TI	0000	0015	0.25	192.0m	RIH and Tag Top of Cement @ 185m tide corrected
CH	P	OA	0015	0200	1.75	192.0m	Weatherford install control cables on travelling block assy for casing elevator and slips safety system (ISIS)
CH	P	DC	0200	0230	0.50	192.0m	Drill cement f/ 185m to 187m
CH	TP (MIS)	RR	0230	0815	5.75	192.0m	Intermittent Alarms on #3 mud pump then #2 mud pump whilst drilling cement. Trouble shoot and fix problem before drilling out shoe into O.Hole #2 Mud pump oil lube pump starving removed hoses and attempt to clear blockage. Removed Back cover from power end and found large rag in sump. Drain oil and rag fibres, flush out lubricating system
CH	P	DFS	0815	0930	1.25	192.0m	Drill out shoe f/ 187m to 192m
SH	P	DA	0930	1200	2.50	241.0m	Drilled 2m of new 17.5" hole and worked through shoe 3 times. Drilled to 241m taking surveys as required. Spot 75 bbls Hi-Vis around BHA on connections. (Survey 1 deg @ 220 m)
SH	P	DA	1200	2400	12.00	501.0m	Continued to drill 17.5" hole from 241m to 501m. Pumped 50 bbl sweep each half stand & spotted 50 bbl sweep around BHA on connections. Survey at each connection.

Operations For Period 0000 Hrs to 0600 Hrs on 16 Oct 2004

Phse	Cls (RC)	Op	From	To	Hrs	Depth	Activity Description
SH	P	DA	0000	0600	6.00	593.0m	Drill 17.5" Hole from 501 M to 593 M, Pumped 50 bbls sweep each half stand & spotted 50 bbls around BHA on connections, Survey at 590 M 1 deg. No Drag.

Phase Data to 2400hrs, 15 Oct 2004

Phase	Phase Hrs	Start On	Finish On	Cum Hrs	Cum Days	Max Depth
RIG MOVE/RIG-UP(RM)	92.5	08 Oct 2004	12 Oct 2004	92.50	3.854 days	0m
PRESPUD(PS)	25	12 Oct 2004	13 Oct 2004	117.50	4.896 days	158.0m
SURFACE CASING(SC)	29.5	13 Oct 2004	14 Oct 2004	147.00	6.125 days	192.0m
SURFACE HOLE(SH)	21	13 Oct 2004	15 Oct 2004	168.00	7.000 days	501.0m
CONDUCTOR HOLE(CH)	9.5	15 Oct 2004	15 Oct 2004	177.50	7.396 days	192.0m

WBM Data

Mud Type:	Spud Mud	API FL:	0cm³/30m	Cl:	0	Solids:	0	Viscosity:	120sec/qt
Sample-From:		Filter-Cake:	0/32nd"	K+C*1000:	0%	H2O:	0%	PV:	0cp
Time:		HTHP-FL:	0cm³/30m	Hard/Ca:	40	Oil:	0%	YP:	0lb/100ft²
Weight:	8.70ppg	HTHP-Cake:	0/32nd"	MBT:	0	Sand:		Gels 10s:	0
Temp:	0C°			PM:	0	pH:	9.1	Gels 10m:	0
				PF:	0	PHPA:	0ppb	Fann 003:	0
								Fann 006:	0
								Fann 100:	0
								Fann 200:	0
								Fann 300:	0
								Fann 600:	0

Comment: Continue to build additional spud mud.
Drill ahead. Increase sweep volume to 100 bbls/stand. Av ROP 20m/hr

Bit # 2

Wear	I	O1	D	L	B	G	O2	R

Size (''):	17.50in	IADC#	115	**Nozzles**		**Drilled over last 24 hrs**		**Calculated over Bit Run**	
Mfr:	REED	WOB(avg)	15.0klb	No.	Size	Progress	309.0m	Cum. Progress	309.0m
Type:	Rock	RPM(avg)	115	1	20/32nd"	On Bottom Hrs	10.50h	Cum. On Btm Hrs	10.50h
Serial No.:	A98111	F.Rate	1041gpm	3	22/32nd"	IADC Drill Hrs	20.80h	Cum IADC Drill Hrs	20.80h
Bit Model	T11	SPP	2170psi			Total Revs	0	Cum Total Revs	0
Depth In	192.0m	TFA	1.420			ROP(avg)	29.43 m/hr	ROP(avg)	29.43 m/hr
Depth Out	0m								

BHA # 2

Weight(Wet)	78.0klb	Length	275.1m	Torque(max)	0ft-lbs	D.C. (1) Ann Velocity
Wt Below Jar(Wet)	0klb	String	230.0klb	Torque(Off.Btm)	0ft-lbs	D.C. (2) Ann Velocity
		Pick-Up	230.0klb	Torque(On.Btm)	0ft-lbs	H.W.D.P. Ann Velocity
		Slack-Off	230.0klb			D.P. Ann Velocity

BHA Run Description: 17 1/2" Bit, Bit sub(Solid float), 9 1/2" Anderdrift, X-O, 9 1/2" Pony DC, (totco)17 1/2" STab, 9 1/2" DC, 17 1/2" Stab, 9 1/2" DC, 9 1/2" DC, X-O, 8x8" DC, Jar, 2x8" DC, Accelerator, 1x8" DC, X-O, 12x 5" HWDP.

BHA # 1

Weight(Wet)	62.0klb	Length	202.0m	Torque(max)	3ft-lbs	D.C. (1) Ann Velocity
Wt Below Jar(Wet)	0klb	String	200.0klb	Torque(Off.Btm)	1ft-lbs	D.C. (2) Ann Velocity
		Pick-Up	200.0klb	Torque(On.Btm)	2ft-lbs	H.W.D.P. Ann Velocity
		Slack-Off	200.0klb			D.P. Ann Velocity

BHA Run Description: 26", 36" Hole Opener, FS, AnderDrift, X-O, 17-1/2"Stab, 1x9-1/2"DC, 17-1/2"Stab, 2x9-1/2"DC, X-O, 5x8"DC, X-O, 12x5"HW.

Survey

MD (m)	Incl Deg (deg)	Corr. Az (deg)	TVD (m)	'V' Sect (m)	Dogleg (deg/30m)	N/S (m)	E/W (m)	Tool Type
385.00	1.00	0	0	0	0	0	0	Anderdrift
414.00	1.00	0	0	0	0	0	0	Anderdrift
446.00	1.00	0	0	0	0	0	0	Anderdrift
471.00	1.50	0	0	0	0	0	0	Anderdrift

Bulk Stocks

Name	Unit	In	Used	Adjust	Balance
Fuel	MT	0	11	0	694.0
Drill Water	MT	0	105	-474	265.0
Potable Water	MT	0	25	127	336.0
Gel	MT	0	14	0	104.0
Cement	MT	0	0	9	189.0
Barite	MT	0	0	0	211.0
Base Olefin	bbl	0	0	0	0.0
HTB cement	ft3	0	0	0	0.0
SBM	bbl	0	0	0	0.0
PreMix SBM	bbl	0	0	0	0.0
Helifuel	Litres	0	0	0	0.0
KCl Brine	bbl	0	0	0	0.0
Mud	sx	0	0	0	0.0
SBM Dril-In	bbl	0	0	0	0.0

Personnel On Board

Company	Pax
Santos	28
Transocean	62
Total	90

Casing

OD	L.O.T. / F.I.T.	Csg Shoe (MD/TVD)	Cementing
20 "	/	/	
30 "	0ppg / 0ppg	191.0m / 191.0m	
13 3/8"	/	/	
9 5/8"	/	/	

HSE Summary

Events	Date of Last	Days Since	Remarks
Abandon Drill	08 Oct 2004	7 Days	Weekly abandon rig drill.
BOP Test	08 Oct 2004	7 Days	Carried out 15000psi body test on BOP's. Tested all rams etc to 7500psi
Environmental Incident		0 Days	
Fire Drill	10 Oct 2004	5 Days	Simulated fire in Purifier room
First Aid		0 Days	
Lost Time Incident		0 Days	None
Safety Meeting	10 Oct 2004	5 Days	
Stop Cards	14 Oct 2004	1 Day	Man caught running on deck, informed to slow down and walk.

Marine

Weather check on 15 Oct 2004 at 00:00

Visibility	Wind Speed	Wind Dir.	Pressure	Air Temp.	Wave Height	Wave Dir.	Wave Period
10.00nm	14.0kn	250deg	1022bar	10.6C°	0m	000deg	0ft/sec

Roll	Pitch	Heave	Swell Height	Swell Dir.	Swell Period	Weather Comments
0.6deg	0.8deg	1.80m	3.0m	260deg	11.0ft/sec	

Rig Dir.	Ris. Tension	VDL	Comments
216.0deg	0klb	9001.0klb	

Boats	Arrived (date/time)	Departed (date/time)	Status	Bulks		
Lady Caroline				**Item**	**Unit**	**Quantity**
Lady Astrid	06:00			**Item**	**Unit**	**Quantity**

Santos

DRILLING MORNING REPORT # 9
CALLISTER 01 (16 Oct 2004)

From : B.Houston / P. King

Well Data

Country	Australia	M. Depth	787.5m	Cur. Hole Size	17.500in	AFE Cost	
Field	Otway Basin	TVD	787.5m	Casing OD	30.000in	AFE No.	
Drill Co.	Transocean	Progress	320.5m	Shoe TVD	192.0m	Daily Cost	
Rig	Jack Bates	Days from spud	3.50	F.I.T. / L.O.T.	0ppg / 0ppg	Cum Cost	
Wtr Dpth(LAT)	129.4m	Days on well	9.00			Planned TD	3629.0m
RT-ASL(LAT)	29.0m	Current Op @ 0600	Running 13-3/8" casing @ 61m				
RT-ML	158.4m	Planned Op	Continue running 13-3/8" casing to 778m. Cement in place. Commence running riser & BOPs.				

Summary of Period 0000 to 2400 Hrs

Drilled ahead 17.5" hole to TD @ 787.5m. Displaced hole to Hi-vis mud, spotted inhibited pill and POH.

Operations For Period 0000 Hrs to 2400 Hrs on 16 Oct 2004

Phse	Cls (RC)	Op	From	To	Hrs	Depth	Activity Description
SH	P	DA	0000	0830	8.50	643.0m	Drill 17.5" Hole from 501m to 643m, Pumped 50 bbls sweep each half stand & spotted 50 bbls around BHA on connections. No Drag.
SH	TP (RE)	DA	0830	0900	0.50	643.0m	Hydraulic leak on bottom re-track carriage due to burst fitting. Blank off fittings.
SH	P	DA	0900	1745	8.75	787.5m	Continue to drill 17.5" hole from 643m to 787.5m, Pumped 50 bbls sweep each half stand & spotted 50 bbls around BHA on connections.
SC	P	CHC	1745	1800	0.25	787.5m	Circulate hole clean and take TD survey @ 787.5m.
SC	P	CMD	1800	1845	0.75	787.5m	Displace hole to hi-vis mud and spot 40 bbl KCl pill on bottom.
SC	P	TO	1845	2045	2.00	787.5m	POH from TD to 275m
SC	P	TO	2045	2330	2.75	787.5m	Continue to POH with BHA from 275m to surface. (ROV jetted wellhead at 22:15)
SC	P	PLD	2330	2400	0.50	787.5m	Change elevators, break out bit & lay down Anderdrift / Stabiliser / Pony DC

Operations For Period 0000 Hrs to 0600 Hrs on 17 Oct 2004

Phse	Cls (RC)	Op	From	To	Hrs	Depth	Activity Description
SC	P	PLD	0000	0030	0.50	787.5m	Continue to lay out Anderdrift / Stab / Pony
SC	P	CRF	0030	0100	0.50	787.5m	Clear excess equipment from rig floor
SC	P	RRC	0100	0345	2.75	787.5m	Rig to run 13-3/8" casing (install TAM packer hose)
SC	P	SM	0345	0400	0.25	787.5m	Hold Toolbox Meeting prior to running 13-3/8" casing
SC	P	CRN	0400	0430	0.50	787.5m	Pick up & inspect shoe joint and float joint. Run same.
SC	TP	CRN	0430	0530	1.00	787.5m	Troubleshoot elevators - 13-3/8" BTC collar hanging up on guide.
SC	P	CRN	0530	0600	0.50	787.5m	Continue running 13-3/8" casing from 24m to 61m.

Phase Data to 2400hrs, 16 Oct 2004

Phase	Phase Hrs	Start On	Finish On	Cum Hrs	Cum Days	Max Depth
RIG MOVE/RIG-UP(RM)	92.5	08 Oct 2004	12 Oct 2004	92.50	3.854 days	0m
PRESPUD(PS)	25	12 Oct 2004	13 Oct 2004	117.50	4.896 days	158.0m
CONDUCTOR HOLE(CH)	9.5	15 Oct 2004	15 Oct 2004	127.00	5.292 days	192.0m
SURFACE HOLE(SH)	38.75	13 Oct 2004	16 Oct 2004	165.75	6.906 days	787.5m
SURFACE CASING(SC)	35.75	13 Oct 2004	16 Oct 2004	201.50	8.396 days	787.5m

WBM Data

Mud Type:	Spud Mud	API FL:	0cm³/30m	Cl:	0	Solids:	0	Viscosity:	150sec/qt
Sample-From:		Filter-Cake:	0/32nd"	K+C*1000:	0%	H2O:	0%	PV:	0cp
Time:		HTHP-FL:	0cm³/30m	Hard/Ca:	40	Oil:	0%	YP:	0lb/100ft²
Weight:	8.70ppg	HTHP-Cake:	0/32nd"	MBT:	0	Sand:		Gels 10s:	0
Temp:	0C°			PM:	0	pH:	9.1	Gels 10m:	0
				PF:	0	PHPA:	0ppb	Fann 003:	0
								Fann 006:	0
								Fann 100:	0
								Fann 200:	0
								Fann 300:	0
								Fann 600:	0

Comment: Continue sweeps at 50 bbls twice/stand. Displace hole with hivis at TDPrepare and spot 40 bbls KCL hivis on bottom. POOH

Bit # 2

Wear	I	O1	D	L	B	G	O2	R

Size (''):	17.50in	IADC#	115	**Nozzles**		**Drilled over last 24 hrs**	**Calculated over Bit Run**
Mfr:	REED	WOB(avg)	15.0klb	No.	Size	Progress 286.5m	Cum. Progress 595.5m
Type:	Rock	RPM(avg)	120	1	20/32nd"	On Bottom Hrs 13.80h	Cum. On Btm Hrs 24.30h
Serial No.:	A98111	F.Rate	1090gpm	3	22/32nd"	IADC Drill Hrs 17.40h	Cum IADC Drill Hrs 38.20h
Bit Model	T11	SPP	2606psi			Total Revs 171740	Cum Total Revs 171740
Depth In	192.0m	TFA	1.420			ROP(avg) 20.76 m/hr	ROP(avg) 24.51 m/hr
Depth Out	785.0m						

Bit # 1

Wear	I	O1	D	L	B	G	O2	R
	0	0	NO		0	I		TD

Size (''):	36.00in	IADC#	115	**Nozzles**		**Drilled over last 24 hrs**	**Calculated over Bit Run**
Mfr:	SMITH	WOB(avg)	2.0klb	No.	Size	Progress 34.0m	Cum. Progress 68.0m
Type:	Rock	RPM(avg)	105	3	24/32nd"	On Bottom Hrs 3.00h	Cum. On Btm Hrs 6.00h
Serial No.:	MR4109	F.Rate	500gpm			IADC Drill Hrs 5.00h	Cum IADC Drill Hrs 10.00h
Bit Model	DSJc	SPP	1000psi			Total Revs 0	Cum Total Revs 0
Depth In	158.4m	TFA	1.325			ROP(avg) 11.33 m/hr	ROP(avg) 11.33 m/hr
Depth Out	192.0m						

BHA # 1

Weight(Wet)	62.0klb	Length	202.0m	Torque(max)	3ft-lbs	D.C. (1) Ann Velocity
Wt Below Jar(Wet)	0klb	String	200.0klb	Torque(Off.Btm)	1ft-lbs	D.C. (2) Ann Velocity
		Pick-Up	200.0klb	Torque(On.Btm)	2ft-lbs	H.W.D.P. Ann Velocity
		Slack-Off	200.0klb			D.P. Ann Velocity

BHA Run Description: 26", 36" Hole Opener, FS, AnderDrift, X-O, 17-1/2"Stab, 1x9-1/2"DC, 17-1/2"Stab, 2x9-1/2"DC, X-O, 5x8"DC, X-O, 12x5"HW.

BHA # 2

Weight(Wet)	78.0klb	Length	275.1m	Torque(max)	0ft-lbs	D.C. (1) Ann Velocity
Wt Below Jar(Wet)	0klb	String	230.0klb	Torque(Off.Btm)	0ft-lbs	D.C. (2) Ann Velocity
		Pick-Up	230.0klb	Torque(On.Btm)	0ft-lbs	H.W.D.P. Ann Velocity
		Slack-Off	230.0klb			D.P. Ann Velocity

BHA Run Description: 17 1/2" Bit, Bit sub(Solid float), 9 1/2" Anderdrift, X-O, 9 1/2" Pony DC, (totco)17 1/2" STab, 9 1/2" DC, 17 1/2" Stab, 9 1/2" DC, 9 1/2" DC, X-O, 8x8" DC, Jar, 2x8" DC, Accelerator, 1x8" DC, X-O, 12x 5" HWDP.

Survey

MD (m)	Incl Deg (deg)	Corr. Az (deg)	TVD (m)	'V' Sect (m)	Dogleg (deg/30m)	N/S (m)	E/W (m)	Tool Type
701.00	1.00	0	0	0	0	0	0	Anderdrift
728.00	0.50	0	0	0	0	0	0	Anderdrift
756.00	1.00	0	0	0	0	0	0	Anderdrift
787.50	1.00	0	0	0	0	0	0	Anderdrift

Bulk Stocks

Name	Unit	In	Used	Adjust	Balance
Fuel	MT	214	15	0	893.0
Drill Water	MT	400	59	0	606.0
Potable Water	MT	0	26	0	310.0
Gel	MT	0	3	0	101.0
Cement	MT	0	0	0	189.0
Barite	MT	0	5	0	206.0
Base Olefin	bbl	0	0	0	0.0
HTB cement	ft3	0	0	0	0.0
SBM	bbl	0	0	0	0.0
PreMix SBM	bbl	0	0	0	0.0
Helifuel	Litres	0	0	0	0.0
KCl Brine	bbl	0	0	0	0.0
Mud	sx	0	0	0	0.0
SBM Dril-In	bbl	0	0	0	0.0

Personnel On Board

Company	Pax
Santos	26
Transocean	61
Total	87

Casing

OD	L.O.T. / F.I.T.	Csg Shoe (MD/TVD)	Cementing
20 "	/	/	
30 "	0ppg / 0ppg	191.0m / 191.0m	
13 3/8"	/	/	
9 5/8"	/	/	

HSE Summary

Events	Date of Last	Days Since	Remarks
Abandon Drill	08 Oct 2004	8 Days	Weekly abandon rig drill.
BOP Test	08 Oct 2004	8 Days	Carried out 15000psi body test on BOP's. Tested all rams etc to 7500psi
Environmental Incident		0 Days	
Fire Drill	10 Oct 2004	6 Days	Simulated fire in Purifier room
First Aid		0 Days	
Lost Time Incident		0 Days	None
Safety Meeting	10 Oct 2004	6 Days	
Stop Cards	14 Oct 2004	2 Days	Man caught running on deck, informed to slow down and walk.

Marine

Weather check on 16 Oct 2004 at 00:00

Visibility	Wind Speed	Wind Dir.	Pressure	Air Temp.	Wave Height	Wave Dir.	Wave Period
10.00nm	16.0kn	100deg	1019bar	12.7C°	0m	000deg	0ft/sec

Roll	Pitch	Heave	Swell Height	Swell Dir.	Swell Period	Weather Comments
0.4deg	0.5deg	0.80m	1.5m	190deg	10.0ft/sec	

Rig Dir.	Ris. Tension	VDL	Comments
216.0deg	0klb	8263.0klb	

Boats	Arrived (date/time)	Departed (date/time)	Status	Bulks		
Lady Caroline				**Item**	**Unit**	**Quantity**
Lady Astrid	06:00			**Item**	**Unit**	**Quantity**

Santos

DRILLING MORNING REPORT # 10
CALLISTER 01 (17 Oct 2004)

From : B.Houston / P. King

Well Data

Country	Australia	M. Depth	787.5m	Cur. Hole Size	17.500in	AFE Cost	
Field	Otway Basin	TVD	787.5m	Casing OD	13.375in	AFE No.	
Drill Co.	Transocean	Progress	286.5m	Shoe TVD	778.0m	Daily Cost	
Rig	Jack Bates	Days from spud	4.50	F.I.T. / L.O.T.	0ppg / 0ppg	Cum Cost	
Wtr Dpth(LAT)	129.4m	Days on well	10.01			Planned TD	3629.0m
RT-ASL(LAT)	29.0m	Current Op @ 0600	Rig up to run riser				
RT-ML	158.4m	Planned Op	Rig to run & run riser and BOPs.				

Summary of Period 0000 to 2400 Hrs

Rig to run & run 13-3/8" casing. Cemented casing as per program. Commenced rig up for running riser & BOPs. Broke out and layed down cement head while troubleshooting fault in driller's control panel.

Operations For Period 0000 Hrs to 2400 Hrs on 17 Oct 2004

Phse	Cls (RC)	Op	From	To	Hrs	Depth	Activity Description
SC	P	PLD	0000	0030	0.50	787.5m	Continue to lay out Anderdrift / Stab / Pony
SC	P	CRF	0030	0100	0.50	787.5m	Clear excess equipment from rig floor
SC	P	RRC	0100	0345	2.75	787.5m	Rig to run 13-3/8" casing (install TAM packer hose)
SC	P	SM	0345	0400	0.25	787.5m	Hold Toolbox Meeting prior to running 13-3/8" casing
SC	P	CRN	0400	0430	0.50	787.5m	Pick up & inspect shoe joint and float joint. Run same.
SC	TP (VE)	CRN	0430	0530	1.00	787.5m	Troubleshoot elevators - 13-3/8" BTC collar hanging up on guide.
SC	P	CRN	0530	0715	1.75	787.5m	Continue running 13-3/8" casing from 24m to 149m.
SC	P	SKR	0715	0730	0.25	787.5m	Skid rig over well & compensate through 36" housing. (HTBT whilst skidding rig)
SC	P	CRN	0730	1130	4.00	787.5m	Continue to run 13-3/8" casing from 149m to 611m
SC	P	CRN	1130	1200	0.50	787.5m	Rig up handling equipment for 13-3/8" casing hanger
SC	P	CRN	1200	1245	0.75	787.5m	Pick up and make up 13-3/8" casing hanger and RIH from 611m to 623m
SC	P	CRN	1230	1415	1.75	787.5m	Rig up handling equipment for 5" HWDP & RIH on HWDP from 623m to 759m
SC	P	CMC	1415	1445	0.50	787.5m	Make up cement stand and land out with 50k down. Take 50k overpull. Slack off to landing string weight.
SC	P	CMC	1445	1515	0.50	787.5m	Break circulation with rig pumps @ 87 spm = 548 psi. Total 215 bbls mud.
SC	P	CMC	1515	1530	0.25	787.5m	Confirm line up to cement unit and pressure test surface lines to 3000psi. (Good test)
SC	P	CMC	1530	1800	2.50	787.5m	Dropped bottom wiper dart. Pumped 20 bbls seawater w/dye (7.7bbls to shear bottom plug) followed by 411 bbls of 12.5 ppg G Lead Slurry & 75.2 bbls of 15.8ppg G Tail Slurry. Dropped top wiper dart and followed with 2 bbls of cement and 3 bbls of seawater to shear the top plug. Displaced with 295 bbls seawater (theoretical + 1/2 shoe track volume as no bump was observed). Floats held OK.
SC	P	CMC	1800	1815	0.25	787.5m	Release running tool and POH 19m
SC	P	CMC	1815	1845	0.50	787.5m	Skid rig 20m FWD and continue the POH from 145m to surface.
SC	P	CMC	1845	1930	0.75	787.5m	Break out running tool, pup joints and plug launcher and lay out same.
IH	P	SM	1930	2000	0.50	787.5m	Hold toolbox meeting prior to rig up for Riser & BOP
IH	P	RR1	2000	2300	3.00	787.5m	Commence rig up to run riser & BOP
IH	TP (RE)	RR1	2300	2400	1.00	787.5m	Hold toolbox meeting and rig down riser & BOP running equipment. (Prepare to break out and lay down cement head and 12-1/4" BHA while troubleshooting fault in driller's control panel)

Phase Data to 2400hrs, 17 Oct 2004

Phase	Phase Hrs	Start On	Finish On	Cum Hrs	Cum Days	Max Depth
RIG MOVE/RIG-UP(RM)	92.5	08 Oct 2004	12 Oct 2004	92.50	3.854 days	0m
PRESPUD(PS)	25	12 Oct 2004	13 Oct 2004	117.50	4.896 days	158.0m
CONDUCTOR HOLE(CH)	9.5	15 Oct 2004	15 Oct 2004	127.00	5.292 days	192.0m
SURFACE HOLE(SH)	38.75	13 Oct 2004	16 Oct 2004	165.75	6.906 days	787.5m
SURFACE CASING(SC)	55.5	13 Oct 2004	17 Oct 2004	221.25	9.219 days	787.5m
INTERMEDIATE HOLE(IH)	4.5	17 Oct 2004	17 Oct 2004	225.75	9.406 days	787.5m

WBM Data

Mud Type:	Spud Mud	API FL:	0cm³/30m	Cl:	0	Solids:	0	Viscosity:	150sec/qt
Sample-From:		Filter-Cake:	0/32nd"	K+C*1000:	0%	H2O:	0%	PV:	0cp
Time:		HTHP-FL:	0cm³/30m	Hard/Ca:	40	Oil:	0%	YP:	0lb/100ft²
Weight:	8.70ppg	HTHP-Cake:	0/32nd"	MBT:	0	Sand:		Gels 10s:	0
Temp:	0C°			PM:	0	pH:	9.1	Gels 10m:	0
				PF:	0	PHPA:	0ppb	Fann 003:	0
								Fann 006:	0
								Fann 100:	0
								Fann 200:	0
								Fann 300:	0
								Fann 600:	0

Comment: Run 13 3/8" and cement. Flush and clean pits.

Bit # 2

Wear	I	O1	D	L	B	G	O2	R
	4	4	WT	A	4	1	NO	TD

Size (''):	17.50in	IADC#	115	**Nozzles**		**Drilled over last 24 hrs**	**Calculated over Bit Run**
Mfr:	REED	WOB(avg)	15.0klb	No.	Size	Progress 286.5m	Cum. Progress 882.0m
Type:	Rock	RPM(avg)	120	1	20/32nd"	On Bottom Hrs 13.80h	Cum. On Btm Hrs 38.10h
Serial No.:	A98111	F.Rate	1090gpm	3	22/32nd"	IADC Drill Hrs 17.40h	Cum IADC Drill Hrs 55.60h
Bit Model	T11	SPP	2606psi			Total Revs 0	Cum Total Revs 171740
Depth In	192.0m	TFA	1.420			ROP(avg) 20.76 m/hr	ROP(avg) 23.15 m/hr
Depth Out	785.0m						

BHA # 2

Weight(Wet)	78.0klb	Length	275.1m	Torque(max)	0ft-lbs	D.C. (1) Ann Velocity
Wt Below Jar(Wet)	0klb	String	230.0klb	Torque(Off.Btm)	0ft-lbs	D.C. (2) Ann Velocity
		Pick-Up	230.0klb	Torque(On.Btm)	0ft-lbs	H.W.D.P. Ann Velocity
		Slack-Off	230.0klb			D.P. Ann Velocity

BHA Run Description: 17 1/2" Bit, Bit sub(Solid float), 9 1/2" Anderdrift, X-O, 9 1/2" Pony DC, (totco)17 1/2" STab, 9 1/2" DC, 17 1/2" Stab, 9 1/2" DC, 9 1/2" DC, X-O, 8x8" DC, Jar, 2x8" DC, Accelerator, 1x8" DC, X-O, 12x 5" HWDP.

Survey

MD (m)	Incl Deg (deg)	Corr. Az (deg)	TVD (m)	'V' Sect (m)	Dogleg (deg/30m)	N/S (m)	E/W (m)	Tool Type
701.00	1.00	0	0	0	0	0	0	Anderdrift
728.00	0.50	0	0	0	0	0	0	Anderdrift
756.00	1.00	0	0	0	0	0	0	Anderdrift
787.50	1.00	0	0	0	0	0	0	Anderdrift

Bulk Stocks

Name	Unit	In	Used	Adjust	Balance
Fuel	MT	0	10	0	883.0
Drill Water	MT	620	197	-150	879.0
Potable Water	MT	0	24	0	286.0
Gel	MT	0	0	0	101.0
Cement	MT	0	60	0	129.0
Barite	MT	0	0	0	206.0
Base Olefin	bbl	0	0	0	0.0
HTB cement	ft3	0	0	0	0.0
SBM	bbl	0	0	0	0.0
PreMix SBM	bbl	0	0	0	0.0
Helifuel	Litres	0	0	0	0.0
KCl Brine	bbl	0	0	0	0.0
SBM Dril-In	bbl	0	0	0	0.0

Personnel On Board

Company	Pax
Santos	4
Transocean	61
Anadrill	3
BHI	2
BHI - INTEQ	3
Dril-Quip	1
Halliburton	2
M.I	2
Weatherford	3
Subsea 7	6
Total	87

Casing

OD	L.O.T. / F.I.T.	Csg Shoe (MD/TVD)	Cementing
20 "	/	/	
30 "	0ppg / 0ppg	191.0m / 191.0m	
13 3/8"	0ppg / 0ppg	778.3m / 778.3m	
9 5/8"	/	/	

HSE Summary

Events	Date of Last	Days Since	Remarks
Abandon Drill	08 Oct 2004	9 Days	Weekly abandon rig drill.
BOP Test	08 Oct 2004	9 Days	Carried out 15000psi body test on BOP's. Tested all rams etc to 7500psi
Environmental Incident		0 Days	
Fire Drill	10 Oct 2004	7 Days	Simulated fire in Purifier room
First Aid		0 Days	
Lost Time Incident		0 Days	None
Safety Meeting	10 Oct 2004	7 Days	
Stop Cards	14 Oct 2004	3 Days	Man caught running on deck, informed to slow down and walk.

Marine

Weather check on 17 Oct 2004 at 24:00

Visibility	Wind Speed	Wind Dir.	Pressure	Air Temp.	Wave Height	Wave Dir.	Wave Period
10.00nm	17.0kn	130deg	1023bar	12.8C°	0m	000deg	0ft/sec

Roll	Pitch	Heave	Swell Height	Swell Dir.	Swell Period	Weather Comments
0.2deg	0.2deg	0.50m	1.2m	130deg	4.0ft/sec	

Rig Dir.	Ris. Tension	VDL	Comments
216.0deg	0klb	8195.0klb	

Boats	Arrived (date/time)	Departed (date/time)	Status	Bulks		
Lady Astrid	06:00		Portland	**Item**	**Unit**	**Quantity**
Lady Caroline			Standby at rig	**Item**	**Unit**	**Quantity**

Santos

DRILLING MORNING REPORT # 11
CALLISTER 01 (18 Oct 2004)

From : B.Houston / P. King

Well Data

Country	Australia	M. Depth	787.5m	Cur. Hole Size	17.500in	AFE Cost	
Field	Otway Basin	TVD	787.5m	Casing OD	13.375in	AFE No.	
Drill Co.	Transocean	Progress	0m	Shoe TVD	778.0m	Daily Cost	
Rig	Jack Bates	Days from spud	5.50	F.I.T. / L.O.T.	0ppg / 0ppg	Cum Cost	
Wtr Dpth(LAT)	129.4m	Days on well	11.00			Planned TD	3629.0m
RT-ASL(LAT)	29.0m	Current Op @ 0600	Rigging down riser running gear.				
RT-ML	158.4m	Planned Op	Rig down riser running gear. Rig up divertor. Run wear bushing. Make up 12-1/4" BHA and RIH for drill out and LOT.				

Summary of Period 0000 to 2400 Hrs

Rigged up to run riser and BOPs. Rectified fault in driller's BOP control panel. Function tested rams & annular. Repaired & installed BX elevators. Lowered BOPs into splash zone and pressure tested kill and choke lines. Ran riser, latched BOPs, pressure tested connector and 13-3/8" casing.

Operations For Period 0000 Hrs to 2400 Hrs on 18 Oct 2004

Phse	Cls (RC)	Op	From	To	Hrs	Depth	Activity Description
IH	TP (RE)	HBHA	0000	0200	2.00	787.5m	Installed elevators / bails & layed down excess BHA from derrick while troubleshooting drillers BOP control panel fault.
IH	TP (RE)	RR1	0200	0230	0.50	787.5m	Rigged up to run riser and BOPs after rectifying control panel fault.
IH	TP (RE)	BOP	0230	0600	3.50	787.5m	Continued to rig up riser & BOP equipment. Function tested rams & annular from rig floor & toolpushers panels plus failsafes on yellow & blue pods.
IH	TP (RE)	RR1	0600	0815	2.25	787.5m	Repaired BX elevators and installed same
IH	P	SM	0815	0830	0.25	787.5m	Held toolbox meeting prior to picking up riser from deck
IH	P	RR1	0830	0945	1.25	787.5m	Picked up riser from deck, made up double and picked up clear of moonpool
IH	P	RR1	0945	1215	2.50	787.5m	Prepared BOPs and skidded to below rotary table. Made up double of riser to BOPs and carried out final checks.
IH	P	RR1	1215	1345	1.50	787.5m	Lowered BOPs into splash zone, installed walkways and attached Mux clamps @ 50 m.
IH	P	RR1	1345	1615	2.50	787.5m	Continued to run riser from 50 m to 101 m.
IH	P	RR1	1615	1715	1.00	787.5m	Pressure tested kill and choke lines to 200 psi (5 mins) and 5000 psi (10 mins). Pressure tested rigid conduit/riser boost lines to 250 psi (5 mins) and 3000 psi (10 mins). All tests good. Rigged down test equipment.
IH	P	RR1	1715	1900	1.75	787.5m	Ran riser termination and spacer joints from 101 m to 122 m.
IH	P	RR1	1900	2145	2.75	787.5m	Installed drape hoses to termination joint
IH	P	RR1	2145	2215	0.50	787.5m	Pressure tested choke and kill lines to 250 psi (5 mins) and 5000 psi (10 mins)
IH	P	RR1	2215	2300	0.75	787.5m	Installed saddle on termination joint and secured hotline and Mux lines. Reeled off storm lines.
IH	P	RR1	2300	2400	1.00	787.5m	Picked up and made up riser slip joint.

Operations For Period 0000 Hrs to 0600 Hrs on 19 Oct 2004

Phse	Cls (RC)	Op	From	To	Hrs	Depth	Activity Description
IH	P	RR1	0000	0015	0.25	787.5m	Picked up and made up riser landing joint
IH	P	RR1	0015	0045	0.50	787.5m	Spaced out to engage KT ring support dogs (support frame for riser)
IH	P	RR1	0045	0100	0.25	787.5m	Confirmed engagement of KT ring with 20K overpull
IH	P	BOP	0100	0230	1.50	787.5m	Skidded rig to align BOPs with guideposts and landed BOPs with 100K down.
IH	P	BOP	0230	0245	0.25	787.5m	Attempted to lock Vetco H4 HD wellhead connector with 1400 psi. (Only half travel on locking indicator)
IH	P	BOP	0245	0330	0.75	787.5m	Flushed rigid conduit line with fluorescent dye and re-functioned wellhead latch using rigid conduit (higher fluid volume). Increased operating pressure to 1650 psi. (Still only half travel on locking indicator)
IH	P	BOP	0330	0400	0.50	787.5m	Functioned wellhead latch with 2000 psi. Confirmed H4 HD connector was locked with 60k overpull.
IH	P	BOP	0400	0545	1.75	787.5m	Filled riser with seawater, pressure tested wellhead connector and 13-3/8" casing to 250 psi [10 mins] and 3000 psi [10 mins] (3.2 bbls pumped). All OK.
IH	P	RR1	0545	0600	0.25	787.5m	Removed slip joint lock plates and nippled up control hoses.

Phase Data to 2400hrs, 18 Oct 2004

Phase	Phase Hrs	Start On	Finish On	Cum Hrs	Cum Days	Max Depth
RIG MOVE/RIG-UP(RM)	92.5	08 Oct 2004	12 Oct 2004	92.50	3.854 days	0m
PRESPUD(PS)	25	12 Oct 2004	13 Oct 2004	117.50	4.896 days	158.0m
CONDUCTOR HOLE(CH)	9.5	15 Oct 2004	15 Oct 2004	127.00	5.292 days	192.0m
SURFACE HOLE(SH)	38.75	13 Oct 2004	16 Oct 2004	165.75	6.906 days	787.5m
SURFACE CASING(SC)	55.25	13 Oct 2004	17 Oct 2004	221.00	9.208 days	787.5m
INTERMEDIATE HOLE(IH)	28.5	17 Oct 2004	18 Oct 2004	249.50	10.396 days	787.5m

WBM Data

Mud Type: KCL/PHPA/POLYMER	API FL:	0cm³/30m	Cl:	0	Solids:	0	Viscosity: 150sec/qt
Sample-From:	Filter-Cake:	0/32nd"	K+C*1000:	0%	H2O:	0%	PV: 0cp
Time:	HTHP-FL:	0cm³/30m	Hard/Ca:	40	Oil:	0%	YP: 0lb/100ft²
Weight: 8.70ppg	HTHP-Cake:	0/32nd"	MBT:	0	Sand:		Gels 10s: 0
Temp: 0C°			PM:	0	pH:	9.1	Gels 10m: 0
			PF:	0	PHPA:	0ppb	Fann 003: 0
							Fann 006: 0
							Fann 100: 0
							Fann 200: 0
							Fann 300: 0
							Fann 600: 0

Comment: Continue to build mud when possible.Run riser and stack.

Bulk Stocks

Name	Unit	In	Used	Adjust	Balance
Fuel	MT	0	9	0	874.0
Drill Water	MT	112	170	0	821.0
Potable Water	MT	150	32	0	404.0
Gel	MT	0	0	0	101.0
Cement	MT	0	0	0	129.0
Barite	MT	0	0	0	206.0

Personnel On Board

Company	Pax
Santos	4
Transocean	64
Anadrill	3
BHI	7
Dril-Quip	1
Halliburton	2
M.I	2
Weatherford	2
Subsea 7	6
Schlumberger Wireline	3
Total	94

Casing

OD	L.O.T. / F.I.T.	Csg Shoe (MD/TVD)	Cementing
30 "	0ppg / 0ppg	191.0m / 191.0m	
13 3/8"	0ppg / 0ppg	778.3m / 778.3m	

HSE Summary

Events	Date of Last	Days Since	Remarks
Abandon Drill	08 Oct 2004	10 Days	Weekly abandon rig drill.
BOP Test	08 Oct 2004	10 Days	Carried out 15000psi body test on BOP's. Tested all rams etc to 7500psi
Environmental Incident		0 Days	
Fire Drill	10 Oct 2004	8 Days	Simulated fire in Purifier room
First Aid		0 Days	
Lost Time Incident		0 Days	None
Safety Meeting	17 Oct 2004	1 Day	
Stop Cards	14 Oct 2004	4 Days	Man caught running on deck, informed to slow down and walk.

Marine

Weather check on 18 Oct 2004 at 24:00

Visibility	Wind Speed	Wind Dir.	Pressure	Air Temp.	Wave Height	Wave Dir.	Wave Period
10.00nm	15.0kn	130deg	1026bar	13.0C°	0m	000deg	0ft/sec

Roll	Pitch	Heave	Swell Height	Swell Dir.	Swell Period	Weather Comments
0.2deg	0.3deg	0.50m	0.9m	130deg	3.0ft/sec	

Rig Dir.	Ris. Tension	VDL	Comments
216.0deg	0klb	0klb	

Boats	Arrived (date/time)	Departed (date/time)	Status	Bulks		
Lady Astrid			At rig	Item	Unit	Quantity
Lady Caroline		13:30	Portland	Item	Unit	Quantity

Santos

DRILLING MORNING REPORT # 12
CALLISTER 01 (19 Oct 2004)

From : B.Houston / P. King

Well Data

Country	Australia	M. Depth	787.5m	Cur. Hole Size	17.500in	AFE Cost	
Field	Otway Basin	TVD	787.5m	Casing OD	13.375in	AFE No.	
Drill Co.	Transocean	Progress	0m	Shoe TVD	778.0m	Daily Cost	
Rig	Jack Bates	Days from spud	6.50	F.I.T. / L.O.T.	0ppg / 0ppg	Cum Cost	
Wtr Dpth(LAT)	129.4m	Days on well	12.00			Planned TD	3629.0m
RT-ASL(LAT)	29.0m	Current Op @ 0600	Running in hole with 5" drill pipe @ 466m.				
RT-ML	158.4m	Planned Op	RIH to top of cement @ 753m. Perform well control drill. Drill out cement and shoe track, then displace to mud. Drill out shoe and new formation and perform LOT. Drill ahead 12-1/4" hole.				

Summary of Period 0000 to 2400 Hrs

Latched BOPs and pressure tested connector and casing. Rigged down riser running gear. Rigged up diverter and function tested. Ran wear bushing. Commenced picking up 12-1/4" BHA.

Operations For Period 0000 Hrs to 2400 Hrs on 19 Oct 2004

Phse	Cls (RC)	Op	From	To	Hrs	Depth	Activity Description
IH	P	RR1	0000	0015	0.25	787.5m	Picked up and made up riser landing joint
IH	P	RR1	0015	0045	0.50	787.5m	Spaced out to engage KT ring support dogs (support frame for riser)
IH	P	RR1	0045	0100	0.25	787.5m	Confirmed engagement of KT ring with 20K overpull
IH	P	BOP	0100	0230	1.50	787.5m	Skidded rig to align BOPs with guideposts and landed BOPs with 100K down.
IH	P	BOP	0230	0245	0.25	787.5m	Attempted to lock Vetco H4 HD wellhead connector with 1400 psi. (Only half travel on locking indicator)
IH	P	BOP	0245	0330	0.75	787.5m	Flushed rigid conduit line with fluorescent dye and re-functioned wellhead latch using rigid conduit (higher fluid volume). Increased operating pressure to 1650 psi. (Still only half travel on locking indicator)
IH	P	BOP	0330	0400	0.50	787.5m	Functioned wellhead latch with 2000 psi. Confirmed H4 HD connector was locked with 60k overpull.
IH	P	BOP	0400	0545	1.75	787.5m	Filled riser with seawater, pressure tested wellhead connector and 13-3/8" casing to 250 psi [10 mins] and 3000 psi [10 mins] (3.2 bbls pumped) against shear rams. All OK.
IH	P	RR1	0545	0630	0.75	787.5m	Removed slip joint lock plates and nippled up control hoses.
IH	P	RR1	0630	0730	1.00	787.5m	Stroked out slip joint and checked for stroke clearance in spider. Laid out landing joint.
IH	P	RR1	0730	0830	1.00	787.5m	Changed out handling equipment for picking up diverter.
IH	P	CRF	0830	0845	0.25	787.5m	Cleared rig floor of excess equipment
IH	P	SM	0845	0900	0.25	787.5m	Held toolbox meeting prior to picking up and making up diverter.
IH	P	RR1	0900	1200	3.00	787.5m	Picked up diverter and installed. Confirmed latched with 30k overpull. Installed hoses.
IH	P	RR1	1200	1230	0.50	787.5m	Removed running tool from diverter and laid out same
IH	P	RR1	1230	1715	4.75	787.5m	Rigged down riser handling equipment and rigged up for running 5" drill pipe.
IH	P	SM	1715	1730	0.25	787.5m	Held toolbox meeting prior to picking up wear bushing and running tool.
IH	P	WH	1730	1745	0.25	787.5m	Picked up and made up wear bushing and running tool.
IH	P	WH	1745	1830	0.75	787.5m	Ran in hole with wear bushing on landing string to 156m. Landed out and took 25k overpull to release running tool. Wear bushing set.
IH	P	WH	1830	1900	0.50	787.5m	Pulled out of hole with wear bushing running tool and landing string from 156m to surface.
IH	P	RRC	1900	2130	2.50	787.5m	Made up 9-5/8" casing hanger c/w pup joint. Made up cement head c/w hose. Changed out a single of 5" HWDP to 5" Drillpipe for correct space out for BOPs.
IH	P	RS	2130	2215	0.75	787.5m	Serviced top drive system / blocks and set alignment on same.
IH	P	BOP	2215	2300	0.75	787.5m	Function tested and flushed diverter (divert port and starboard)
IH	P	HBHA	2300	2330	0.50	787.5m	Cleared excess equipment from rig floor and rigged up to pick up 12-1/4" BHA. Spotted BHA on dodge truck (hydraulic catwalk)
IH	P	HBHA	2330	2400	0.50	787.5m	Picked up 12-1/4" BHA (Anadrill motor)

Operations For Period 0000 Hrs to 0600 Hrs on 20 Oct 2004

Phse	Cls (RC)	Op	From	To	Hrs	Depth	Activity Description
IH	P	HBHA	0000	0230	2.50	787.5m	Picked up and made up 12-1/4" BHA from surface to 42m.
IH	P	HBHA	0230	0245	0.25	787.5m	Changed out elevators and bails
IH	P	HBHA	0245	0330	0.75	787.5m	Ran 12-1/4" BHA to 90m
IH	P	HBHA	0330	0400	0.50	787.5m	Surface tested MWD to 144 psi and 850 psi
IH	P	HBHA	0400	0545	1.75	787.5m	Continued to RIH with BHA from 90m to 276m
IH	P	TI	0545	0600	0.25	787.5m	Ran in hole drilling assembly on 5" S-135 drill pipe to 466m

Phase Data to 2400hrs, 19 Oct 2004

Phase	Phase Hrs	Start On	Finish On	Cum Hrs	Cum Days	Max Depth
RIG MOVE/RIG-UP(RM)	92.5	08 Oct 2004	12 Oct 2004	92.50	3.854 days	0m
PRESPUD(PS)	25	12 Oct 2004	13 Oct 2004	117.50	4.896 days	158.0m
CONDUCTOR HOLE(CH)	9.5	15 Oct 2004	15 Oct 2004	127.00	5.292 days	192.0m
SURFACE HOLE(SH)	38.75	13 Oct 2004	16 Oct 2004	165.75	6.906 days	787.5m
SURFACE CASING(SC)	55.25	13 Oct 2004	17 Oct 2004	221.00	9.208 days	787.5m
INTERMEDIATE HOLE(IH)	52.5	17 Oct 2004	19 Oct 2004	273.50	11.396 days	787.5m

WBM Data

Mud Type:	KCL/PHPA/POLYMER	API FL:	10cm³/30m	Cl:	40000	Solids:	3.5
Sample-From:	Pit 5	Filter-Cake:	1/32nd"	K+C*1000:	8%	H2O:	96.5%
Time:	04:00	HTHP-FL:	0cm³/30m	Hard/Ca:	60	Oil:	0%
Weight:	8.80ppg	HTHP-Cake:	0/32nd"	MBT:	0	Sand:	0
Temp:	80.0C°			PM:	0.4	pH:	8.7
				PF:	0.2	PHPA:	1ppb

Viscosity:	54sec/qt
PV:	15cp
YP:	20lb/100ft²
Gels 10s:	6
Gels 10m:	10
Fann 003:	10
Fann 006:	15
Fann 100:	20
Fann 200:	27
Fann 300:	35
Fann 600:	50

Comment: Add KCL and 0.7 lb/bbl PHPA to the active. Run stack.

Bulk Stocks

Name	Unit	In	Used	Adjust	Balance
Fuel	MT	0	10	0	864.0
Drill Water	MT	0	16	0	805.0
Potable Water	MT	0	28	0	376.0
Gel	MT	0	0	0	101.0
Cement	MT	0	0	0	129.0
Barite	MT	0	0	0	206.0

Personnel On Board

Company	Pax
Santos	4
Transocean	64
Anadrill	3
BHI	7
Dril-Quip	1
Halliburton	2
M.I	2
Weatherford	2
Subsea 7	6
Schlumberger Wireline	3
Total	94

Casing

OD	L.O.T. / F.I.T.	Csg Shoe (MD/TVD)	Cementing
30 "	0ppg / 0ppg	191.0m / 191.0m	
13 3/8"	0ppg / 0ppg	778.3m / 778.3m	

HSE Summary

Events	Date of Last	Days Since	Remarks
Abandon Drill	19 Oct 2004	0 Days	Weekly abandon rig drill.
BOP Test	08 Oct 2004	11 Days	Carried out 15000psi body test on BOP's. Tested all rams etc to 7500psi
Environmental Incident		0 Days	
Fire Drill	10 Oct 2004	9 Days	Simulated fire in Purifier room
First Aid		0 Days	
Lost Time Incident		0 Days	None
Safety Meeting	17 Oct 2004	2 Days	
Stop Cards	14 Oct 2004	5 Days	Man caught running on deck, informed to slow down and walk.

Marine

Weather check on 19 Oct 2004 at 24:00

Visibility	Wind Speed	Wind Dir.	Pressure	Air Temp.	Wave Height	Wave Dir.	Wave Period
10.00nm	14.0kn	090deg	1021bar	15.0C°	0m	000deg	0ft/sec

Roll	Pitch	Heave	Swell Height	Swell Dir.	Swell Period	Weather Comments
0.2deg	0.3deg	0.90m	1.2m	120deg	3.0ft/sec	

Rig Dir.	Ris. Tension	VDL	Comments
216.0deg	0klb	8223.0klb	

Boats	Arrived (date/time)	Departed (date/time)	Status	Bulks		
Lady Caroline			Portland	Item	Unit	Quantity
Lady Astrid			At rig	Item	Unit	Quantity

Santos

DRILLING MORNING REPORT # 13
CALLISTER 01 (20 Oct 2004)

From : B.Houston / P. King

Well Data

Country	Australia	M. Depth	895.0m	Cur. Hole Size	12.250in	AFE Cost	
Field	Otway Basin	TVD	895.0m	Casing OD	13.375in	AFE No.	
Drill Co.	Transocean	Progress	107.5m	Shoe TVD	778.0m	Daily Cost	
Rig	Jack Bates	Days from spud	7.50	F.I.T. / L.O.T.	0ppg / 13.20ppg	Cum Cost	
Wtr Dpth(LAT)	129.4m	Days on well	13.00			Planned TD	3629.0m
RT-ASL(LAT)	29.0m	Current Op @ 0600	Drilling ahead 12-1/4" hole at 959m.				
RT-ML	158.4m	Planned Op	Continue drilling 12-1/4" hole.				

Summary of Period 0000 to 2400 Hrs

Ran in hole 12-1/4" BHA. Surface tested motor and MWD/LWD. Drilled out shoe track and new formation. LOT. Drilled ahead 12-1/4" hole to 895m.

Operations For Period 0000 Hrs to 2400 Hrs on 20 Oct 2004

Phse	Cls (RC)	Op	From	To	Hrs	Depth	Activity Description
IH	P	HBHA	0000	0230	2.50	787.5m	Picked up and made up 12-1/4" BHA from surface to 42m.
IH	P	HBHA	0230	0245	0.25	787.5m	Changed out elevators and bails
IH	P	HBHA	0245	0330	0.75	787.5m	Ran 12-1/4" BHA to 90m
IH	P	HBHA	0330	0400	0.50	787.5m	Surface tested MWD to 144 psi and 850 psi
IH	P	HBHA	0400	0545	1.75	787.5m	Continued to RIH with BHA from 90m to 276m
IH	P	TI	0545	0600	0.25	787.5m	Ran in hole drilling assembly on 5" S-135 drill pipe to 466m
IH	P	TI	0600	0715	1.25	787.5m	Continued to run in hole 466m to 730m
IH	P	DA	0715	1200	4.75	787.5m	Broke circulation @ 730m (78 spm @ 440 psi) and washed down to TOC @ 739m. Drilled out to 760m
IH	P	ED	1200	1230	0.50	787.5m	Performed well control drill.
IH	P	DFS	1230	1330	1.00	787.5m	Drilled out shoe track from 760m to 787.5m. (Worked 3 times through shoe @ 778m)
IH	P	DA	1330	1400	0.50	790.0m	Drilled out 12-1/4" hole from 787.5m to 790m.
IH	P	CHC	1400	1430	0.50	790.0m	Circulated bottoms up @ 790m
IH	P	LOT	1430	1445	0.25	790.0m	Pulled back one stand and racked back.
IH	P	LOT	1445	1500	0.25	790.0m	Rigged up for leak off test.
IH	P	LOT	1500	1530	0.50	790.0m	Pressure tested surface lines to 830 psi (good test) Performed LOT to 13.2 ppg EMW (Surface pressure 590 psi, MW 8.8 ppg)
IH	P	LOT	1530	1545	0.25	790.0m	Rigged down LOT equipment.
IH	P	DA	1545	2200	6.25	875.0m	Ran in hole and continued drilling 12-1/4" hole from 790m to 875m, reaming and surveying at each connection.
IH	TP (RE)	DA	2200	2300	1.00	875.0m	Troubleshooted and rectified problem with SCRs.
IH	P	DA	2300	2400	1.00	787.5m	Continued to drill 12-1/4" hole from 875m to 895m, reaming and surveying at each connection.

Operations For Period 0000 Hrs to 0600 Hrs on 21 Oct 2004

Phse	Cls (RC)	Op	From	To	Hrs	Depth	Activity Description
IH	P	DA	0000	0600	6.00	875.0m	Continued to drill 12-1/4" hole from 895m to 959m, reaming and surveying each stand.

Phase Data to 2400hrs, 20 Oct 2004

Phase	Phase Hrs	Start On	Finish On	Cum Hrs	Cum Days	Max Depth
RIG MOVE/RIG-UP(RM)	92.5	08 Oct 2004	12 Oct 2004	92.50	3.854 days	0m
PRESPUD(PS)	25	12 Oct 2004	13 Oct 2004	117.50	4.896 days	158.0m
CONDUCTOR HOLE(CH)	9.5	15 Oct 2004	15 Oct 2004	127.00	5.292 days	192.0m
SURFACE HOLE(SH)	38.75	13 Oct 2004	16 Oct 2004	165.75	6.906 days	787.5m
SURFACE CASING(SC)	55.25	13 Oct 2004	17 Oct 2004	221.00	9.208 days	787.5m
INTERMEDIATE HOLE(IH)	76.5	17 Oct 2004	20 Oct 2004	297.50	12.396 days	875.0m

WBM Data

Mud Type: KCL/PHPA/POLYMER	API FL:	8cm³/30m	Cl:	38000	Solids:	0.8	Viscosity: 43sec/qt
Sample-From: 3	Filter-Cake:	1/32nd"	K+C*1000:	8%	H2O:	95.8%	PV: 12cp
Time: 21:30	HTHP-FL:	0cm³/30m	Hard/Ca:	260	Oil:	0%	YP: 15lb/100ft²
Weight: 8.80ppg	HTHP-Cake:	0/32nd"	MBT:	0	Sand:	0	Gels 10s: 6
Temp: 120.0C°			PM:	0.4	pH:	10	Gels 10m: 9
			PF:	0.2	PHPA:	1ppb	Fann 003: 6
							Fann 006: 7
							Fann 100: 14
							Fann 200: 19
							Fann 300: 27
							Fann 600: 39

Comment: Dress shakers. Treat cement contamination. Start to condition mud for low end rheology and to increase PHPA and KCL when possible. Record only LGS as solids

Bit # 3

Wear	I	O1	D	L	B	G	O2	R

Size (''):	12.25in	IADC#		Nozzles		Drilled over last 24 hrs		Calculated over Bit Run	
Mfr:	HYCALOG	WOB(avg)	10.0klb	No.	Size	Progress	107.5m	Cum. Progress	107.5m
Type:	PDC	RPM(avg)	70	9	11/32nd"	On Bottom Hrs	4.00h	Cum. On Btm Hrs	4.00h
Serial No.:	207742	F.Rate	870gpm			IADC Drill Hrs	8.50h	Cum IADC Drill Hrs	8.50h
Bit Model	DSX194HGSUW	SPP	1805psi			Total Revs	42753	Cum Total Revs	42753
Depth In	787.5m	TFA	0.835			ROP(avg)	26.88 m/hr	ROP(avg)	26.88 m/hr
Depth Out	0m								

BHA # 3

Weight(Wet)	80.0klb	Length	276.8m	Torque(max)	0ft-lbs	D.C. (1) Ann Velocity	
Wt Below Jar(Wet)	50.0klb	String	260.0klb	Torque(Off.Btm)	0ft-lbs	D.C. (2) Ann Velocity	
		Pick-Up	0klb	Torque(On.Btm)	0ft-lbs	H.W.D.P. Ann Velocity	
		Slack-Off	0klb			D.P. Ann Velocity	

BHA Run Description: Bit, X/O, Motor, Float Sub, Roller Reamer, CDR, Power Pulse, Roller Reamer, 9-1/2" NMDC, X/O, 8x8" DC, 8" Jar, 2 x 8" DC, 8" Accelerator, 1 x 8" DC, X/O, 12 x 5" HWDP

Equipment	Length	OD	ID	Serial #	Comment
9.625in Motor	9.68m	12.13in	0in	2099	A962M7848GT w/ 12-1/8" stab
Float Sub	0.90m	9.50in	3.00in	3287	Ported Float
12.25in Roller Reamer	2.52m	12.25in	2.81in	XM066	
9.5in LWD	7.20m	9.50in	0in	9546	CDR9 + PWD
9.5in MWD	8.46m	9.50in	0in	W693	Power Pulse 9
12.25in Roller Reamer	2.52m	12.25in	2.81in	XM065	
9.5in Non Magnetic Drill Collar	9.20m	9.50in	2.81in	D173	
8in Jar	9.78m	8.06in	3.00in	48907C	
8in Accelerator	10.90m	8.00in	3.00in	DAH01586	

Survey

MD (m)	Incl Deg (deg)	Corr. Az (deg)	TVD (m)	'V' Sect (m)	Dogleg (deg/30m)	N/S (m)	E/W (m)	Tool Type
847.21	0.69	337.63	847.14	0	0	0	0	

Bulk Stocks

Name	Unit	In	Used	Adjust	Balance
Fuel	MT	0	11	0	853.0
Drill Water	MT	200	84	0	921.0
Potable Water	MT	0	31	0	345.0
Gel	MT	0	0	0	101.0
Cement	MT	0	0	0	129.0
Barite	MT	0	0	0	206.0

Personnel On Board

Company	Pax
Santos	4
Transocean	63
Anadrill	3
BHI	7
Dril-Quip	1
Halliburton	2
M.I	2
Weatherford	5
Subsea 7	3
Schlumberger Wireline	3
Santos	2
Total	95

Casing

OD	L.O.T. / F.I.T.	Csg Shoe (MD/TVD)	Cementing
30 "	0ppg / 0ppg	191.0m / 191.0m	
13 3/8"	0ppg / 0ppg	778.3m / 778.3m	

HSE Summary

Events	Date of Last	Days Since	Remarks
Abandon Drill	19 Oct 2004	1 Day	Weekly abandon rig drill.
BOP Test	08 Oct 2004	12 Days	Carried out 15000psi body test on BOP's. Tested all rams etc to 7500psi
Environmental Incident		0 Days	
Fire Drill	10 Oct 2004	10 Days	Simulated fire in Purifier room
First Aid		0 Days	
Lost Time Incident		0 Days	None
Safety Meeting	17 Oct 2004	3 Days	
Stop Cards	14 Oct 2004	6 Days	Man caught running on deck, informed to slow down and walk.

Marine

Weather check on 20 Oct 2004 at 24:00

Visibility	Wind Speed	Wind Dir.	Pressure	Air Temp.	Wave Height	Wave Dir.	Wave Period
10.00nm	29.0kn	060deg	1012bar	17.0C°	0m	000deg	0ft/sec

Roll	Pitch	Heave	Swell Height	Swell Dir.	Swell Period	Weather Comments
0.2deg	0.3deg	1.00m	1.5m	060deg	3.0ft/sec	

Rig Dir.	Ris. Tension	VDL	Comments
216.0deg	0klb	8042.0klb	

Boats	Arrived (date/time)	Departed (date/time)	Status	Bulks		
Lady Astrid			On route to Portland	**Item**	**Unit**	**Quantity**
Lady Caroline			At rig	**Item**	**Unit**	**Quantity**

Santos

DRILLING MORNING REPORT # 14
CALLISTER 01 (21 Oct 2004)

From : B.Houston / P. King

Well Data

Country	Australia	M. Depth	990.0m	Cur. Hole Size	12.250in	AFE Cost	
Field	Otway Basin	TVD	990.0m	Casing OD	13.375in	AFE No.	
Drill Co.	Transocean	Progress	95.0m	Shoe TVD	778.0m	Daily Cost	
Rig	Jack Bates	Days from spud	8.50	F.I.T. / L.O.T.	0ppg / 13.20ppg	Cum Cost	
Wtr Dpth(LAT)	129.4m	Days on well	14.00			Planned TD	3629.0m
RT-ASL(LAT)	29.0m	Current Op @ 0600	Drilling ahead at 1015m.				
RT-ML	158.4m	Planned Op	Continue drilling 12-1/4" hole.				

Summary of Period 0000 to 2400 Hrs

Drilled from 895m to 990m. Tripped for bit due to low penetration rate. Ran in hole with new 12-1/4" bit.

Operations For Period 0000 Hrs to 2400 Hrs on 21 Oct 2004

Phse	Cls (RC)	Op	From	To	Hrs	Depth	Activity Description
IH	P	DA	0000	1145	11.75	990.0m	Continued to drill 12-1/4" hole from 895m to 990m, reaming and surveying each stand.
IH	P	DA	1145	1200	0.25	990.0m	Flow Checked @ 990m.
IH	P	TO	1200	1245	0.75	990.0m	Pulled out of hole from 990m to 762m due to low penetration rate.
IH	P	TO	1245	1300	0.25	990.0m	Flow checked at shoe. Well static.
IH	P	TO	1300	1315	0.25	990.0m	Continued to pull out of hole from 762m to 677m.
IH	P	TO	1315	1330	0.25	990.0m	Pumped slug at 677m
IH	P	TO	1330	1430	1.00	990.0m	Continued to pull out of hole from 677m to 276m
IH	P	HBHA	1430	1445	0.25	990.0m	Pulled out of hole with BHA from 276m to 193m.
IH	P	SM	1445	1500	0.25	990.0m	Held toolbox meeting prior to pulling out with drill collars.
IH	P	HBHA	1500	1700	2.00	990.0m	Continued to pull out of hole with BHA from 193m to 21m. Picked up double of HWDP to rack 1 x 8" Drill Collar.
IH	P	HBHA	1700	1715	0.25	990.0m	Downloaded Anadril CDR
IH	P	HBHA	1715	1730	0.25	990.0m	Continued to pull out of hole from 21m to surface. Broke out bit.
IH	P	CRF	1730	1800	0.50	990.0m	Cleared excess equipment from drill floor.
IH	P	TI	1800	2115	3.25	990.0m	Made up new 12-1/4" bit (Reed Hycalog DSX104HGW w/ 5x14 nozzles) and ran in hole from surface to 276m
IH	P	TI	2115	2130	0.25	990.0m	Filled drill string and rectified problem with flowline.
IH	P	RS	2130	2215	0.75	990.0m	Serviced top drive and blocks
IH	P	TI	2215	2300	0.75	990.0m	Tested MWD/LWD at 156 spm / 1030psi. All OK.
IH	P	TI	2300	2400	1.00	990.0m	Continued to run in hole 12-1/4" BHA on S135 drill pipe from 276m to 709m, filling pipe every 10 stands.

Operations For Period 0000 Hrs to 0600 Hrs on 22 Oct 2004

Phse	Cls (RC)	Op	From	To	Hrs	Depth	Activity Description
IH	P	TI	0000	0015	0.25	990.0m	Continued running in hole from 706m to 762m
IH	P	SC	0015	0300	2.75	990.0m	Held toolbox meeting prior to hanging off in blocks to slip & cut drill line.
IH	P	TI	0300	0500	2.00	990.0m	Continued to run in hole from 762m to 962m.
IH	P	WIN	0500	0515	0.25	990.0m	Washed down from 962m to 990m (Tagged bottom)
IH	P	DA	0515	0600	0.75	1015.0m	Drilled ahead 12-1/4" hole from 990m to 1015m, reaming and surveying at each connection.

Phase Data to 2400hrs, 21 Oct 2004

Phase	Phase Hrs	Start On	Finish On	Cum Hrs	Cum Days	Max Depth
RIG MOVE/RIG-UP(RM)	92.5	08 Oct 2004	12 Oct 2004	92.50	3.854 days	0m
PRESPUD(PS)	25	12 Oct 2004	13 Oct 2004	117.50	4.896 days	158.0m
CONDUCTOR HOLE(CH)	9.5	15 Oct 2004	15 Oct 2004	127.00	5.292 days	192.0m
SURFACE HOLE(SH)	38.75	13 Oct 2004	16 Oct 2004	165.75	6.906 days	787.5m
SURFACE CASING(SC)	55.25	13 Oct 2004	17 Oct 2004	221.00	9.208 days	787.5m
INTERMEDIATE HOLE(IH)	100.5	17 Oct 2004	21 Oct 2004	321.50	13.396 days	990.0m

WBM Data

Mud Type: KCL/PHPA/POLYMER	API FL:	8cm³/30m	Cl:	45000	Solids:	0.9	Viscosity:	46sec/qt
Sample-From: 3	Filter-Cake:	1/32nd"	K+C*1000:	8.1%	H2O:	95.6%	PV:	15cp
Time: 22:00	HTHP-FL:	0cm³/30m	Hard/Ca:	560	Oil:	0%	YP:	20lb/100ft²
Weight: 8.90ppg	HTHP-Cake:	0/32nd"	MBT:	4.5	Sand:	0.25	Gels 10s:	6
Temp: 120.0C°			PM:	0.4	pH:	9	Gels 10m:	10
			PF:	0.1	PHPA:	1ppb	Fann 003:	9
							Fann 006:	11
							Fann 100:	20
							Fann 200:	28
							Fann 300:	35
							Fann 600:	50

Comment: Loose excess vol over shakers. Reduce pumprate and screen back to 165 mesh. Build volume while POOH.

Bit # 4

Wear	I	O1	D	L	B	G	O2	R

Size (''):	12.25in	IADC#	M323	**Nozzles**		**Drilled over last 24 hrs**	**Calculated over Bit Run**
Mfr:	HYCALOG	WOB(avg)	0klb	No.	Size	Progress 0m	Cum. Progress 0m
Type:	PDC	RPM(avg)	0	5	14/32nd"	On Bottom Hrs 0h	Cum. On Btm Hrs 0h
Serial No.:	108993	F.Rate	0gpm			IADC Drill Hrs 0h	Cum IADC Drill Hrs 0h
Bit Model	DSX104HGW	SPP	0psi			Total Revs 0	Cum Total Revs 0
Depth In	989.0m	TFA	0.752			ROP(avg) N/A	ROP(avg) 0.00 m/hr
Depth Out	0m						

Bit # 3

Wear	I	O1	D	L	B	G	O2	R
	8	8	RO	A	X	1	ER	PR

Size (''):	12.25in	IADC#	M422	**Nozzles**		**Drilled over last 24 hrs**	**Calculated over Bit Run**
Mfr:	HYCALOG	WOB(avg)	10.0klb	No.	Size	Progress 95.0m	Cum. Progress 202.5m
Type:	PDC	RPM(avg)	65	9	11/32nd"	On Bottom Hrs 2.20h	Cum. On Btm Hrs 6.20h
Serial No.:	207742	F.Rate	950gpm			IADC Drill Hrs 10.90h	Cum IADC Drill Hrs 19.40h
Bit Model	DSX194HGSUW	SPP	2480psi			Total Revs 90526	Cum Total Revs 133279
Depth In	787.5m	TFA	0.835			ROP(avg) 43.18 m/hr	ROP(avg) 32.66 m/hr
Depth Out	990.0m						

BHA # 3

Weight(Wet)	80.0klb	Length	276.8m	Torque(max)	0ft-lbs	D.C. (1) Ann Velocity	
Wt Below Jar(Wet)	50.0klb	String	260.0klb	Torque(Off.Btm)	0ft-lbs	D.C. (2) Ann Velocity	
		Pick-Up	0klb	Torque(On.Btm)	0ft-lbs	H.W.D.P. Ann Velocity	
		Slack-Off	0klb			D.P. Ann Velocity	

BHA Run Description: Bit, X/O, Motor, Float Sub, Roller Reamer, CDR, Power Pulse, Roller Reamer, 9-1/2" NMDC, X/O, 8x8" DC, 8" Jar, 2 x 8" DC, 8" Accelerator, 1 x 8" DC, X/O, 12 x 5" HWDP

Equipment	Length	OD	ID	Serial #	Comment
9.625in Motor	9.68m	12.13in	0in	2099	A962M7848GT w/ 12-1/8" stab
Float Sub	0.90m	9.50in	3.00in	3287	Ported Float
12.25in Roller Reamer	2.52m	12.25in	2.81in	XM066	
9.5in LWD	7.20m	9.50in	0in	9546	CDR9 + PWD
9.5in MWD	8.46m	9.50in	0in	W693	Power Pulse 9
12.25in Roller Reamer	2.52m	12.25in	2.81in	XM065	
9.5in Non Magnetic Drill Collar	9.20m	9.50in	2.81in	D173	
8in Jar	9.78m	8.06in	3.00in	48907C	
8in Accelerator	10.90m	8.00in	3.00in	DAH01586	

Survey

MD (m)	Incl Deg (deg)	Corr. Az (deg)	TVD (m)	'V' Sect (m)	Dogleg (deg/30m)	N/S (m)	E/W (m)	Tool Type
847.21	0.69	337.63	847.14	0	0	0	0	
874.96	1.05	344.29	874.48	0	0	0	0	MWD
903.94	1.25	333.65	903.86	0	0	0	0	MWD
931.51	1.37	333.34	931.42	0	0	0	0	MWD

Bulk Stocks

Name	Unit	In	Used	Adjust	Balance
Fuel	MT	224	15	0	1,062.0
Drill Water	MT	530	54	0	1,397.0
Potable Water	MT	102	28	0	419.0
Gel	MT	57	0	0	158.0
Cement	MT	80	0	0	209.0
Barite	MT	19	4	0	221.0

Personnel On Board

Company	Pax
Santos	4
Transocean	64
Anadrill	3
BHI	7
Dril-Quip	1
Halliburton	2
M.I	2
Weatherford	5
Subsea 7	3
Schlumberger Wireline	7
Santos	2
Total	100

Casing

OD	L.O.T. / F.I.T.	Csg Shoe (MD/TVD)	Cementing
30 "	0ppg / 0ppg	191.0m / 191.0m	
13 3/8"	0ppg / 0ppg	778.3m / 778.3m	

HSE Summary

Events	Date of Last	Days Since	Remarks
Abandon Drill	19 Oct 2004	2 Days	Weekly abandon rig drill.
BOP Test	08 Oct 2004	13 Days	Carried out 15000psi body test on BOP's. Tested all rams etc to 7500psi
Environmental Incident		0 Days	
Fire Drill	10 Oct 2004	11 Days	Simulated fire in Purifier room
First Aid		0 Days	
Lost Time Incident		0 Days	None
Safety Meeting	17 Oct 2004	4 Days	
Stop Cards	14 Oct 2004	7 Days	Man caught running on deck, informed to slow down and walk.

Marine

Weather check on 21 Oct 2004 at 24:00

Visibility	Wind Speed	Wind Dir.	Pressure	Air Temp.	Wave Height	Wave Dir.	Wave Period
10.00nm	20.0kn	070deg	1009bar	15.7C°	0m	000deg	0ft/sec

Roll	Pitch	Heave	Swell Height	Swell Dir.	Swell Period	Weather Comments
0.2deg	0.2deg	1.00m	1.2m	110deg	4.0ft/sec	

Rig Dir.	Ris. Tension	VDL	Comments
216.0deg	0klb	8675.0klb	

Boats	Arrived (date/time)	Departed (date/time)	Status	Bulks		
Lady Astrid			Portland	**Item**	**Unit**	**Quantity**
Lady Caroline			At rig	**Item**	**Unit**	**Quantity**

Santos

DRILLING MORNING REPORT # 15
CALLISTER 01 (22 Oct 2004)

From : B.Houston / J. Young

Well Data

Country	Australia	M. Depth	1403.0m	Cur. Hole Size	12.250in	AFE Cost	
Field	Otway Basin	TVD	1403.0m	Casing OD	13.375in	AFE No.	
Drill Co.	Transocean	Progress	413.0m	Shoe TVD	778.0m	Daily Cost	
Rig	Jack Bates	Days from spud	9.50	F.I.T. / L.O.T.	0ppg / 13.20ppg	Cum Cost	
Wtr Dpth(LAT)	129.4m	Days on well	15.00			Planned TD	3629.0m
RT-ASL(LAT)	29.0m	Current Op @ 0600	Drilling ahead in 12-1/4" hole at 1513mRT.				
RT-ML	158.4m	Planned Op	Continue drilling 12-1/4" hole to TD (+/- 2550m).				

Summary of Period 0000 to 2400 Hrs

RIH with new PDC bit and drilled 12-1/4" hole from 990m - 1403m.

Operations For Period 0000 Hrs to 2400 Hrs on 22 Oct 2004

Phse	Cls (RC)	Op	From	To	Hrs	Depth	Activity Description
IH	P	TI	0000	0015	0.25	990.0m	Continued running in hole from 706m to 762m
IH	P	SC	0015	0300	2.75	990.0m	Held toolbox meeting prior to hanging off in blocks to slip & cut drill line.
IH	P	TI	0300	0500	2.00	990.0m	Continued to run in hole from 762m to 962m.
IH	P	WIN	0500	0515	0.25	990.0m	Washed down from 962m to 990m (Tagged bottom)
IH	P	DA	0515	1200	6.75	1153.0m	Drilled ahead 12-1/4" hole from 990m to 1153m, reaming and surveying at each connection. Average drilling parameters: WOB: 6,400 lbs, DHRPM: 190 rpm, Torque: 5,700 ft.lbs, Flow: 890gpm - 2 pumps, (1 pump boosting riser at 400 gpm).
IH	P	DA	1200	1800	6.00	1301.0m	Drilled ahead 12-1/4" hole from 1153m to 1301m, reaming and surveying at each connection. Average drilling parameters: WOB: 7,300 lbs, DHRPM: 190 rpm, Torque: 7,100ft.lbs, Flow: 860gpm - 2 pumps, (1 pump boosting riser at 400 gpm).
IH	P	DA	1800	2400	6.00	1403.0m	Drilled ahead 12-1/4" hole from 1301m to 1403m, reaming and surveying at each connection. Average drilling parameters: WOB: 5,100 lbs, DHRPM: 190 rpm, Torque: 6,600 ft.lbs, Flow: 865gpm - 2 pumps, (1 pump boosting riser at 400 gpm).

Operations For Period 0000 Hrs to 0600 Hrs on 23 Oct 2004

Phse	Cls (RC)	Op	From	To	Hrs	Depth	Activity Description
IH	P	DA	0000	0600	6.00	1513.0m	Drilled ahead 12-1/4" hole from 1403m to 1513m, reaming and surveying at each connection. Average drilling parameters: WOB: 6,200 lbs, DHRPM: 190 rpm, Torque: 6,000 ft.lbs, Flow: 880gpm - 2 pumps, (1 pump boosting riser at 400 gpm).

Phase Data to 2400hrs, 22 Oct 2004

Phase	Phase Hrs	Start On	Finish On	Cum Hrs	Cum Days	Max Depth
RIG MOVE/RIG-UP(RM)	92.5	08 Oct 2004	12 Oct 2004	92.50	3.854 days	0m
PRESPUD(PS)	25	12 Oct 2004	13 Oct 2004	117.50	4.896 days	158.0m
CONDUCTOR HOLE(CH)	9.5	15 Oct 2004	15 Oct 2004	127.00	5.292 days	192.0m
SURFACE HOLE(SH)	38.75	13 Oct 2004	16 Oct 2004	165.75	6.906 days	787.5m
SURFACE CASING(SC)	55.25	13 Oct 2004	17 Oct 2004	221.00	9.208 days	787.5m
INTERMEDIATE HOLE(IH)	124.5	17 Oct 2004	22 Oct 2004	345.50	14.396 days	1403.0m

WBM Data

Mud Type:	KCL/PHPA/POLYMER	API FL:	8cm³/30m	Cl:	46000	Solids:	2.1
Sample-From:	FL	Filter-Cake:	1/32nd"	K+C*1000:	8%	H2O:	95.6%
Time:	23:00	HTHP-FL:	0cm³/30m	Hard/Ca:	420	Oil:	0%
Weight:	9.10ppg	HTHP-Cake:	0/32nd"	MBT:	6	Sand:	0.25
Temp:	120.0C°			PM:	0	pH:	8.7
				PF:	0	PHPA:	1ppb

Viscosity:	49sec/qt
PV:	13cp
YP:	26lb/100ft²
Gels 10s:	6
Gels 10m:	8
Fann 003:	10
Fann 006:	11
Fann 100:	24
Fann 200:	32
Fann 300:	39
Fann 600:	52

Comment: Mix Mud. Add OSI. Carry out whole mud dillutions to maintain LER at <5.Allow some shaker loses and dump when appropriate.

Bit # 4

Wear	I	O1	D	L	B	G	O2	R

Size (''):	12.25in	IADC#	M323	**Nozzles**		**Drilled over last 24 hrs**		**Calculated over Bit Run**	
Mfr:	HYCALOG	WOB(avg)	9.0klb	No.	Size	Progress	413.0m	Cum. Progress	413.0m
Type:	PDC	RPM(avg)	91	5	14/32nd"	On Bottom Hrs	11.90h	Cum. On Btm Hrs	11.90h
Serial No.:	108993	F.Rate	870gpm			IADC Drill Hrs	17.50h	Cum IADC Drill Hrs	17.50h
Bit Model	DSX104HGW	SPP	2204psi			Total Revs	0	Cum Total Revs	0
Depth In	989.0m	TFA	0.752			ROP(avg)	34.71 m/hr	ROP(avg)	34.71 m/hr
Depth Out	0m								

BHA # 3

Weight(Wet)	80.0klb	Length	276.8m	Torque(max)	0ft-lbs	D.C. (1) Ann Velocity
Wt Below Jar(Wet)	50.0klb	String	260.0klb	Torque(Off.Btm)	0ft-lbs	D.C. (2) Ann Velocity
		Pick-Up	0klb	Torque(On.Btm)	0ft-lbs	H.W.D.P. Ann Velocity
		Slack-Off	0klb			D.P. Ann Velocity

BHA Run Description: Bit, X/O, Motor, Float Sub, Roller Reamer, CDR, Power Pulse, Roller Reamer, 9-1/2" NMDC, X/O, 8x8" DC, 8" Jar, 2 x 8" DC, 8" Accelerator, 1 x 8" DC, X/O, 12 x 5" HWDP

Equipment	Length	OD	ID	Serial #	Comment
9.625in Motor	9.68m	12.13in	0in	2099	A962M7848GT w/ 12-1/8" stab
Float Sub	0.90m	9.50in	3.00in	3287	Ported Float
12.25in Roller Reamer	2.52m	12.25in	2.81in	XM066	
9.5in LWD	7.20m	9.50in	0in	9546	CDR9 + PWD
9.5in MWD	8.46m	9.50in	0in	W693	Power Pulse 9
12.25in Roller Reamer	2.52m	12.25in	2.81in	XM065	
9.5in Non Magnetic Drill Collar	9.20m	9.50in	2.81in	D173	
8in Jar	9.78m	8.06in	3.00in	48907C	
8in Accelerator	10.90m	8.00in	3.00in	DAH01586	

Survey

MD (m)	Incl Deg (deg)	Corr. Az (deg)	TVD (m)	'V' Sect (m)	Dogleg (deg/30m)	N/S (m)	E/W (m)	Tool Type
1361.48	0.51	310.54	1361.33	7.43	0.40	7.43	-4.63	MWD
1390.36	0.53	314.61	1390.21	7.61	0.15	7.61	-4.82	MWD
1417.46	0.62	318.06	1417.30	7.80	0.36	7.80	-5.01	MWD
1447.76	0.51	316.13	1447.60	8.02	0.37	8.02	-5.21	MWD

Bulk Stocks

Name	Unit	In	Used	Adjust	Balance
Fuel	MT	0	13	0	1,049.0
Drill Water	MT	0	127	-50	1,220.0
Potable Water	MT	0	30	0	389.0
Gel	MT	0	0	0	158.0
Cement	MT	0	0	0	209.0
Barite	MT	0	0	0	221.0

Personnel On Board

Company	Pax
Santos	4
Transocean	63
Anadrill	4
BHI	7
Dril-Quip	1
Halliburton	2
M.I	2
Weatherford	5
Subsea 7	3
Schlumberger Wireline	7
Santos	2
Total	100

Casing

OD	L.O.T. / F.I.T.	Csg Shoe (MD/TVD)	Cementing
30 "	0ppg / 0ppg	191.0m / 191.0m	
13 3/8"	13.20ppg / 0ppg	778.3m / 778.3m	

HSE Summary

Events	Date of Last	Days Since	Remarks
Abandon Drill	19 Oct 2004	3 Days	Weekly abandon rig drill.
BOP Test	08 Oct 2004	14 Days	Carried out 15000psi body test on BOP's. Tested all rams etc to 7500psi
Environmental Incident		0 Days	
Fire Drill	10 Oct 2004	12 Days	Simulated fire in Purifier room
First Aid		0 Days	
Lost Time Incident		0 Days	None
Safety Meeting	17 Oct 2004	5 Days	
Stop Cards	14 Oct 2004	8 Days	Man caught running on deck, informed to slow down and walk.

Marine

Weather check on 22 Oct 2004 at 24:00

Visibility	Wind Speed	Wind Dir.	Pressure	Air Temp.	Wave Height	Wave Dir.	Wave Period
6.00nm	4.0kn	090deg	1008bar	13.4C°	0m	000deg	0ft/sec

Roll	Pitch	Heave	Swell Height	Swell Dir.	Swell Period	Weather Comments
0.2deg	0.2deg	1.00m	1.2m	150deg	4.0ft/sec	

Rig Dir.	Ris. Tension	VDL	Comments
216.0deg	0klb	8902.0klb	

Boats	Arrived (date/time)	Departed (date/time)	Status	Bulks		
Lady Astrid			Portland	**Item**	**Unit**	**Quantity**
Lady Caroline			At rig	**Item**	**Unit**	**Quantity**

Helicopter Movement

Flight #	Time	Destination	Comment	Pax
BHQ	15:23	Jack Bates	Arrived on Rig from Essendon Airport	8
BHQ	15:35	Essendon	Departed Rig for Essendon Airport	8

Santos

DRILLING MORNING REPORT # 16
CALLISTER 01 (23 Oct 2004)

From : B.Houston / J. Young

Well Data

Country	Australia	M. Depth	1896.0m	Cur. Hole Size	12.250in	AFE Cost	
Field	Otway Basin	TVD	1896.0m	Casing OD	13.375in	AFE No.	
Drill Co.	Transocean	Progress	493.0m	Shoe TVD	778.0m	Daily Cost	
Rig	Jack Bates	Days from spud	10.50	F.I.T. / L.O.T.	0ppg / 13.20ppg	Cum Cost	
Wtr Dpth(LAT)	129.4m	Days on well	16.00			Planned TD	3629.0m
RT-ASL(LAT)	29.0m	Current Op @ 0600	POOH to the 13-3/8" casing shoe to repair top drive.				
RT-ML	158.4m	Planned Op	POOH to 13-3/8" casing shoe and repair top drive. RIH and continue drilling 12-1/4" hole to section TD (+/- 2550m).				

Summary of Period 0000 to 2400 Hrs

Drilled 12-1/4" hole from 1403m - 1896m. Average on bottom ROP of 30.7 m/hr.

Operations For Period 0000 Hrs to 2400 Hrs on 23 Oct 2004

Phse	Cls (RC)	Op	From	To	Hrs	Depth	Activity Description
IH	P	DA	0000	0600	6.00	1513.0m	Drilled ahead 12-1/4" hole from 1403m to 1513m, reaming and surveying at each connection. Average drilling parameters: WOB: 6,200 lbs, DHRPM: 190 rpm, Torque: 6,000 ft.lbs, Flow: 880gpm - 2 pumps, (1 pump boosting riser at 400 gpm).
IH	P	DA	0600	1200	6.00	1651.0m	Drilled ahead 12-1/4" hole from 1513m to 1651m, reaming and surveying at each connection. Average drilling parameters: WOB: 7,000 lbs, DHRPM: 193 rpm, Torque: 6,700 ft.lbs, Flow: 870gpm - 2 pumps, (1 pump intermittently boosting riser at 400 gpm).
IH	P	DA	1200	1800	6.00	1787.0m	Drilled ahead 12-1/4" hole from 1651m to 1787m, reaming and surveying at each connection. Average drilling parameters: WOB: 7,300 lbs, DHRPM: 195 rpm, Torque: 7,400 ft.lbs, Flow: 872gpm - 2 pumps, (1 pump intermittently boosting riser at 400 gpm).
IH	P	DA	1800	2400	6.00	1896.0m	Drilled ahead 12-1/4" hole from 1787m to 1896m, reaming and surveying at each connection. Average drilling parameters: WOB: 5,400 lbs, DHRPM: 189 rpm, Torque: 8,500 ft.lbs, Flow: 866gpm - 2 pumps, (1 pump intermittently boosting riser at 400 gpm).

Operations For Period 0000 Hrs to 0600 Hrs on 24 Oct 2004

Phse	Cls (RC)	Op	From	To	Hrs	Depth	Activity Description
IH	P	DA	0000	0015	0.25	1900.0m	Drilled 12-1/4" hole from 1896m - 1900m.
IH	TP (RE)	RR	0015	0100	0.75	1900.0m	Elevator gates not closing when attempting to pick up a new stand. Troubleshot problem with drill pipe elevators.
IH	P	DA	0100	0145	0.75	1919.0m	Drilled 12-1/4" hole from 1900m - 1919m.
IH	TP (RE)	RR	0145	0245	1.00	1919.0m	Top drive alarm indicated a problem with the oil lubricating pump. Troubleshot problem whilst circulating the hole at 870 gpm.
IH	TP (RE)	RR	0245	0600	3.25	1919.0m	Unable to fix the top drive. Circulated bottoms up (whilst boosting the riser) and POOH to the 13-3/8" casing shoe to repair the top drive.

Phase Data to 2400hrs, 23 Oct 2004

Phase	Phase Hrs	Start On	Finish On	Cum Hrs	Cum Days	Max Depth
RIG MOVE/RIG-UP(RM)	92.5	08 Oct 2004	12 Oct 2004	92.50	3.854 days	0m
PRESPUD(PS)	25	12 Oct 2004	13 Oct 2004	117.50	4.896 days	158.0m
CONDUCTOR HOLE(CH)	9.5	15 Oct 2004	15 Oct 2004	127.00	5.292 days	192.0m
SURFACE HOLE(SH)	38.75	13 Oct 2004	16 Oct 2004	165.75	6.906 days	787.5m
SURFACE CASING(SC)	55.25	13 Oct 2004	17 Oct 2004	221.00	9.208 days	787.5m
INTERMEDIATE HOLE(IH)	148.5	17 Oct 2004	23 Oct 2004	369.50	15.396 days	1896.0m

WBM Data

Mud Type:	KCL/PHPA/POLYMER	API FL:	6cm³/30m	Cl:	46000	Solids:	1.5
Sample-From:	FL	Filter-Cake:	1/32nd"	K+C*1000:	8%	H2O:	94.5%
Time:	22:00	HTHP-FL:	0cm³/30m	Hard/Ca:	300	Oil:	0%
Weight:	9.10ppg	HTHP-Cake:	0/32nd"	MBT:	5	Sand:	1.4
Temp:	120.0C°			PM:	0	pH:	8.8
				PF:	0	PHPA:	1ppb

Viscosity:	49sec/qt
PV:	14cp
YP:	25lb/100ft²
Gels 10s:	7
Gels 10m:	12
Fann 003:	9
Fann 006:	12
Fann 100:	24
Fann 200:	34
Fann 300:	39
Fann 600:	53

Comment: Continue bleeding whole mud to active. Maintain pH and sulphite conc. Screen back up on the shakers to 200 mesh. Dump when necessary for space. Wt seems stable.

Bit # 4

Wear	I	O1	D	L	B	G	O2	R

Size (''):	12.25in	IADC#	M323	**Nozzles**		**Drilled over last 24 hrs**		**Calculated over Bit Run**	
Mfr:	HYCALOG	WOB(avg)	7.0klb	No.	Size	Progress	493.0m	Cum. Progress	906.0m
Type:	PDC	RPM(avg)	97	5	14/32nd"	On Bottom Hrs	17.60h	Cum. On Btm Hrs	29.50h
Serial No.:	108993	F.Rate	870gpm			IADC Drill Hrs	24.00h	Cum IADC Drill Hrs	41.50h
Bit Model	DSX104HGW	SPP	2447psi			Total Revs	0	Cum Total Revs	0
Depth In	989.0m	TFA	0.752			ROP(avg)	28.01 m/hr	ROP(avg)	30.71 m/hr
Depth Out	0m								

BHA # 3

Weight(Wet)	80.0klb	Length	276.8m	Torque(max)	0ft-lbs	D.C. (1) Ann Velocity	
Wt Below Jar(Wet)	50.0klb	String	260.0klb	Torque(Off.Btm)	0ft-lbs	D.C. (2) Ann Velocity	
		Pick-Up	0klb	Torque(On.Btm)	0ft-lbs	H.W.D.P. Ann Velocity	
		Slack-Off	0klb			D.P. Ann Velocity	

BHA Run Description: Bit, X/O, Motor, Float Sub, Roller Reamer, CDR, Power Pulse, Roller Reamer, 9-1/2" NMDC, X/O, 8x8" DC, 8" Jar, 2 x 8" DC, 8" Accelerator, 1 x 8" DC, X/O, 12 x 5" HWDP

Equipment	Length	OD	ID	Serial #	Comment
9.625in Motor	9.68m	12.13in	0in	2099	A962M7848GT w/ 12-1/8" stab
Float Sub	0.90m	9.50in	3.00in	3287	Ported Float
12.25in Roller Reamer	2.52m	12.25in	2.81in	XM066	
9.5in LWD	7.20m	9.50in	0in	9546	CDR9 + PWD
9.5in MWD	8.46m	9.50in	0in	W693	Power Pulse 9
12.25in Roller Reamer	2.52m	12.25in	2.81in	XM065	
9.5in Non Magnetic Drill Collar	9.20m	9.50in	2.81in	D173	
8in Jar	9.78m	8.06in	3.00in	48907C	
8in Accelerator	10.90m	8.00in	3.00in	DAH01586	

Survey

MD (m)	Incl Deg (deg)	Corr. Az (deg)	TVD (m)	'V' Sect (m)	Dogleg (deg/30m)	N/S (m)	E/W (m)	Tool Type
1588.76	0.41	306.97	1588.60	8.76	0.13	8.76	-6.12	MWD
1674.20	0.58	302.18	1674.04	9.17	0.20	9.17	-6.73	MWD
1759.79	0.77	300.09	1759.62	9.69	0.22	9.69	-7.60	MWD
1847.14	0.95	294.58	1846.96	10.29	0.23	10.29	-8.76	MWD

Bulk Stocks

Name	Unit	In	Used	Adjust	Balance
Fuel	MT	0	14	0	1,035.0
Drill Water	MT	0	169	0	1,051.0
Potable Water	MT	0	30	0	359.0
Gel	MT	0	0	0	158.0
Cement	MT	0	0	0	209.0
Barite	MT	0	0	0	221.0

Personnel On Board

Company	Pax
Santos	4
Transocean	64
Anadrill	2
BHI	7
Dril-Quip	1
Halliburton	2
M.I	2
Weatherford	5
Subsea 7	3
Schlumberger Wireline	7
Santos	2
Total	99

Casing

OD	L.O.T. / F.I.T.	Csg Shoe (MD/TVD)	Cementing
30 "	0ppg / 0ppg	191.0m / 191.0m	
13 3/8"	13.20ppg / 0ppg	778.3m / 778.3m	

HSE Summary

Events	Date of Last	Days Since	Remarks
Abandon Drill	19 Oct 2004	4 Days	Weekly abandon rig drill.
BOP Test	08 Oct 2004	15 Days	Carried out 15000psi body test on BOP's. Tested all rams etc to 7500psi
Environmental Incident		0 Days	
Fire Drill	10 Oct 2004	13 Days	Simulated fire in Purifier room
First Aid		0 Days	
Lost Time Incident		0 Days	None
Safety Meeting	17 Oct 2004	6 Days	
Stop Cards	22 Oct 2004	1 Day	13 START Cards submitted

Marine

Weather check on 23 Oct 2004 at 24:00

Visibility	Wind Speed	Wind Dir.	Pressure	Air Temp.	Wave Height	Wave Dir.	Wave Period
10.00nm	17.0kn	170deg	1017bar	12.1C°	0m	000deg	0ft/sec

Roll	Pitch	Heave	Swell Height	Swell Dir.	Swell Period	Weather Comments
0.3deg	0.3deg	1.00m	1.8m	180deg	3.0ft/sec	

Rig Dir.	Ris. Tension	VDL	Comments
216.0deg	0klb	8851.0klb	

Boats	Arrived (date/time)	Departed (date/time)	Status	Bulks		
Lady Astrid			Portland	**Item**	**Unit**	**Quantity**
Lady Caroline			At rig	**Item**	**Unit**	**Quantity**

Helicopter Movement

Flight #	Time	Destination	Comment	Pax
BHQ	15:23	Jack Bates	Arrived on Rig from Essendon Airport	5
BHQ	15:35	Essendon	Departed Rig for Essendon Airport	6

Santos

DRILLING MORNING REPORT # 17
CALLISTER 01 (24 Oct 2004)

From : B.Houston / J. Young

Well Data

Country	Australia	M. Depth	2066.0m	Cur. Hole Size	12.250in	AFE Cost	
Field	Otway Basin	TVD	2066.0m	Casing OD	13.375in	AFE No.	
Drill Co.	Transocean	Progress	170.0m	Shoe TVD	778.0m	Daily Cost	
Rig	Jack Bates	Days from spud	11.50	F.I.T. / L.O.T.	0ppg / 13.20ppg	Cum Cost	
Wtr Dpth(LAT)	129.4m	Days on well	16.98			Planned TD	3629.0m
RT-ASL(LAT)	29.0m	Current Op @ 0600	Drilling ahead in 12-1/4" hole at 2185mRT.				
RT-ML	158.4m	Planned Op	Continue drilling to TD (+/- 2550mRT), circulate bottoms up and POOH to run wireline logs.				

Summary of Period 0000 to 2400 Hrs

POOH to the 13-3/8" casing shoe, repaired top drive, RIH back to bottom, washed through a tight spot at 1895mRT and drilled 12-1/4" hole from 1919mRT - 2066mRT.

Operations For Period 0000 Hrs to 2400 Hrs on 24 Oct 2004

Phse	Cls (RC)	Op	From	To	Hrs	Depth	Activity Description
IH	P	DA	0000	0015	0.25	1900.0m	Drilled 12-1/4" hole from 1896m - 1900m.
IH	TP (RE)	RR	0015	0045	0.50	1900.0m	Elevator gates not closing when attempting to pick up a new stand. Troubleshot problem with drill pipe elevators.
IH	P	DA	0045	0145	1.00	1919.0m	Drilled 12-1/4" hole from 1900m - 1919m.
IH	TP (RE)	RR	0145	0245	1.00	1919.0m	Top drive alarm indicated a problem with the oil lubricating pump. Troubleshot problem whilst circulating the hole at 870 gpm.
IH	TP (RE)	RR	0245	0715	4.50	1919.0m	Unable to fix the top drive. Circulated bottoms up (whilst boosting the riser) and POOH to the 13-3/8" casing shoe to repair the top drive. Hole in good condition (no significant drag observed).
IH	TP (RE)	RR	0745	1000	2.25	1919.0m	Monitored trip tank whilst repiaring the top drive. Observed static losses of 2-4 bbls/hr.
IH	TP (RE)	RR	1000	1030	0.50	1919.0m	Changed out BX elevators and bails due to elevator doors not closing properly.
IH	TP (RE)	RR	1030	1415	3.75	1919.0m	RIH with 12-1/4" BHA, monitored trip tank and filled drill pipe every 10 sands. Encountered a tight spot at 1895m.
IH	TP (RE)	RR	1415	1500	0.75	1919.0m	Made up top drive and washed down from 1895 to 1919m. (Flow: 800 gpm; DHRPM: 135rpm; Torque: 1,500 ft.lbs)
IH	P	DA	1500	2400	9.00	2066.0m	Drilled 12-1/4" hole from 1919m - 2066m, reamed and surveyed at each connection. Monitored trip tank for losses during connections. Average drilling parameters: WOB: 5,400lbs; DHRPM: 189 rpm; Torque: 8,500 ft.lbs; Flow: 870 gpm - 2 pumps (1 pump intermittently boosting the riser at 400 gpm)

Operations For Period 0000 Hrs to 0600 Hrs on 25 Oct 2004

Phse	Cls (RC)	Op	From	To	Hrs	Depth	Activity Description
IH	P	DA	0000	0600	6.00	2185.0m	Drilled 12-1/4" hole from 2066m - 2185m, reamed and surveyed at each connection. Monitored trip tank for losses during connections. Average drilling parameters: WOB: 5,400lbs; DHRPM: 189 rpm; Torque: 8,500 ft.lbs; Flow: 870 gpm - 2 pumps (1 pump intermittently boosting the riser at 400 gpm)

Phase Data to 2400hrs, 24 Oct 2004

Phase	Phase Hrs	Start On	Finish On	Cum Hrs	Cum Days	Max Depth
RIG MOVE/RIG-UP(RM)	92.5	08 Oct 2004	12 Oct 2004	92.50	3.854 days	0m
PRESPUD(PS)	25	12 Oct 2004	13 Oct 2004	117.50	4.896 days	158.0m
CONDUCTOR HOLE(CH)	9.5	15 Oct 2004	15 Oct 2004	127.00	5.292 days	192.0m
SURFACE HOLE(SH)	38.75	13 Oct 2004	16 Oct 2004	165.75	6.906 days	787.5m
SURFACE CASING(SC)	55.25	13 Oct 2004	17 Oct 2004	221.00	9.208 days	787.5m
INTERMEDIATE HOLE(IH)	172	17 Oct 2004	24 Oct 2004	393.00	16.375 days	2066.0m

WBM Data

Mud Type:	KCL/PHPA/POLYMER	API FL:	5cm³/30m	Cl:	44000	Solids:	1.6	Viscosity:	47sec/qt
Sample-From:	FL	Filter-Cake:	1/32nd"	K+C*1000:	7.7%	H2O:	94%	PV:	16cp
Time:	22:00	HTHP-FL:	0cm³/30m	Hard/Ca:	220	Oil:	0%	YP:	20lb/100ft²
Weight:	9.10ppg	HTHP-Cake:	0/32nd"	MBT:	4.5	Sand:	1	Gels 10s:	5
Temp:	120.0C°			PM:	0	pH:	9.1	Gels 10m:	8
				PF:	0.1	PHPA:	1ppb	Fann 003:	8
								Fann 006:	11
								Fann 100:	21
								Fann 200:	29
								Fann 300:	36
								Fann 600:	52

Comment: Build Volume and condition mud. Dress shakers with new 200 mesh screens.

Bit # 4

Wear	I	O1	D	L	B	G	O2	R

Size (''):	12.25in	IADC#	M323	**Nozzles**		**Drilled over last 24 hrs**		**Calculated over Bit Run**	
Mfr:	HYCALOG	WOB(avg)	10.1klb	No.	Size	Progress	170.0m	Cum. Progress	1076.0m
Type:	PDC	RPM(avg)	94	5	14/32nd"	On Bottom Hrs	8.20h	Cum. On Btm Hrs	37.70h
Serial No.:	108993	F.Rate	861gpm			IADC Drill Hrs	10.25h	Cum IADC Drill Hrs	51.75h
Bit Model	DSX104HGW	SPP	2586psi			Total Revs	0	Cum Total Revs	0
Depth In	989.0m	TFA	0.752			ROP(avg)	20.73 m/hr	ROP(avg)	28.54 m/hr
Depth Out	0m								

BHA # 3

Weight(Wet)	80.0klb	Length	276.8m	Torque(max)	0ft-lbs	D.C. (1) Ann Velocity	
Wt Below Jar(Wet)	50.0klb	String	260.0klb	Torque(Off.Btm)	0ft-lbs	D.C. (2) Ann Velocity	
		Pick-Up	0klb	Torque(On.Btm)	0ft-lbs	H.W.D.P. Ann Velocity	
		Slack-Off	0klb			D.P. Ann Velocity	

BHA Run Description: Bit, X/O, Motor, Float Sub, Roller Reamer, CDR, Power Pulse, Roller Reamer, 9-1/2" NMDC, X/O, 8x8" DC, 8" Jar, 2 x 8" DC, 8" Accelerator, 1 x 8" DC, X/O, 12 x 5" HWDP

Equipment	Length	OD	ID	Serial #	Comment
9.625in Motor	9.68m	12.13in	0in	2099	A962M7848GT w/ 12-1/8" stab
Float Sub	0.90m	9.50in	3.00in	3287	Ported Float
12.25in Roller Reamer	2.52m	12.25in	2.81in	XM066	
9.5in LWD	7.20m	9.50in	0in	9546	CDR9 + PWD
9.5in MWD	8.46m	9.50in	0in	W693	Power Pulse 9
12.25in Roller Reamer	2.52m	12.25in	2.81in	XM065	
9.5in Non Magnetic Drill Collar	9.20m	9.50in	2.81in	D173	
8in Jar	9.78m	8.06in	3.00in	48907C	
8in Accelerator	10.90m	8.00in	3.00in	DAH01586	

Survey

MD (m)	Incl Deg (deg)	Corr. Az (deg)	TVD (m)	'V' Sect (m)	Dogleg (deg/30m)	N/S (m)	E/W (m)	Tool Type
1759.79	0.77	300.09	1759.62	9.69	0.22	9.69	-7.60	MWD
1847.20	0.95	294.58	1847.02	10.29	0.23	10.29	-8.77	MWD
1930.43	0.89	302.24	1930.24	10.92	0.16	10.92	-9.94	MWD
2017.36	0.91	307.00	2017.16	11.69	0.09	11.69	-11.06	MWD

Bulk Stocks

Name	Unit	In	Used	Adjust	Balance
Fuel	MT	0	13	0	1,022.0
Drill Water	MT	0	99	0	952.0
Potable Water	MT	0	33	0	326.0
Gel	MT	0	0	0	158.0
Cement	MT	0	0	0	209.0
Barite	MT	0	0	0	221.0

Personnel On Board

Company	Pax
Santos	4
Transocean	64
Anadrill	2
BHI	7
Dril-Quip	1
Halliburton	2
M.I	2
Weatherford	5
Subsea 7	3
Schlumberger Wireline	7
Santos	2
Total	99

Casing

OD	L.O.T. / F.I.T.	Csg Shoe (MD/TVD)	Cementing
30 "	0ppg / 0ppg	191.0m / 191.0m	
13 3/8"	13.20ppg / 0ppg	778.3m / 778.3m	

HSE Summary

Events	Date of Last	Days Since	Remarks
Abandon Drill	24 Oct 2004	0 Days	Weekly abandon rig drill.
BOP Test	08 Oct 2004	16 Days	Carried out 15000psi body test on BOP's. Tested all rams etc to 7500psi
Environmental Incident		0 Days	
Fire Drill	24 Oct 2004	0 Days	Simulated fire in welders shop
First Aid		0 Days	
Lost Time Incident		0 Days	None
Safety Meeting	24 Oct 2004	0 Days	
Stop Cards	24 Oct 2004	0 Days	11 START Cards submitted

Marine

Weather check on 24 Oct 2004 at 24:00

Visibility	Wind Speed	Wind Dir.	Pressure	Air Temp.	Wave Height	Wave Dir.	Wave Period
10.00nm	2.0kn	180deg	1017bar	12.7C°	0m	000deg	0ft/sec

Roll	Pitch	Heave	Swell Height	Swell Dir.	Swell Period	Weather Comments
0.4deg	0.2deg	1.00m	1.5m	225deg	13.0ft/sec	

Rig Dir.	Ris. Tension	VDL	Comments
216.0deg	0klb	8769.0klb	

Boats	Arrived (date/time)	Departed (date/time)	Status	Bulks		
Lady Astrid			At Rig	**Item**	**Unit**	**Quantity**
Lady Caroline			Portland	**Item**	**Unit**	**Quantity**

Santos

DRILLING MORNING REPORT # 18
CALLISTER 01 (25 Oct 2004)

From : B.Houston / J. Young

Well Data

Country	Australia	M. Depth	2522.0m	Cur. Hole Size	12.250in	AFE Cost	
Field	Otway Basin	TVD	2522.0m	Casing OD	13.375in	AFE No.	
Drill Co.	Transocean	Progress	456.0m	Shoe TVD	778.0m	Daily Cost	
Rig	Jack Bates	Days from spud	12.50	F.I.T. / L.O.T.	0ppg / 13.20ppg	Cum Cost	
Wtr Dpth(LAT)	129.4m	Days on well	17.98			Planned TD	3629.0m
RT-ASL(LAT)	29.0m	Current Op @ 0600	POOH with the 12-1/4" BHA.				
RT-ML	158.4m	Planned Op	POOH with 12-1/4" BHA, run wireline logs and prepare to run 9-5/8" casing.				

Summary of Period 0000 to 2400 Hrs

Drilled from 2066mRT - 2522mRT.

Operations For Period 0000 Hrs to 2400 Hrs on 25 Oct 2004

Phse	Cls (RC)	Op	From	To	Hrs	Depth	Activity Description
IH	P	DA	0000	0600	6.00	2185.0m	Drilled 12-1/4" hole from 2066m - 2185m, reamed and surveyed at each connection. Monitored trip tank for losses during connections. Average drilling parameters: WOB: 5,400lbs; DHRPM: 189 rpm; Torque: 8,500 ft.lbs; Flow: 870 gpm - 2 pumps (1 pump intermittently boosting the riser at 400 gpm)
IH	P	DA	0600	1200	6.00	2300.0m	Drilled 12-1/4" hole from 2185m - 2300m, reamed and surveyed at each connection. Monitored trip tank for losses during connections. Average drilling parameters: WOB: 7,300lbs; DHRPM: 184 rpm; Torque: 10,000 ft.lbs; Flow: 853 gpm - 2 pumps (1 pump intermittently boosting the riser at 400 gpm)
IH	P	DA	1200	1800	6.00	2410.0m	Drilled 12-1/4" hole from 2300m - 2410m, reamed and surveyed at each connection. Monitored trip tank for losses during connections. Average drilling parameters: WOB: 10,900lbs; DHRPM: 188 rpm; Torque: 11,800 ft.lbs; Flow: 871 gpm - 2 pumps (1 pump intermittently boosting the riser at 400 gpm)
IH	P	DA	1800	2400	6.00	2522.0m	Drilled 12-1/4" hole from 2410m - 2522m, reamed and surveyed at each connection. Monitored trip tank for losses during connections. Average drilling parameters: WOB: 10,600lbs; DHRPM: 184 rpm; Torque: 12,200 ft.lbs; Flow: 867 gpm - 2 pumps (1 pump intermittently boosting the riser at 400 gpm)

Operations For Period 0000 Hrs to 0600 Hrs on 26 Oct 2004

Phse	Cls (RC)	Op	From	To	Hrs	Depth	Activity Description
IH	P	DA	0000	0200	2.00	2550.0m	Drilled 12-1/4" hole from 2522m - 2550m, reamed and surveyed at each connection. Monitored trip tank for losses during connections. Average drilling parameters: WOB: 10,000lbs; DHRPM: 178 rpm; Torque: 9,200 ft.lbs; Flow: 856 gpm - 2 pumps (1 pump intermittently boosting the riser at 400 gpm)
IH	P	CHC	0200	0330	1.50	2550.0m	Section TD. Took survey (1 deg; 27.5m from vertical) and circulated 1.5 bottoms up at 900 gpm. Flow checked the well (static).
IH	P	CHC	0330	0400	0.50	2550.0m	Continued to circulate the well (900 gpm) whilst boosting the riser (400 gpm) until shakers became clean.
IH	P	TO	0400	0545	1.75	2550.0m	Flow checked the well (static) and pulled out of the hole from 2550 - 2096m.
IH	P	TO	0545	0600	0.25	2550.0m	Pulled into tight spot at 2090m (35-40 klbs overpull). Connected the top drive and backreamed one stand. Stopped circulaion, rotation and POOH, no drag observed.

Phase Data to 2400hrs, 25 Oct 2004

Phase	Phase Hrs	Start On	Finish On	Cum Hrs	Cum Days	Max Depth
RIG MOVE/RIG-UP(RM)	92.5	08 Oct 2004	12 Oct 2004	92.50	3.854 days	0m
PRESPUD(PS)	25	12 Oct 2004	13 Oct 2004	117.50	4.896 days	158.0m
CONDUCTOR HOLE(CH)	9.5	15 Oct 2004	15 Oct 2004	127.00	5.292 days	192.0m
SURFACE HOLE(SH)	38.75	13 Oct 2004	16 Oct 2004	165.75	6.906 days	787.5m
SURFACE CASING(SC)	55.25	13 Oct 2004	17 Oct 2004	221.00	9.208 days	787.5m
INTERMEDIATE HOLE(IH)	196	17 Oct 2004	25 Oct 2004	417.00	17.375 days	2522.0m

WBM Data

Mud Type:	KCL/PHPA/POLYMER	API FL:	6cm³/30m	Cl:	46000	Solids:	2.1	Viscosity:	51sec/qt
Sample-From:	FL	Filter-Cake:	1/32nd"	K+C*1000:	8%	H2O:	94%	PV:	15cp
Time:	20:30	HTHP-FL:	0cm³/30m	Hard/Ca:	200	Oil:	0%	YP:	23lb/100ft²
Weight:	9.10ppg	HTHP-Cake:	0/32nd"	MBT:	6	Sand:	1	Gels 10s:	5
Temp:	120.0C°			PM:	0.2	pH:	9	Gels 10m:	8
				PF:	0.1	PHPA:	1ppb	Fann 003:	8
								Fann 006:	10
								Fann 100:	23
								Fann 200:	32
								Fann 300:	38
								Fann 600:	53

Comment: Build Volume and condition mud for low end rheology.Screen down. Mud wt ok.

Bit # 4

Wear	I	O1	D	L	B	G	O2	R

Size (''):	12.25in	IADC#	M323	**Nozzles**		**Drilled over last 24 hrs**		**Calculated over Bit Run**	
Mfr:	HYCALOG	WOB(avg)	10.5klb	No.	Size	Progress	456.0m	Cum. Progress	1532.0m
Type:	PDC	RPM(avg)	91	5	14/32nd"	On Bottom Hrs	18.40h	Cum. On Btm Hrs	56.10h
Serial No.:	108993	F.Rate	861gpm			IADC Drill Hrs	24.00h	Cum IADC Drill Hrs	75.75h
Bit Model	DSX104HGW	SPP	2806psi			Total Revs	0	Cum Total Revs	0
Depth In	989.0m	TFA	0.752			ROP(avg)	24.78 m/hr	ROP(avg)	27.31 m/hr
Depth Out	0m								

BHA # 3

Weight(Wet)	80.0klb	Length	276.8m	Torque(max)	0ft-lbs	D.C. (1) Ann Velocity
Wt Below Jar(Wet)	50.0klb	String	260.0klb	Torque(Off.Btm)	0ft-lbs	D.C. (2) Ann Velocity
		Pick-Up	0klb	Torque(On.Btm)	0ft-lbs	H.W.D.P. Ann Velocity
		Slack-Off	0klb			D.P. Ann Velocity

BHA Run Description: Bit, X/O, Motor, Float Sub, Roller Reamer, CDR, Power Pulse, Roller Reamer, 9-1/2" NMDC, X/O, 8x8" DC, 8" Jar, 2 x 8" DC, 8" Accelerator, 1 x 8" DC, X/O, 12 x 5" HWDP

Equipment	Length	OD	ID	Serial #	Comment
9.625in Motor	9.68m	12.13in	0in	2099	A962M7848GT w/ 12-1/8" stab
Float Sub	0.90m	9.50in	3.00in	3287	Ported Float
12.25in Roller Reamer	2.52m	12.25in	2.81in	XM066	
9.5in LWD	7.20m	9.50in	0in	9546	CDR9 + PWD
9.5in MWD	8.46m	9.50in	0in	W693	Power Pulse 9
12.25in Roller Reamer	2.52m	12.25in	2.81in	XM065	
9.5in Non Magnetic Drill Collar	9.20m	9.50in	2.81in	D173	
8in Jar	9.78m	8.06in	3.00in	48907C	
8in Accelerator	10.90m	8.00in	3.00in	DAH01586	

Survey

MD (m)	Incl Deg (deg)	Corr. Az (deg)	TVD (m)	'V' Sect (m)	Dogleg (deg/30m)	N/S (m)	E/W (m)	Tool Type
2187.51	0.94	306.90	2187.28	13.42	0.05	13.42	-13.26	MWD
2273.18	1.01	323.23	2272.94	14.45	0.33	14.45	-14.28	MWD
2358.91	0.97	322.75	2358.66	15.63	0.05	15.63	-15.17	MWD
2445.35	0.96	329.95	2445.09	16.84	0.14	16.84	-15.97	MWD

Bulk Stocks

Name	Unit	In	Used	Adjust	Balance
Fuel	MT	0	14	0	1,008.0
Drill Water	MT	0	171	0	781.0
Potable Water	MT	0	26	0	300.0
Gel	MT	0	0	0	158.0
Cement	MT	0	0	0	209.0
Barite	MT	0	0	0	221.0

Personnel On Board

Company	Pax
Santos	7
Transocean	66
Anadrill	2
BHI	6
Dril-Quip	1
Halliburton	3
M.I	2
Weatherford	5
Subsea 7	3
Schlumberger Wireline	7
Santos	2
Total	104

Casing

OD	L.O.T. / F.I.T.	Csg Shoe (MD/TVD)	Cementing
30 "	0ppg / 0ppg	191.0m / 191.0m	
13 3/8"	13.20ppg / 0ppg	778.3m / 778.3m	

HSE Summary

Events	Date of Last	Days Since	Remarks
Abandon Drill	19 Oct 2004	6 Days	Weekly abandon rig drill.
BOP Test	08 Oct 2004	17 Days	Carried out 15000psi body test on BOP's. Tested all rams etc to 7500psi
Environmental Incident		0 Days	
Fire Drill	10 Oct 2004	15 Days	Simulated fire in Purifier room
First Aid		0 Days	
Lost Time Incident		0 Days	None
Safety Meeting	17 Oct 2004	8 Days	
Stop Cards	25 Oct 2004	0 Days	9 START Cards submitted

Marine

Weather check on 25 Oct 2004 at 24:00

Visibility	Wind Speed	Wind Dir.	Pressure	Air Temp.	Wave Height	Wave Dir.	Wave Period
10.00nm	6.0kn	045deg	1014bar	15.8C°	0m	000deg	0ft/sec

Roll	Pitch	Heave	Swell Height	Swell Dir.	Swell Period	Weather Comments
0.2deg	0.2deg	2.00m	1.5m	225deg	13.0ft/sec	

Rig Dir.	Ris. Tension	VDL	Comments
216.0deg	0klb	8818.0klb	

Boats	Arrived (date/time)	Departed (date/time)	Status	Bulks		
Lady Astrid			At Rig	**Item**	**Unit**	**Quantity**
Lady Caroline			Portland	**Item**	**Unit**	**Quantity**

Helicopter Movement

Flight #	Time	Destination	Comment	Pax
BHQ/BHI	15:51	Jack Bates	Arrived on Rig from Essendon Airport. Problems with BHQ and was replaced by BHI.	7
BHI	16:03	Essendon	Departed Rig for Essendon Airport	8
BHI	17:02	Jack Bates	Arrived on Rig from Essendon Airport	8
BHI	17:13	Essendon	Departed Rig for Essendon Airport	2

Santos

DRILLING MORNING REPORT # 19
CALLISTER 01 (26 Oct 2004)

From : B.Houston / J. Young

Well Data

Country	Australia	M. Depth	2550.0m	Cur. Hole Size	12.250in	AFE Cost	
Field	Otway Basin	TVD	2550.0m	Casing OD	13.375in	AFE No.	
Drill Co.	Transocean	Progress	28.0m	Shoe TVD	778.0m	Daily Cost	
Rig	Jack Bates	Days from spud	13.50	F.I.T. / L.O.T.	0ppg / 13.20ppg	Cum Cost	
Wtr Dpth(LAT)	129.4m	Days on well	18.98			Planned TD	3629.0m
RT-ASL(LAT)	29.0m	Current Op @ 0600	Logging.				
RT-ML	158.4m	Planned Op	Log from TD to surface, jet the BOP's, pull wear bushing, run 9-5/8" intermediate casing.				

Summary of Period 0000 to 2400 Hrs

Drilled from 2522m - 2550m, surveyed, circulated ~2x bottoms up, flow checked well, POOH, Rigged up and RIH with logging tools.

Operations For Period 0000 Hrs to 2400 Hrs on 26 Oct 2004

Phse	Cls (RC)	Op	From	To	Hrs	Depth	Activity Description
IH	P	DA	0000	0200	2.00	2550.0m	Drilled 12-1/4" hole from 2522m - 2550m, reamed and surveyed at each connection. Monitored trip tank for losses during connections. Average drilling parameters: WOB: 10,000lbs; DHRPM: 178 rpm; Torque: 9,200 ft.lbs; Flow: 856 gpm - 2 pumps (1 pump intermittently boosting the riser at 400 gpm)
IH	P	CHC	0200	0330	1.50	2550.0m	Section TD. Took survey (1 deg; 27.5m from vertical) and circulated 1.5 bottoms up at 900 gpm. Flow checked the well (static).
IH	P	CHC	0330	0400	0.50	2550.0m	Continued to circulate the well (900 gpm) whilst boosting the riser (400 gpm) until shakers became clean.
IH	P	TO	0400	0545	1.75	2550.0m	Flow checked the well (static) and pulled out of the hole from 2550 - 2096m.
IH	P	TO	0545	1100	5.25	2550.0m	Pulled into tight spot at 2090m (35-40 klbs overpull). Connected the top drive and backreamed one stand. Stopped circulaion, rotation and POOH, no drag observed. Tight spots also found at 2054m, 1990m, 1923m and 1866m. Backreamed each respective stand and POOH to the 13-3/8" casing shoe with no drag.
IH	P	TO	1100	1245	1.75	2550.0m	Flow checked the well at the 13-3/8" casing shoe (static). POOH to the BOP's, flow checked (static) and POOH until BHA was at surface.
IH	P	HBHA	1245	1600	3.25	2550.0m	Held JSA before handling the BHA. Racked back BHA, dowloaded FEWD, laid out mud motor and bit. Cleaned drill floor of excess equipment prior to logging.
IH	P	LOG	1600	1930	3.50	2550.0m	Held JSA on logging operations, rigged up wireline equipment, made up toolstring (PEX-DSI-HLAS) and loaded radioactive sources.
IH	TP (DTF)	LOG	1930	2400	4.50	2550.0m	RIH with wireline to 800m and resistivity tool failed. Trouble shot problem but were unable to fix. POOH with wireline, removed radioactive sources and changed out tool. Made up new toolstring, loaded sources and RIH on wireline.

Operations For Period 0000 Hrs to 0600 Hrs on 27 Oct 2004

Phse	Cls (RC)	Op	From	To	Hrs	Depth	Activity Description
IH	P	LOG	0000	0200	2.00	2550.0m	RIH to with logging suite. Unable to get wireline to TD, tools hung up at 2508mRT. Attempted to pass obstruction 3 times, unsuccessful.
IH	P	LOG	0200	0600	4.00	2550.0m	Log well from 2508m at 550m/hr. Resistivity tool failed at 1600m, called town to check requirements, decided to continue to log well without resisivity.

Phase Data to 2400hrs, 26 Oct 2004

Phase	Phase Hrs	Start On	Finish On	Cum Hrs	Cum Days	Max Depth
RIG MOVE/RIG-UP(RM)	92.5	08 Oct 2004	12 Oct 2004	92.50	3.854 days	0m
PRESPUD(PS)	25	12 Oct 2004	13 Oct 2004	117.50	4.896 days	158.0m
CONDUCTOR HOLE(CH)	9.5	15 Oct 2004	15 Oct 2004	127.00	5.292 days	192.0m
SURFACE HOLE(SH)	38.75	13 Oct 2004	16 Oct 2004	165.75	6.906 days	787.5m
SURFACE CASING(SC)	55.25	13 Oct 2004	17 Oct 2004	221.00	9.208 days	787.5m
INTERMEDIATE HOLE(IH)	220	17 Oct 2004	26 Oct 2004	441.00	18.375 days	2550.0m

WBM Data

Mud Type:	KCL/PHPA/POLYMER	API FL:	6cm³/30m	Cl:	44000	Solids:	2.2	Viscosity:	51sec/qt
Sample-From:	FL	Filter-Cake:	1/32nd"	K+C*1000:	8%	H2O:	93%	PV:	14cp
Time:	03:30	HTHP-FL:	0cm³/30m	Hard/Ca:	200	Oil:	0%	YP:	24lb/100ft²
Weight:	9.10ppg	HTHP-Cake:	0/32nd"	MBT:	6	Sand:	0.25	Gels 10s:	6
Temp:	120.0C°			PM:	0.6	pH:	9.4	Gels 10m:	10
				PF:	0.18	PHPA:	1ppb	Fann 003:	8
								Fann 006:	10
								Fann 100:	22
								Fann 200:	30
								Fann 300:	38
								Fann 600:	52

Comment: Raise pH of the active. Log

Bit # 4

Wear	I	O1	D	L	B	G	O2	R
	6	5	WT	A	X	I	ER	TD

Size (''):	12.25in	IADC#	M323	**Nozzles**		**Drilled over last 24 hrs**		**Calculated over Bit Run**	
Mfr:	HYCALOG	WOB(avg)	10.5klb	No.	Size	Progress	28.0m	Cum. Progress	1560.0m
Type:	PDC	RPM(avg)	91	5	14/32nd"	On Bottom Hrs	1.50h	Cum. On Btm Hrs	57.60h
Serial No.:	108993	F.Rate	861gpm			IADC Drill Hrs	1.75h	Cum IADC Drill Hrs	77.50h
Bit Model	DSX104HGW	SPP	2806psi			Total Revs	0	Cum Total Revs	0
Depth In	989.0m	TFA	0.752			ROP(avg)	18.67 m/hr	ROP(avg)	27.08 m/hr
Depth Out	2550.0m								

BHA # 3

Weight(Wet)	80.0klb	Length	276.8m	Torque(max)	0ft-lbs	D.C. (1) Ann Velocity	
Wt Below Jar(Wet)	50.0klb	String	260.0klb	Torque(Off.Btm)	0ft-lbs	D.C. (2) Ann Velocity	
		Pick-Up	0klb	Torque(On.Btm)	0ft-lbs	H.W.D.P. Ann Velocity	
		Slack-Off	0klb			D.P. Ann Velocity	

BHA Run Description: Bit, X/O, Motor, Float Sub, Roller Reamer, CDR, Power Pulse, Roller Reamer, 9-1/2" NMDC, X/O, 8x8" DC, 8" Jar, 2 x 8" DC, 8" Accelerator, 1 x 8" DC, X/O, 12 x 5" HWDP

Equipment	Length	OD	ID	Serial #	Comment
9.625in Motor	9.68m	12.13in	0in	2099	A962M7848GT w/ 12-1/8" stab
Float Sub	0.90m	9.50in	3.00in	3287	Ported Float
12.25in Roller Reamer	2.52m	12.25in	2.81in	XM066	
9.5in LWD	7.20m	9.50in	0in	9546	CDR9 + PWD
9.5in MWD	8.46m	9.50in	0in	W693	Power Pulse 9
12.25in Roller Reamer	2.52m	12.25in	2.81in	XM065	
9.5in Non Magnetic Drill Collar	9.20m	9.50in	2.81in	D173	
8in Jar	9.78m	8.06in	3.00in	48907C	
8in Accelerator	10.90m	8.00in	3.00in	DAH01586	

Survey

MD (m)	Incl Deg (deg)	Corr. Az (deg)	TVD (m)	'V' Sect (m)	Dogleg (deg/30m)	N/S (m)	E/W (m)	Tool Type
2273.18	1.01	323.23	2272.94	24.01	0.10	24.01	-14.55	MWD
2358.91	0.97	322.75	2358.66	25.19	0.01	25.19	-15.44	MWD
2445.35	0.96	329.95	2445.08	26.40	0.04	26.40	-16.24	MWD
2524.68	1.01	330.09	2524.40	27.59	0.02	27.59	-16.92	MWD

Bulk Stocks

Name	Unit	In	Used	Adjust	Balance
Fuel	MT	0	13	0	995.0
Drill Water	MT	632	0	-100	1,313.0
Potable Water	MT	0	27	0	273.0
Gel	MT	0	0	0	158.0
Cement	MT	0	0	0	209.0
Barite	MT	0	0	0	221.0

Personnel On Board

Company	Pax
Santos	7
Transocean	66
Anadrill	2
BHI	6
Dril-Quip	1
Halliburton	3
M.I	2
Weatherford	5
Subsea 7	3
Schlumberger Wireline	7
Santos	2
Total	104

Casing

OD	L.O.T. / F.I.T.	Csg Shoe (MD/TVD)	Cementing
30 "	0ppg / 0ppg	191.0m / 191.0m	
13 3/8"	13.20ppg / 0ppg	778.3m / 778.3m	

HSE Summary

Events	Date of Last	Days Since	Remarks
Abandon Drill	19 Oct 2004	7 Days	Weekly abandon rig drill.
BOP Test	08 Oct 2004	18 Days	Carried out 15000psi body test on BOP's. Tested all rams etc to 7500psi
Environmental Incident		0 Days	
Fire Drill	10 Oct 2004	16 Days	Simulated fire in Purifier room
First Aid		0 Days	
Lost Time Incident		0 Days	None
Safety Meeting	17 Oct 2004	9 Days	
Stop Cards	26 Oct 2004	0 Days	14 START Cards submitted

Marine

Weather check on 26 Oct 2004 at 24:00

Visibility	Wind Speed	Wind Dir.	Pressure	Air Temp.	Wave Height	Wave Dir.	Wave Period
8.00nm	32.0kn	200deg	1010bar	10.7C°	0m	000deg	0ft/sec

Roll	Pitch	Heave	Swell Height	Swell Dir.	Swell Period	Weather Comments
0.6deg	0.6deg	3.00m	4.6m	200deg	6.0ft/sec	

Rig Dir.	Ris. Tension	VDL	Comments
216.0deg	0klb	8523.0klb	

Boats	Arrived (date/time)	Departed (date/time)	Status	Bulks		
Lady Astrid			Portland	**Item**	**Unit**	**Quantity**
Lady Caroline			At Rig	**Item**	**Unit**	**Quantity**

Santos

DRILLING MORNING REPORT # 20
CALLISTER 01 (27 Oct 2004)

From : B.Houston / J. Young

Well Data

Country	Australia	M. Depth	2550.0m	Cur. Hole Size	12.250in	AFE Cost	
Field	Otway Basin	TVD	2550.0m	Casing OD	13.375in	AFE No.	
Drill Co.	Transocean	Progress	0m	Shoe TVD	778.0m	Daily Cost	
Rig	Jack Bates	Days from spud	14.50	F.I.T. / L.O.T.	0ppg / 13.20ppg	Cum Cost	
Wtr Dpth(LAT)	129.4m	Days on well	19.98			Planned TD	3629.0m
RT-ASL(LAT)	29.0m	Current Op @ 0600	Running 9-5/8" AER x NEW VAM casing crossover at 1501mRT.				
RT-ML	158.4m	Planned Op	Finish running the 9-5/8" casing, cement and pressure test the BOP's.				

Summary of Period 0000 to 2400 Hrs

Ran wireling logs, jetted BOP, pulled wear bushing and ran 9-5/8" casing.

Operations For Period 0000 Hrs to 2400 Hrs on 27 Oct 2004

Phse	Cls (RC)	Op	From	To	Hrs	Depth	Activity Description
IH	P	LOG	0000	0200	2.00	2550.0m	RIH to with logging suite. Unable to get wireline to TD, tools hung up at 2508mRT. Attempted to pass obstruction 3 times, unsuccessful.
IH	P	LOG	0200	0630	4.50	2550.0m	Log well from 2508m at 550m/hr. Resistivity tool failed at 1600m, called town to check requirements, decided to continue to log well without resisivity.
IH	P	LOG	0630	0815	1.75	2550.0m	Pulled tools to surface, removed radioactive source, laid out logging string and rigged down Schlumberger euipment.
IH	P	WH	0815	1045	2.50	2550.0m	Held JSA for running and retrieving the wellhead wear bushing. RIH with wear bushing retrieval tool and jetting sub to 152mRT. Jetted ram cavities and wellhead at maximum rate whilst boosting the riser.
IH	P	WH	1045	1130	0.75	2550.0m	Landed out wear bushing running tool with 20,000lbs and confirmed that the tool was latched with 10,000lbs overpull (marked datum on DP). Pulled wear bushing with 60,000lbs overpull and POOH with same.
IH	P	WH	1130	1200	0.50	2550.0m	Broke out wear bushing and running tool and laid out same. Cleared the rig floor of any excess equipment before running casing.
IH	P	CRN	1200	1430	2.50	2550.0m	Rigged up to run casing and held JSA for running casing operations.
IH	P	CRN	1430	2245	8.25	2550.0m	RIH with 9-5/8" 47ppf AER casing to 778m (13-3/8" casing shoe) at 7.5 jnts/hr. Recorded weights: Pick up - 260,000 lbs Slack off - 235,000lbs Static - 245,000 lbs
IH	P	CRN	2245	2400	1.25	2550.0m	Continued to run 9--5/8" 47ppf AER casing from 778m - 870m. Losses of 23bbls were sustained since the start of casing run (average ~2.3bbls/hr).

Operations For Period 0000 Hrs to 0600 Hrs on 28 Oct 2004

Phse	Cls (RC)	Op	From	To	Hrs	Depth	Activity Description
IH	P	CRN	0000	0600	6.00	2550.0m	Continued to run 9-5/8", 47ppf, AER to 1501m (117jnts). Average speed ~8jts/hr, losses of 2-3 bbls/hr. Weights: Pick up - 340,000 lbs Down - 340,000 lbs Static - 340,000 lbs

Phase Data to 2400hrs, 27 Oct 2004

Phase	Phase Hrs	Start On	Finish On	Cum Hrs	Cum Days	Max Depth
RIG MOVE/RIG-UP(RM)	92.5	08 Oct 2004	12 Oct 2004	92.50	3.854 days	0m
PRESPUD(PS)	25	12 Oct 2004	13 Oct 2004	117.50	4.896 days	158.0m
CONDUCTOR HOLE(CH)	9.5	15 Oct 2004	15 Oct 2004	127.00	5.292 days	192.0m
SURFACE HOLE(SH)	38.75	13 Oct 2004	16 Oct 2004	165.75	6.906 days	787.5m
SURFACE CASING(SC)	55.25	13 Oct 2004	17 Oct 2004	221.00	9.208 days	787.5m
INTERMEDIATE HOLE(IH)	244	17 Oct 2004	27 Oct 2004	465.00	19.375 days	2550.0m

WBM Data

Mud Type:	KCL/PHPA/POLYMER	API FL:	5cm³/30m	Cl:	45000	Solids:	2.1	Viscosity:	51sec/qt
Sample-From:	FL	Filter-Cake:	1/32nd"	K+C*1000:	8%	H2O:	93%	PV:	14cp
Time:	12:00	HTHP-FL:	0cm³/30m	Hard/Ca:	200	Oil:	0%	YP:	25lb/100ft²
Weight:	9.10ppg	HTHP-Cake:	0/32nd"	MBT:	6	Sand:	0.25	Gels 10s:	7
Temp:	120.0C°			PM:	0.6	pH:	9.2	Gels 10m:	10
				PF:	0.16	PHPA:	1ppb	Fann 003:	8
								Fann 006:	10
								Fann 100:	22
								Fann 200:	30
								Fann 300:	39
								Fann 600:	53

Comment: Dump and clean sandtraps

Survey

MD (m)	Incl Deg (deg)	Corr. Az (deg)	TVD (m)	'V' Sect (m)	Dogleg (deg/30m)	N/S (m)	E/W (m)	Tool Type
2273.18	1.01	323.23	2272.94	24.01	0.10	24.01	-14.55	MWD
2358.91	0.97	322.75	2358.66	25.19	0.01	25.19	-15.44	MWD
2445.35	0.96	329.95	2445.08	26.40	0.04	26.40	-16.24	MWD
2524.68	1.01	330.09	2524.40	27.59	0.02	27.59	-16.92	MWD

Bulk Stocks

Name	Unit	In	Used	Adjust	Balance
Fuel	MT	0	8	0	987.0
Drill Water	MT	0	20	0	1,293.0
Potable Water	MT	0	31	0	242.0
Gel	MT	0	0	0	158.0
Cement	MT	0	0	0	209.0
Barite	MT	0	0	0	221.0

Personnel On Board

Company	Pax
Santos	4
Transocean	68
Anadrill	2
BHI	6
Dril-Quip	1
Halliburton	2
M.I	2
Weatherford	5
Subsea 7	3
Schlumberger Wireline	2
Santos	2
Total	97

Casing

OD	L.O.T. / F.I.T.	Csg Shoe (MD/TVD)	Cementing
30 "	0ppg / 0ppg	191.0m / 191.0m	
13 3/8"	13.20ppg / 0ppg	778.3m / 778.3m	

HSE Summary

Events	Date of Last	Days Since	Remarks
Abandon Drill	19 Oct 2004	8 Days	Weekly abandon rig drill.
BOP Test	08 Oct 2004	19 Days	Carried out 15000psi body test on BOP's. Tested all rams etc to 7500psi
Environmental Incident		0 Days	
Fire Drill	10 Oct 2004	17 Days	Simulated fire in Purifier room
First Aid		0 Days	
Lost Time Incident		0 Days	None
Safety Meeting	17 Oct 2004	10 Days	
Stop Cards	27 Oct 2004	0 Days	18 START Cards submitted

Marine

Weather check on 27 Oct 2004 at 24:00

Visibility	Wind Speed	Wind Dir.	Pressure	Air Temp.	Wave Height	Wave Dir.	Wave Period
10.00nm	25.0kn	230deg	1023bar	12.5C°	0m	000deg	0ft/sec

Roll	Pitch	Heave	Swell Height	Swell Dir.	Swell Period	Weather Comments
0.7deg	0.7deg	3.00m	2.7m	210deg	6.0ft/sec	

Rig Dir.	Ris. Tension	VDL	Comments
216.0deg	0klb	8470.0klb	

Boats	Arrived (date/time)	Departed (date/time)	Status	Bulks		
Lady Caroline			At Rig	Item	Unit	Quantity
Lady Astrid			At Rig	Item	Unit	Quantity

Helicopter Movement

Flight #	Time	Destination	Comment	Pax
BHQ	16:10	Jack Bates		3
BHQ	16:21	Essendon		8
BHI	16:58	Jack Bates		6
BHI	17:10	Essendon		8

Santos

DRILLING MORNING REPORT # 21
CALLISTER 01 (28 Oct 2004)

From : B.Houston / J. Young

Well Data

Country	Australia	M. Depth	2550.0m	Cur. Hole Size	12.250in	AFE Cost	
Field	Otway Basin	TVD	2550.0m	Casing OD	13.375in	AFE No.	
Drill Co.	Transocean	Progress	0m	Shoe TVD	778.0m	Daily Cost	
Rig	Jack Bates	Days from spud	15.50	F.I.T. / L.O.T.	0ppg / 13.20ppg	Cum Cost	
Wtr Dpth(LAT)	129.4m	Days on well	20.98			Planned TD	3629.0m
RT-ASL(LAT)	29.0m	Current Op @ 0600	Breaking and laying out the cement head and the 12-1/4" BHA.				
RT-ML	158.4m	Planned Op	Lay out 12-1/4" BHA, make up 8-1/2" BHA, RIH and drill out shoe track, perform LOT and drill ahead.				

Summary of Period 0000 to 2400 Hrs

Ran 9-5/8" casing, cemented, set and pressure tested seal assembly and pressure tested BOP's.

Operations For Period 0000 Hrs to 2400 Hrs on 28 Oct 2004

Phse	Cls (RC)	Op	From	To	Hrs	Depth	Activity Description
IH	P	CRN	0000	0600	6.00	2550.0m	Continued to run 9-5/8", 47ppf, AER to 1501m (117jnts). Average speed ~8jts/hr, losses of 2-3 bbls/hr.
IC	P	CRN	0600	1200	6.00	2550.0m	Ran 9-5/8" AER x 9-5/8" New Vam Crossover and 73 joints of New Vam 9-5/8" casing, filling every 4 joints. Circulated casing at 20spm (300psi) with no increase in losses. Total losses for casing job: 58bbls.
IC	P	CRN	1200	1500	3.00	2550.0m	Changed out handling equipment and picked up casing hanger and seal assembly. RIH casing with CHSART on landing string and washed down from 2508m to landing point. Set down casing weight and checked against the datum mark, OK.
IC	P	CMC	1500	1730	2.50	2550.0m	Held tool box meeting prior to cement job and cemented 9-5/8" casing. Pumped 20bbl spacer, 42bbl of 12.5ppg Lead slurry, 34bbls of 15.8ppg tail slurry and displaced cement with 571 bbl, but did not bump the plug. Total losses during cementing: 20bbls
IC	P	WH	1730	1815	0.75	2550.0m	Set and tested 9-5/8" casing hanger seal assembly to 5000psi for 10 minutes.
PH	P	PT	1815	2200	3.75	2550.0m	Pressure tested BOP pipe rams and annular. Good tests. Low: 250psi for 5 minutes High: 5000psi for 15 minutes
IC	P	CRN	2200	2300	1.00	2550.0m	Picked up and sheared out CHSART with 60,000lbs overpull. Flushed 5 bbls around the casing hanger and sat CHSART back down to re-check seal integrity. Unable to get a test.
	P	CRN	2300	2400	1.00	2550.0m	Changed out elevators back to manuals due to automatic elevators not working. POOH with landing string and CHSART.

Operations For Period 0000 Hrs to 0600 Hrs on 29 Oct 2004

Phse	Cls (RC)	Op	From	To	Hrs	Depth	Activity Description
PH	P	WH	0000	0030	0.50	2550.0m	Continued to POOH landing string and CHSART. Flushed and laid out same.
PH	P	WH	0030	0145	1.25	2550.0m	Picked up 8-1/2" wear bushing and running tool with 9-5/8" casing cup tester. RIH and landed out wear bushing. Pumped 5 bbls down kill line to the trip tank to ensure circulation and then shut the 5" pipe rams. Attempted to get a 5000psi pressure test on the seal assembly, unsuccessful.
PH	P	WH	0145	0230	0.75	2550.0m	Picked up and sheared off (30,000lbs overpull) the wear bushing and POOH with running tool. Confirmed that the wear bushing installed.
PH	P	PT	0230	0330	1.00	2550.0m	Performed a low pressure test on the casing (250 psi - 5 mins), OK. Gradually ramped up the pressure to ensure seal assembly was still set. Conduct high pressure test against shear rams (5000psi - 15mins), OK.
PH	P	PT	0330	0500	1.50	2550.0m	Pressure tested surface equipment to 250psi - 5 mins low, 5000psi - 15 mins high.
PH	P	HBHA	0500	0600	1.00	2550.0m	Broke out cement stand, 12-1/4" FEWD and laid out same.

Phase Data to 2400hrs, 28 Oct 2004

Phase	Phase Hrs	Start On	Finish On	Cum Hrs	Cum Days	Max Depth
RIG MOVE/RIG-UP(RM)	92.5	08 Oct 2004	12 Oct 2004	92.50	3.854 days	0m
PRESPUD(PS)	25	12 Oct 2004	13 Oct 2004	117.50	4.896 days	158.0m
CONDUCTOR HOLE(CH)	9.5	15 Oct 2004	15 Oct 2004	127.00	5.292 days	192.0m
SURFACE HOLE(SH)	38.75	13 Oct 2004	16 Oct 2004	165.75	6.906 days	787.5m
SURFACE CASING(SC)	55.25	13 Oct 2004	17 Oct 2004	221.00	9.208 days	787.5m
INTERMEDIATE HOLE(IH)	250	17 Oct 2004	28 Oct 2004	471.00	19.625 days	2550.0m
INTERMEDIATE CASING(IC)	13.25	28 Oct 2004	28 Oct 2004	484.25	20.177 days	2550.0m
PRODUCTION HOLE(PH)	3.75	28 Oct 2004	28 Oct 2004	488.00	20.333 days	2550.0m
	1	28 Oct 2004	28 Oct 2004	489.00	20.375 days	2550.0m

WBM Data

Mud Type:	KCL/PHPA/POLYMER	API FL:	6cm³/30m	Cl:	45000	Solids:	2.1	Viscosity:	54sec/qt
Sample-From:	FL	Filter-Cake:	1/32nd"	K+C*1000:	8%	H2O:	93%	PV:	13cp
Time:	12:00	HTHP-FL:	0cm³/30m	Hard/Ca:	190	Oil:	0%	YP:	26lb/100ft²
Weight:	9.10ppg	HTHP-Cake:	0/32nd"	MBT:	6	Sand:	0.25	Gels 10s:	7
Temp:	120.0C°			PM:	0.5	pH:	9	Gels 10m:	10
				PF:	0.16	PHPA:	1ppb	Fann 003:	9
								Fann 006:	10
								Fann 100:	22
								Fann 200:	30
								Fann 300:	39
								Fann 600:	52

Comment: Run 9 5/8" Casing and cement.No mud cost.

Survey

MD (m)	Incl Deg (deg)	Corr. Az (deg)	TVD (m)	'V' Sect (m)	Dogleg (deg/30m)	N/S (m)	E/W (m)	Tool Type
2273.18	1.01	323.23	2272.94	24.01	0.10	24.01	-14.55	MWD
2358.91	0.97	322.75	2358.66	25.19	0.01	25.19	-15.44	MWD
2445.35	0.96	329.95	2445.08	26.40	0.04	26.40	-16.24	MWD
2524.68	1.01	330.09	2524.40	27.59	0.02	27.59	-16.92	MWD

Bulk Stocks

Name	Unit	In	Used	Adjust	Balance
Fuel	MT	0	7	0	980.0
Drill Water	MT	0	116	0	1,177.0
Potable Water	MT	0	12	0	230.0
Gel	MT	0	0	0	158.0
Cement	MT	0	12	0	197.0
Barite	MT	0	0	0	221.0

Personnel On Board

Company	Pax
Santos	4
Transocean	68
Anadrill	2
BHI	6
Dril-Quip	1
Halliburton	2
M.I	2
Weatherford	5
Subsea 7	3
Schlumberger Wireline	2
Santos	2
Total	97

Casing

OD	L.O.T. / F.I.T.	Csg Shoe (MD/TVD)	Cementing
9 5/8"	0ppg / 0ppg	0m / 0m	
30 "	0ppg / 0ppg	191.0m / 191.0m	
13 3/8"	13.20ppg / 0ppg	778.3m / 778.3m	

HSE Summary

Events	Date of Last	Days Since	Remarks
Abandon Drill	19 Oct 2004	9 Days	Weekly abandon rig drill.
BOP Test	28 Oct 2004	0 Days	Tested all rams etc to 250 psi low and 5000psi high.
Environmental Incident		0 Days	
Fire Drill	10 Oct 2004	18 Days	Simulated fire in Purifier room
First Aid		0 Days	
Lost Time Incident		0 Days	None
Safety Meeting	17 Oct 2004	11 Days	
Stop Cards	27 Oct 2004	1 Day	4 START Cards submitted

Marine

Weather check on 28 Oct 2004 at 24:00

Visibility	Wind Speed	Wind Dir.	Pressure	Air Temp.	Wave Height	Wave Dir.	Wave Period
12.00nm	12.0kn	160deg	1027bar	12.3C°	0m	000deg	0ft/sec

Roll	Pitch	Heave	Swell Height	Swell Dir.	Swell Period	Weather Comments
0.2deg	0.6deg	3.00m	3.0m	160deg	10.0ft/sec	

Rig Dir.	Ris. Tension	VDL	Comments
216.0deg	0klb	8631.0klb	

Boats	Arrived (date/time)	Departed (date/time)	Status	Bulks		
Lady Astrid			At Rig	Item	Unit	Quantity
Lady Caroline			Portland	Item	Unit	Quantity

Santos

DRILLING MORNING REPORT # 22
CALLISTER 01 (29 Oct 2004)

From : B.Houston / J. Young

Well Data

Country	Australia	M. Depth	2550.0m	Cur. Hole Size	12.250in	AFE Cost	
Field	Otway Basin	TVD	2550.0m	Casing OD	13.375in	AFE No.	
Drill Co.	Transocean	Progress	0m	Shoe TVD	778.0m	Daily Cost	
Rig	Jack Bates	Days from spud	16.50	F.I.T. / L.O.T.	0ppg / 13.20ppg	Cum Cost	
Wtr Dpth(LAT)	129.4m	Days on well	21.98			Planned TD	3629.0m
RT-ASL(LAT)	29.0m	Current Op @ 0600	Preparing to drill ahead in 8-1/2" hole.				
RT-ML	158.4m	Planned Op	Drill ahead in 8-1/2" hole.				

Summary of Period 0000 to 2400 Hrs

Ran wear bushing, tested surface equipment, laid out 12-1/4" BHA, made up 8-1/2" BHA, RIH to top of cement and drilled down to float collar at 2510mRT.

Operations For Period 0000 Hrs to 2400 Hrs on 29 Oct 2004

Phse	Cls (RC)	Op	From	To	Hrs	Depth	Activity Description
PH	P	WH	0000	0030	0.50	2550.0m	Continued to POOH landing string and CHSART. Flushed and laid out same.
PH	P	WH	0030	0145	1.25	2550.0m	Picked up 8-1/2" wear bushing and running tool with 9-5/8" casing cup tester. RIH and landed out wear bushing. Pumped 5 bbls down kill line to the trip tank to ensure circulation and then shut the 5" pipe rams. Attempted to get a 5000psi pressure test on the seal assembly, unsuccessful.
PH	P	WH	0145	0230	0.75	2550.0m	Picked up and sheared off (30,000lbs overpull) the wear bushing and POOH with running tool. Confirmed that the wear bushing installed.
PH	P	PT	0230	0330	1.00	2550.0m	Performed a low pressure test on the casing (250 psi - 5 mins), OK. Gradually ramped up the pressure to ensure seal assembly was still set. Conduct high pressure test against shear rams (5000psi - 15mins), OK.
PH	P	PT	0330	0500	1.50	2550.0m	Pressure tested surface equipment to 250psi - 5 mins low, 5000psi - 15 mins high.
PH	P	HBHA	0500	1030	5.50	2550.0m	Broke out cement stand, 12-1/4" FEWD and laid out same.
PH	P	HBHA	1030	1500	4.50	2550.0m	Held JSA and made up 8-1/2" BHA.
PH	P	HBHA	1500	1530	0.50	2550.0m	Shallow tested FEWD, successful test.
PH	P	TI	1530	2000	4.50	2550.0m	RIH with 8-1/2" BHA to 2436m.
PH	P	TI	2000	2030	0.50	2550.0m	Washed and reamed down and tagged TOC at 2450m.
PH	P	DC	2030	2400	3.50	2550.0m	Drilled out cement to the top of the float collar (2510m).

Operations For Period 0000 Hrs to 0600 Hrs on 30 Oct 2004

Phse	Cls (RC)	Op	From	To	Hrs	Depth	Activity Description
PH	P	DFS	0000	0045	0.75	2553.0m	Drilled out 9-5/8" casing float collar.
PH	P	DFS	0045	0130	0.75	2553.0m	Drilled out the shoe track from 2510m - 2537m.
PH	P	DFS	0130	0230	1.00	2553.0m	Drilled out the casing shoe, rat hole and worked the BHA through the casing shoe x3.
PH	P	LOT	0230	0400	1.50	2553.0m	Took survey, pulled BHA back inside the shoe and circulated bottoms up (cuttings sample - 100% siltstone).
PH	P	LOT	0400	0600	2.00	2553.0m	Rigged up for LOT, conducted LOT (EMW = 14.7ppg). Rigged down LOT equipment and prepared to drill ahead in 8-1/2" hole.

Phase Data to 2400hrs, 29 Oct 2004

Phase	Phase Hrs	Start On	Finish On	Cum Hrs	Cum Days	Max Depth
RIG MOVE/RIG-UP(RM)	92.5	08 Oct 2004	12 Oct 2004	92.50	3.854 days	0m
PRESPUD(PS)	25	12 Oct 2004	13 Oct 2004	117.50	4.896 days	158.0m
CONDUCTOR HOLE(CH)	9.5	15 Oct 2004	15 Oct 2004	127.00	5.292 days	192.0m
SURFACE HOLE(SH)	38.75	13 Oct 2004	16 Oct 2004	165.75	6.906 days	787.5m
SURFACE CASING(SC)	55.25	13 Oct 2004	17 Oct 2004	221.00	9.208 days	787.5m
INTERMEDIATE HOLE(IH)	250	17 Oct 2004	28 Oct 2004	471.00	19.625 days	2550.0m
INTERMEDIATE CASING(IC)	13.25	28 Oct 2004	28 Oct 2004	484.25	20.177 days	2550.0m
	1	28 Oct 2004	28 Oct 2004	485.25	20.219 days	2550.0m
PRODUCTION HOLE(PH)	27.75	28 Oct 2004	29 Oct 2004	513.00	21.375 days	2550.0m

WBM Data

Mud Type: KCL/PHPA/POLYMER		API FL:	6cm³/30m	Cl:	45000	Solids:	2.1	Viscosity:	54sec/qt
Sample-From:	FL	Filter-Cake:	1/32nd"	K+C*1000:	8%	H2O:	93%	PV:	14cp
Time:	12:00	HTHP-FL:	0cm³/30m	Hard/Ca:	170	Oil:	0%	YP:	24lb/100ft²
Weight:	9.20ppg	HTHP-Cake:	0/32nd"	MBT:	5	Sand:	0.25	Gels 10s:	7
Temp:	120.0C°			PM:	0.5	pH:	9	Gels 10m:	9
				PF:	0.16	PHPA:	1ppb	Fann 003:	9
								Fann 006:	10
								Fann 100:	21
								Fann 200:	30
								Fann 300:	38
								Fann 600:	52

Comment: Build Volume. Treat cement contamination.

Bit # 5

Wear	I	O1	D	L	B	G	O2	R

Size (''):	8.50in	IADC#		Nozzles		Drilled over last 24 hrs		Calculated over Bit Run	
Mfr:	HYCALOG	WOB(avg)	0klb	No.	Size	Progress	0m	Cum. Progress	0m
Type:	PDC	RPM(avg)	0	2	10/32nd"	On Bottom Hrs	0h	Cum. On Btm Hrs	0h
Serial No.:	109886	F.Rate	0gpm	5	14/32nd"	IADC Drill Hrs	0h	Cum IADC Drill Hrs	0h
Bit Model	RSX272	SPP	0psi			Total Revs	0	Cum Total Revs	0
Depth In	2550.0m	TFA	0.905			ROP(avg)	N/A	ROP(avg)	0.00 m/hr
Depth Out	0m								

BHA # 4

Weight(Wet)	60.0klb	Length	295.5m	Torque(max)	0ft-lbs	D.C. (1) Ann Velocity	
Wt Below Jar(Wet)	40.0klb	String	60.0klb	Torque(Off.Btm)	0ft-lbs	D.C. (2) Ann Velocity	
		Pick-Up	60.0klb	Torque(On.Btm)	0ft-lbs	H.W.D.P. Ann Velocity	
		Slack-Off	60.0klb			D.P. Ann Velocity	

Equipment	Length	OD	ID	Serial #	Comment
8.5in Bit	0.25m	8.50in	2.50in	109886	
8.5in String Stab	1.83m	8.50in	2.25in	XM094	Roller Reamer with ported float
6.75in FEWD Tools	16.10m	8.38in	5.13in	606/V880	
8.5in String Stab	1.94m	8.50in	2.25in	XM088	Roller Reamer
6.5in DC	127.17m	6.50in	2.63in		
6.5in Jars	9.37m	6.50in	2.75in	DAH03584	
6.5in DC	27.23m	6.50in	2.63in		
X/O	0.81m	8.00in	2.69in	X/O12	
5in HWDP	110.77m	5.00in	3.00in		

Survey

MD (m)	Incl Deg (deg)	Corr. Az (deg)	TVD (m)	'V' Sect (m)	Dogleg (deg/30m)	N/S (m)	E/W (m)	Tool Type
2273.18	1.01	323.23	2272.94	24.01	0.10	24.01	-14.55	MWD
2358.91	0.97	322.75	2358.66	25.19	0.01	25.19	-15.44	MWD
2445.35	0.96	329.95	2445.08	26.40	0.04	26.40	-16.24	MWD
2524.68	1.01	330.09	2524.40	27.59	0.02	27.59	-16.92	MWD

Bulk Stocks

Name	Unit	In	Used	Adjust	Balance
Fuel	MT	0	9	0	971.0
Drill Water	MT	0	11	0	1,166.0
Potable Water	MT	181	28	0	383.0
Gel	MT	0	0	0	158.0
Cement	MT	0	0	0	197.0
Barite	MT	0	0	0	221.0

Personnel On Board

Company	Pax
Santos	5
Transocean	60
Anadrill	2
BHI	6
Dril-Quip	1
Halliburton	2
M.I	2
Weatherford	1
Subsea 7	3
Schlumberger Wireline	1
Santos	3
Total	86

Casing

OD	L.O.T. / F.I.T.	Csg Shoe (MD/TVD)	Cementing
9 5/8"	0ppg / 0ppg	0m / 0m	
30 "	0ppg / 0ppg	191.0m / 191.0m	
13 3/8"	13.20ppg / 0ppg	778.3m / 778.3m	

HSE Summary

Events	Date of Last	Days Since	Remarks
Abandon Drill	19 Oct 2004	10 Days	Weekly abandon rig drill.
BOP Test	28 Oct 2004	1 Day	Tested all rams etc to 250 psi low and 5000psi high.
Environmental Incident		0 Days	
Fire Drill	10 Oct 2004	19 Days	Simulated fire in Purifier room
First Aid		0 Days	
Lost Time Incident		0 Days	None
Safety Meeting	17 Oct 2004	12 Days	
Stop Cards	27 Oct 2004	2 Days	6 START Cards submitted

Marine

Weather check on 29 Oct 2004 at 24:00

Visibility	Wind Speed	Wind Dir.	Pressure	Air Temp.	Wave Height	Wave Dir.	Wave Period
10.00nm	16.0kn	130deg	1024bar	13.0C°	0m	000deg	0ft/sec

Roll	Pitch	Heave	Swell Height	Swell Dir.	Swell Period	Weather Comments
0.2deg	0.4deg	3.00m	2.4m	150deg	6.0ft/sec	

Rig Dir.	Ris. Tension	VDL	Comments
216.0deg	0klb	8922.0klb	

Boats	Arrived (date/time)	Departed (date/time)	Status	Bulks		
Lady Caroline			At Rig	**Item**	**Unit**	**Quantity**
Lady Astrid			At Rig	**Item**	**Unit**	**Quantity**

Helicopter Movement

Flight #	Time	Destination	Comment	Pax
BHI	15:25	Jack Bates		0
BHI	15:36	Essendon		9
BHQ	15:40	Jack Bates		7
BHQ	15:57	Essendon		9

Santos

DRILLING MORNING REPORT # 23
CALLISTER 01 (30 Oct 2004)

From : B.Houston / J. Young

Well Data

Country	Australia	M. Depth	2550.0m	Cur. Hole Size	8.500in	AFE Cost	
Field	Otway Basin	TVD	2550.0m	Casing OD	9.625in	AFE No.	
Drill Co.	Transocean	Progress	112.0m	Shoe TVD	2538.0m	Daily Cost	
Rig	Jack Bates	Days from spud	17.50	F.I.T. / L.O.T.	0ppg / 14.70ppg	Cum Cost	
Wtr Dpth(LAT)	129.4m	Days on well	22.98			Planned TD	3629.0m
RT-ASL(LAT)	29.0m	Current Op @ 0600	Running in hole with a new 8-1/2" bit (DSX104).				
RT-ML	158.4m	Planned Op	RIH with new 8-1/2" bit and drill ahead.				

Summary of Period 0000 to 2400 Hrs

Drilled out shoe track, rat hole and 3m of new formation. Conducted LOT (EMW = 14.7ppg). Drilled ahead in 8-1/2" hole from 2553m to 2662m. POOH to change bit.

Operations For Period 0000 Hrs to 2400 Hrs on 30 Oct 2004

Phse	Cls (RC)	Op	From	To	Hrs	Depth	Activity Description
PH	P	DFS	0000	0045	0.75	2553.0m	Drilled out 9-5/8" casing float collar.
PH	P	DFS	0045	0130	0.75	2553.0m	Drilled out the shoe track from 2510m - 2538m.
PH	P	DFS	0130	0230	1.00	2553.0m	Drilled out the casing shoe, rat hole and worked the BHA through the casing shoe x3.
PH	P	LOT	0230	0400	1.50	2553.0m	Took survey, pulled BHA back inside the shoe and circulated bottoms up (cuttings sample - 100% siltstone).
PH	P	LOT	0400	0615	2.25	2553.0m	Rigged up for LOT, conducted LOT (EMW = 14.7ppg). Took SCR's, rigged down LOT equipment and prepared to drill ahead in 8-1/2" hole.
PH	P	DA	0615	1200	5.75	2634.0m	Drilled ahead in 8-1/2" hole from 2553m - 2634m, surveyed every stand and backreamed as required. Average Drilling Parameters: WOB: 12,100 lbs; Torque: 9,100 ft.lbs; RPM: 118 rpm; Flow: 634 gpm
PH	P	DA	1200	1430	2.50	2659.0m	Drilled ahead in 8-1/2" hole from 2634m - 2659m, surveyed every stand and backreamed as required. Average Drilling Parameters: WOB: 12,700 lbs; Torque: 9,500 ft.lbs; RPM: 128 rpm; Flow: 700 gpm
PH	P	DA	1430	1645	2.25	2662.0m	Drilled ahead in 8-1/2" hole from 2659m - 2662m. Varied parameters to increase drilling rate, but unable to drill ahead.
PH	P	LOT	1645	1900	2.25	2662.0m	POOH with 8-1/2" assembly from 2662m to 2512m, flow checked at the 9-5/8" casing shoe, continued to POOH to 2094m and pumped slug before shift change.
PH	TP (RE)	RR	1900	2115	2.25	2662.0m	Held toolbox meeting for new crew, pulled one stand and found a problem with the top automatic pipe racker. Investigated the problem whilst serviceing the top drive. Repaired the top pipe racker, replacing 2 sheared pins.
PH	P	LOT	2115	2400	2.75	2662.0m	Continued to POOH with 8-1/2" assembly from 2094m to 495m. Flow checked the well before pulling the 8-1/2" BHA through the BOP's.

Operations For Period 0000 Hrs to 0600 Hrs on 31 Oct 2004

Phse	Cls (RC)	Op	From	To	Hrs	Depth	Activity Description
PH	P	HBHA	0000	0200	2.00	2662.0m	POOH and racked back 8-1/2" BHA. Downloaded FEWD and broke off bit. Bit was balled up between 2 blades with a hard clay.
PH	P	TO	0200	0300	1.00	2662.0m	Updated clocks to reflect 1 hour change due to daylight savings taking effect.
PH	P	HBHA	0300	0345	0.75	2662.0m	Bit was balled up between 2 blades with a hard clay. Cleaned out and inspected the bit and due to a few cutters being slightly chipped/worn a new bit was run (DSX104).
PH	P	HBHA	0345	0600	2.25	2662.0m	Made up 8-1/2" BHA.

Phase Data to 2400hrs, 30 Oct 2004

Phase	Phase Hrs	Start On	Finish On	Cum Hrs	Cum Days	Max Depth
RIG MOVE/RIG-UP(RM)	92.5	08 Oct 2004	12 Oct 2004	92.50	3.854 days	0m
PRESPUD(PS)	25	12 Oct 2004	13 Oct 2004	117.50	4.896 days	158.0m
CONDUCTOR HOLE(CH)	9.5	15 Oct 2004	15 Oct 2004	127.00	5.292 days	192.0m
SURFACE HOLE(SH)	38.75	13 Oct 2004	16 Oct 2004	165.75	6.906 days	787.5m
SURFACE CASING(SC)	55.25	13 Oct 2004	17 Oct 2004	221.00	9.208 days	787.5m
INTERMEDIATE HOLE(IH)	250	17 Oct 2004	28 Oct 2004	471.00	19.625 days	2550.0m
INTERMEDIATE CASING(IC)	13.25	28 Oct 2004	28 Oct 2004	484.25	20.177 days	2550.0m
	1	28 Oct 2004	28 Oct 2004	485.25	20.219 days	2550.0m
PRODUCTION HOLE(PH)	51.75	28 Oct 2004	30 Oct 2004	537.00	22.375 days	2662.0m

WBM Data

Mud Type: KCL/PHPA/POLYMER	API FL: 5cm³/30m	Cl: 44000	Solids: 4.6	Viscosity:	55sec/qt
Sample-From: FL	Filter-Cake: 1/32nd"	K+C*1000: 7%	H2O: 93%	PV:	13cp
Time: 17:30	HTHP-FL: 0cm³/30m	Hard/Ca: 440	Oil: 0%	YP:	23lb/100ft²
Weight: 9.40ppg	HTHP-Cake: 0/32nd"	MBT: 7	Sand: 0.5	Gels 10s:	5
Temp: 120.0C°		PM: 1.8	pH: 11	Gels 10m:	12
		PF: 0.2	PHPA: 1ppb	Fann 003:	5
				Fann 006:	7
				Fann 100:	22
				Fann 200:	29
				Fann 300:	36
				Fann 600:	49

Comment: Add Glycol.Some air in the mud. Shut down mixing pumps and add Defoamer.

Bit # 5

Wear	I	O1	D	L	B	G	O2	R

Size (''):	8.50in	IADC#		Nozzles		Drilled over last 24 hrs		Calculated over Bit Run	
Mfr:	HYCALOG	WOB(avg)	12710.0klb	No.	Size	Progress	112.0m	Cum. Progress	112.0m
Type:	PDC	RPM(avg)	130	2	10/32nd"	On Bottom Hrs	5.30h	Cum. On Btm Hrs	5.30h
Serial No.:	109886	F.Rate	700gpm	5	14/32nd"	IADC Drill Hrs	9.75h	Cum IADC Drill Hrs	9.75h
Bit Model	RSX272	SPP	2421psi			Total Revs	0	Cum Total Revs	0
Depth In	2550.0m	TFA	0.905			ROP(avg)	21.13 m/hr	ROP(avg)	21.13 m/hr
Depth Out									

BHA # 4

Weight(Wet)	60.0klb	Length	295.5m	Torque(max)	0ft-lbs	D.C. (1) Ann Velocity	
Wt Below Jar(Wet)	40.0klb	String	60.0klb	Torque(Off.Btm)	0ft-lbs	D.C. (2) Ann Velocity	
		Pick-Up	60.0klb	Torque(On.Btm)	0ft-lbs	H.W.D.P. Ann Velocity	
		Slack-Off	60.0klb			D.P. Ann Velocity	

Equipment	Length	OD	ID	Serial #	Comment
8.5in Bit	0.25m	8.50in	2.50in	109886	
8.5in String Stab	1.83m	8.50in	2.25in	XM094	Roller Reamer with ported float
6.75in FEWD Tools	16.10m	8.38in	5.13in	606/V880	
8.5in String Stab	1.94m	8.50in	2.25in	XM088	Roller Reamer
6.5in DC	127.17m	6.50in	2.63in		
6.5in Jars	9.37m	6.50in	2.75in	DAH03584	
6.5in DC	27.23m	6.50in	2.63in		
X/O	0.81m	8.00in	2.69in	X/O12	
5in HWDP	110.77m	5.00in	3.00in		

Survey

MD (m)	Incl Deg (deg)	Corr. Az (deg)	TVD (m)	'V' Sect (m)	Dogleg (deg/30m)	N/S (m)	E/W (m)	Tool Type
2445.35	0.96	329.95	2445.08	26.40	0.04	26.40	-16.24	MWD
2524.68	1.01	330.09	2524.40	27.59	0.02	27.59	-16.92	MWD
2559.17	0.98	331.10	2558.89	28.09	0.03	28.09	-17.21	MWD
2616.28	1.09	335.82	2615.99	29.01	0.07	29.02	-17.67	MWD

Bulk Stocks

Name	Unit	In	Used	Adjust	Balance
Fuel	MT	0	15	0	956.0
Drill Water	MT	0	10	0	1,156.0
Potable Water	MT	0	42	0	341.0
Gel	MT	0	0	0	158.0
Cement	MT	0	0	0	197.0
Barite	MT	0	7	0	214.0

Personnel On Board

Company	Pax
Santos	5
Transocean	60
Anadrill	2
BHI	6
Dril-Quip	1
Halliburton	2
M.I	2
Weatherford	1
Subsea 7	3
Schlumberger Wireline	1
Santos	3
Total	86

Casing

OD	L.O.T. / F.I.T.	Csg Shoe (MD/TVD)	Cementing
30 "	0ppg / 0ppg	191.0m / 191.0m	
13 3/8"	13.20ppg / 0ppg	778.3m / 778.3m	
9 5/8"	14.72ppg / 0ppg	2537.0m / 2537.0m	

HSE Summary

Events	Date of Last	Days Since	Remarks
Abandon Drill	19 Oct 2004	11 Days	Weekly abandon rig drill.
BOP Test	28 Oct 2004	2 Days	Tested all rams etc to 250 psi low and 5000psi high.
Environmental Incident		0 Days	
Fire Drill	10 Oct 2004	20 Days	Simulated fire in Purifier room
First Aid		0 Days	
Lost Time Incident		0 Days	None
Safety Meeting	17 Oct 2004	13 Days	
Stop Cards	30 Oct 2004	0 Days	4 START Cards submitted

Marine

Weather check on 30 Oct 2004 at 24:00

Visibility	Wind Speed	Wind Dir.	Pressure	Air Temp.	Wave Height	Wave Dir.	Wave Period
10.00nm	16.0kn	130deg	1024bar	13.0C°	0m	000deg	0ft/sec

Roll	Pitch	Heave	Swell Height	Swell Dir.	Swell Period	Weather Comments
0.2deg	0.4deg	3.00m	2.4m	150deg	6.0ft/sec	

Rig Dir.	Ris. Tension	VDL	Comments
216.0deg	0klb	8922.0klb	

Boats	Arrived (date/time)	Departed (date/time)	Status	Bulks		
Lady Caroline			At Rig	**Item**	**Unit**	**Quantity**
Lady Astrid			Portland	**Item**	**Unit**	**Quantity**

Santos

DRILLING MORNING REPORT # 24
CALLISTER 01 (31 Oct 2004)

From : B.Houston / J. Young

Well Data

Country	Australia	M. Depth	3003.0m	Cur. Hole Size	8.500in	AFE Cost	
Field	Otway Basin	TVD	3003.0m	Casing OD	9.625in	AFE No.	
Drill Co.	Transocean	Progress	341.0m	Shoe TVD	2538.0m	Daily Cost	
Rig	Jack Bates	Days from spud	18.50	F.I.T. / L.O.T.	0ppg / 14.70ppg	Cum Cost	
Wtr Dpth(LAT)	129.4m	Days on well	23.98			Planned TD	3629.0m
RT-ASL(LAT)	29.0m	Current Op @ 0600	Drilling ahead in 8.5" hole at 3052m				
RT-ML	158.4m	Planned Op	Contine to drill ahead in 8.5" hole to TD (+/- 3630m).				

Summary of Period 0000 to 2400 Hrs

Changed out PDC bit, RIH back to bottom and drilled ahead from 2662m to 3003m.

Operations For Period 0000 Hrs to 2400 Hrs on 31 Oct 2004

Phse	Cls (RC)	Op	From	To	Hrs	Depth	Activity Description
PH	P	HBHA	0000	0200	2.00	2662.0m	POOH and racked back 8-1/2" BHA. Downloaded FEWD and broke off bit. Bit was balled up between 2 blades with a hard clay.
PH	P	TO	0200	0300	1.00	2662.0m	Updated clocks to reflect 1 hour change due to daylight savings taking effect.
PH	P	HBHA	0300	0345	0.75	2662.0m	Bit was balled up between 2 blades with a hard clay. Cleaned out and inspected the bit and due to a few cutters being slightly chipped/worn a new bit was run (DSX104).
PH	P	HBHA	0345	0615	2.50	2662.0m	Made up new bit and RIH with the 8-1/2" BHA.
PH	P	TI	0615	1130	5.25	2662.0m	RIH with 8-1/2" assembly to 2645m. Washed down from 2645m to TD (2662m)
PH	P	DA	1130	1800	6.50	2836.0m	Drilled 8-1/2" hole from 2662m to 2836m and reamed as required. Surveyed every 3rd stand. Average Drilling Parameters: WOB: 15,000 lbs; RPM: 127 rpm; Torque: 9,900 ft.lbs; Flow: 708 gpm.
PH	P	DA	1800	2400	6.00	3003.0m	Drilled 8-1/2" hole from 2836m to 3003m and reamed as required. Surveyed every 3rd stand. Average Drilling Parameters: WOB: 15,000 lbs; RPM: 129 rpm; Torque: 11,600 ft.lbs; Flow: 698 gpm.

Operations For Period 0000 Hrs to 0600 Hrs on 01 Nov 2004

Phse	Cls (RC)	Op	From	To	Hrs	Depth	Activity Description
PH	TP (RE)	CMD	0000	0100	1.00	3003.0m	Unable to add barite due to a blockage in bulk flowline.
PH	TP (DFC)	CMD	0100	0315	2.25	3003.0m	Increased the mud weight up from 10.0ppg to 10.3ppg as per weight up schedule.
PH	P	DA	0315	0600	2.75	3003.0m	Drilled 8-1/2" hole from 3003m to 3052m and reamed as required. Surveyed every 3rd stand. Continued to increase mud weight as per schedule. Average Drilling Parameters: WOB: 18,000 lbs; RPM: 127 rpm; Torque: 9,400 ft.lbs; Flow: 698 gpm.

Phase Data to 2400hrs, 31 Oct 2004

Phase	Phase Hrs	Start On	Finish On	Cum Hrs	Cum Days	Max Depth
RIG MOVE/RIG-UP(RM)	92.5	08 Oct 2004	12 Oct 2004	92.50	3.854 days	0m
PRESPUD(PS)	25	12 Oct 2004	13 Oct 2004	117.50	4.896 days	158.0m
CONDUCTOR HOLE(CH)	9.5	15 Oct 2004	15 Oct 2004	127.00	5.292 days	192.0m
SURFACE HOLE(SH)	38.75	13 Oct 2004	16 Oct 2004	165.75	6.906 days	787.5m
SURFACE CASING(SC)	55.25	13 Oct 2004	17 Oct 2004	221.00	9.208 days	787.5m
INTERMEDIATE HOLE(IH)	250	17 Oct 2004	28 Oct 2004	471.00	19.625 days	2550.0m
INTERMEDIATE CASING(IC)	14.25	28 Oct 2004	28 Oct 2004	485.25	20.219 days	2550.0m
PRODUCTION HOLE(PH)	75.75	28 Oct 2004	31 Oct 2004	561.00	23.375 days	3003.0m

WBM Data

Mud Type: KCL/PHPA/POLYMER		API FL:	5cm³/30m	Cl:	43000	Solids:	3.7	Viscosity:	50sec/qt
Sample-From:	FL	Filter-Cake:	1/32nd"	K+C*1000:	8%	H2O:	92%	PV:	17cp
Time:	20:00	HTHP-FL:	0cm³/30m	Hard/Ca:	480	Oil:	0%	YP:	18lb/100ft²
Weight:	9.50ppg	HTHP-Cake:	0/32nd"	MBT:	10	Sand:	0.4	Gels 10s:	6
Temp:	120.0C°			PM:	1.2	pH:	10.8	Gels 10m:	9
				PF:	0.2	PHPA:	1ppb	Fann 003:	6
								Fann 006:	7
								Fann 100:	21
								Fann 200:	29
								Fann 300:	35
								Fann 600:	52

Comment: Maintain additions of PHPA and Glydril in the active. Start adding barite to increase weight as per the programe. At 24:00 hrs wt was 10 ppg.

Bit # 6

Wear	I	O1	D	L	B	G	O2	R

Size (''):	8.50in	IADC#	M223	**Nozzles**		**Drilled over last 24 hrs**		**Calculated over Bit Run**	
Mfr:	HYCALOG	WOB(avg)	15000.0klb	No.	Size	Progress	341.0m	Cum. Progress	341.0m
Type:	PDC	RPM(avg)	129	5	15/32nd"	On Bottom Hrs	9.80h	Cum. On Btm Hrs	9.80h
Serial No.:	409737	F.Rate	700gpm			IADC Drill Hrs	12.50h	Cum IADC Drill Hrs	12.50h
Bit Model	RSX104	SPP	3420psi			Total Revs	0	Cum Total Revs	0
Depth In	2662.0m	TFA	0.863			ROP(avg)	34.80 m/hr	ROP(avg)	34.80 m/hr
Depth Out	0m								

Bit # 5

Wear	I	O1	D	L	B	G	O2	R
	3	1	BU	A	X	I	CT::WT	PR

Size (''):	8.50in	IADC#	M422	**Nozzles**		**Drilled over last 24 hrs**		**Calculated over Bit Run**	
Mfr:	HYCALOG	WOB(avg)	12710.0klb	No.	Size	Progress	0m	Cum. Progress	112.0m
Type:	PDC	RPM(avg)	130	2	10/32nd"	On Bottom Hrs	0h	Cum. On Btm Hrs	5.30h
Serial No.:	109886	F.Rate	700gpm	5	14/32nd"	IADC Drill Hrs	0h	Cum IADC Drill Hrs	9.75h
Bit Model	RSX272	SPP	2421psi			Total Revs	0	Cum Total Revs	0
Depth In	2550.0m	TFA	0.905			ROP(avg)	N/A	ROP(avg)	21.13 m/hr
Depth Out	2662.0m								

BHA # 5

Weight(Wet)	60.0klb	Length	295.5m	Torque(max)	0ft-lbs	D.C. (1) Ann Velocity	
Wt Below Jar(Wet)	40.0klb	String	60.0klb	Torque(Off.Btm)	0ft-lbs	D.C. (2) Ann Velocity	
		Pick-Up	60.0klb	Torque(On.Btm)	0ft-lbs	H.W.D.P. Ann Velocity	
		Slack-Off	60.0klb			D.P. Ann Velocity	

Equipment	Length	OD	ID	Serial #	Comment
8.5in Bit	0.25m	8.50in	2.50in	109886	DSX104
8.5in String Stab	1.83m	8.50in	2.25in	XM094	Roller Reamer with ported float
6.75in FEWD Tools	16.10m	8.38in	5.13in	606/V880	
8.5in String Stab	1.94m	8.50in	2.25in	XM088	Roller Reamer
6.5in DC	127.17m	6.50in	2.63in		
6.5in Jars	9.37m	6.50in	2.75in	DAH03584	
6.5in DC	27.23m	6.50in	2.63in		
X/O	0.81m	8.00in	2.69in	X/O12	
5in HWDP	110.77m	5.00in	3.00in		

BHA # 4

Weight(Wet)	60.0klb	Length	295.5m	Torque(max)	0ft-lbs	D.C. (1) Ann Velocity	
Wt Below Jar(Wet)	40.0klb	String	60.0klb	Torque(Off.Btm)	0ft-lbs	D.C. (2) Ann Velocity	
		Pick-Up	60.0klb	Torque(On.Btm)	0ft-lbs	H.W.D.P. Ann Velocity	
		Slack-Off	60.0klb			D.P. Ann Velocity	

Equipment	Length	OD	ID	Serial #	Comment
8.5in Bit	0.25m	8.50in	2.50in	109886	RS2X27
8.5in String Stab	1.83m	8.50in	2.25in	XM094	Roller Reamer with ported float
6.75in FEWD Tools	16.10m	8.38in	5.13in	606/V880	
8.5in String Stab	1.94m	8.50in	2.25in	XM088	Roller Reamer
6.5in DC	127.17m	6.50in	2.63in		
6.5in Jars	9.37m	6.50in	2.75in	DAH03584	
6.5in DC	27.23m	6.50in	2.63in		
X/O	0.81m	8.00in	2.69in	X/O12	
5in HWDP	110.77m	5.00in	3.00in		

Survey

MD (m)	Incl Deg (deg)	Corr. Az (deg)	TVD (m)	'V' Sect (m)	Dogleg (deg/30m)	N/S (m)	E/W (m)	Tool Type
2701.32	1.08	328.22	2701.01	30.44	0.05	30.44	-18.42	MWD
2786.73	0.87	334.96	2786.41	31.71	0.09	31.71	-19.12	MWD
2873.56	0.47	315.46	2873.24	32.56	0.16	32.56	-19.65	MWD
2960.21	0.37	282.26	2959.88	32.87	0.09	32.87	-20.17	MWD

Bulk Stocks

Name	Unit	In	Used	Adjust	Balance
Fuel	MT	0	7	0	949.0
Drill Water	MT	0	40	0	1,116.0
Potable Water	MT	0	25	0	316.0
Gel	MT	0	0	0	158.0
Cement	MT	0	0	0	197.0
Barite	MT	0	33	0	181.0

Personnel On Board

Company	Pax
Santos	5
Transocean	60
Anadrill	2
BHI	6
Dril-Quip	1
Halliburton	2
M.I	2
Weatherford	1
Subsea 7	3
Schlumberger Wireline	1
Santos	3
Total	86

Casing

OD	L.O.T. / F.I.T.	Csg Shoe (MD/TVD)	Cementing
30 "	0ppg / 0ppg	191.0m / 191.0m	
13 3/8"	13.20ppg / 0ppg	778.3m / 778.3m	
9 5/8"	14.72ppg / 0ppg	2537.0m / 2537.0m	

HSE Summary

Events	Date of Last	Days Since	Remarks
Abandon Drill	31 Oct 2004	0 Days	Weekly abandon rig drill.
BOP Test	28 Oct 2004	3 Days	Tested all rams etc to 250 psi low and 5000psi high.
Environmental Incident		0 Days	
Fire Drill	31 Oct 2004	0 Days	Simulated fire in mud process room.
First Aid		0 Days	
Lost Time Incident		0 Days	None
Safety Meeting	17 Oct 2004	14 Days	
Stop Cards	31 Oct 2004	0 Days	7 START Cards submitted

Marine

Weather check on 31 Oct 2004 at 24:00

Visibility	Wind Speed	Wind Dir.	Pressure	Air Temp.	Wave Height	Wave Dir.	Wave Period
10.00nm	15.0kn	290deg	1007bar	15.0C°	0m	000deg	0ft/sec

Roll	Pitch	Heave	Swell Height	Swell Dir.	Swell Period	Weather Comments
0.2deg	0.3deg	1.00m	2.4m	280deg	8.0ft/sec	

Rig Dir.	Ris. Tension	VDL	Comments
216.0deg	0klb	8377.0klb	

Boats	Arrived (date/time)	Departed (date/time)	Status	Bulks		
Lady Astrid			Portland	Item	Unit	Quantity
Lady Caroline			At Rig	Item	Unit	Quantity

Santos

DRILLING MORNING REPORT # 25
CALLISTER 01 (01 Nov 2004)

From : B.Houston / P.King

Well Data

Country	Australia	M. Depth	3400.0m	Cur. Hole Size	8.500in	AFE Cost	
Field	Otway Basin	TVD	3400.0m	Casing OD	9.625in	AFE No.	
Drill Co.	Transocean	Progress	397.0m	Shoe TVD	2538.0m	Daily Cost	
Rig	Jack Bates	Days from spud	19.50	F.I.T. / L.O.T.	0ppg / 14.70ppg	Cum Cost	
Wtr Dpth(LAT)	129.4m	Days on well	24.98			Planned TD	3629.0m
RT-ASL(LAT)	29.0m	Current Op @ 0600	Drilling ahead at 3487m				
RT-ML	158.4m	Planned Op	Drill ahead to TD @ 3629m. POH. Run logs.				

Summary of Period 0000 to 2400 Hrs

Drilled ahead 8-1/2" hole from 3003m to 3400m, weighting up mud system as per schedule.

Operations For Period 0000 Hrs to 2400 Hrs on 01 Nov 2004

Phse	Cls (RC)	Op	From	To	Hrs	Depth	Activity Description
PH	TP (RE)	CMD	0000	0100	1.00	3003.0m	Unable to add barite due to a blockage in bulk flowline.
PH	TP (DFC)	CMD	0100	0315	2.25	3003.0m	Increased the mud weight up from 10.0ppg to 10.3ppg as per weight up schedule.
PH	P	DA	0315	0600	2.75	3053.0m	Drilled 8-1/2" hole from 3003m to 3053m and reamed as required. Surveyed every 3rd stand. Continued to increase mud weight as per schedule. Average Drilling Parameters: WOB: 18,000 lbs; RPM: 127 rpm; Torque: 9,400 ft.lbs; Flow: 698 gpm.
PH	P	SCR	0600	0615	0.25	3053.0m	Flow checked well @ 3053m (Well static). Took SCRs with 10.9 ppg mud.
PH	P	DA	0615	1200	5.75	3168.0m	Continued to drill 8-1/2" hole from 3053m to 3168m, reaming 1/2 stand and monitoring the well on trip tank each connection. Took surveys every third stand. Average Drilling Parameters: WOB: 18,000 lbs; RPM: 130 rpm; Torque: 9,500 ft.lbs; Flow: 700 gpm.
PH	P	DA	1200	1800	6.00	3288.0m	Continued to drill 8-1/2" hole from 3168m to 3288m, reaming 1/2 stand and monitoring the well on trip tank each connection. Took surveys every third stand. Average Drilling Parameters: WOB: 18,000 lbs; RPM: 130 rpm; Torque: 13,000 ft.lbs; Flow: 700 gpm.
PH	P	DA	1800	2400	6.00	3400.0m	Continued to drill 8-1/2" hole from 3288m to 3400m, reaming each stand and monitoring the well on trip tank each connection. Took survey each connection as deviation increased to 1.69 deg @ 3387m. Average Drilling Parameters: WOB: 15,000 lbs; RPM: 130 rpm; Torque: 13,000 ft.lbs; Flow: 700 gpm.

Operations For Period 0000 Hrs to 0600 Hrs on 02 Nov 2004

Phse	Cls (RC)	Op	From	To	Hrs	Depth	Activity Description
PH	P	DA	0000	0530	5.50	3489.0m	Continued to drill 8-1/2" hole from 3400m to 3489m, reaming each stand and monitoring the well on trip tank each connection. Took survey each connection. Average Drilling Parameters: WOB: 10,000 lbs; RPM: 130 rpm; Torque: 13,000 ft.lbs; Flow: 620 gpm.
PH	P	FC	0530	0545	0.25	3489.0m	Circulated due to increase in gas levels (293 units)
PH	P	FC	0545	0600	0.25	3489.0m	Flow checked well (well static)

Phase Data to 2400hrs, 01 Nov 2004

Phase	Phase Hrs	Start On	Finish On	Cum Hrs	Cum Days	Max Depth
RIG MOVE/RIG-UP(RM)	92.5	08 Oct 2004	12 Oct 2004	92.50	3.854 days	0m
PRESPUD(PS)	25	12 Oct 2004	13 Oct 2004	117.50	4.896 days	158.0m
CONDUCTOR HOLE(CH)	9.5	15 Oct 2004	15 Oct 2004	127.00	5.292 days	192.0m
SURFACE HOLE(SH)	38.75	13 Oct 2004	16 Oct 2004	165.75	6.906 days	787.5m
SURFACE CASING(SC)	55.25	13 Oct 2004	17 Oct 2004	221.00	9.208 days	787.5m
INTERMEDIATE HOLE(IH)	250	17 Oct 2004	28 Oct 2004	471.00	19.625 days	2550.0m
INTERMEDIATE CASING(IC)	14.25	28 Oct 2004	28 Oct 2004	485.25	20.219 days	2550.0m
PRODUCTION HOLE(PH)	99.75	28 Oct 2004	01 Nov 2004	585.00	24.375 days	3400.0m

WBM Data

Mud Type:	KCL/PHPA/POLYMER	API FL:	4cm³/30m	Cl:	45000	Solids:	4.5	Viscosity:	58sec/qt
Sample-From:	FL	Filter-Cake:	1/32nd"	K+C*1000:	6.8%	H2O:	84.5%	PV:	19cp
Time:	19:30	HTHP-FL:	0cm³/30m	Hard/Ca:	400	Oil:	0%	YP:	33lb/100ft²
Weight:	11.50ppg	HTHP-Cake:	0/32nd"	MBT:	8	Sand:	0.4	Gels 10s:	9
Temp:	120.0C°			PM:	0	pH:	9.4	Gels 10m:	20
				PF:	0.1	PHPA:	1ppb	Fann 003:	8
								Fann 006:	10
								Fann 100:	30
								Fann 200:	42
								Fann 300:	52
								Fann 600:	71

Comment: Increase mud weight as per programe. Maintain Glycol conc.

Bit # 6

Wear	I	O1	D	L	B	G	O2	R

Size (''):	8.50in	IADC#	M223	**Nozzles**		**Drilled over last 24 hrs**		**Calculated over Bit Run**	
Mfr:	HYCALOG	WOB(avg)	18000.0klb	No.	Size	Progress	397.0m	Cum. Progress	738.0m
Type:	PDC	RPM(avg)	130	5	15/32nd"	On Bottom Hrs	15.30h	Cum. On Btm Hrs	25.10h
Serial No.:	409737	F.Rate	675gpm			IADC Drill Hrs	21.80h	Cum IADC Drill Hrs	34.30h
Bit Model	DSX104	SPP	3947psi			Total Revs	0	Cum Total Revs	0
Depth In	2662.0m	TFA	0.863			ROP(avg)	25.95 m/hr	ROP(avg)	29.40 m/hr
Depth Out	0m								

BHA # 5

Weight(Wet)	60.0klb	Length	295.5m	Torque(max)	0ft-lbs	D.C. (1) Ann Velocity	
Wt Below Jar(Wet)	40.0klb	String	60.0klb	Torque(Off.Btm)	0ft-lbs	D.C. (2) Ann Velocity	
		Pick-Up	60.0klb	Torque(On.Btm)	0ft-lbs	H.W.D.P. Ann Velocity	
		Slack-Off	60.0klb			D.P. Ann Velocity	

Equipment	Length	OD	ID	Serial #	Comment
8.5in Bit	0.25m	8.50in	2.50in	109886	DSX104
8.5in String Stab	1.83m	8.50in	2.25in	XM094	Roller Reamer with ported float
6.75in FEWD Tools	16.10m	8.38in	5.13in	606/V880	
8.5in String Stab	1.94m	8.50in	2.25in	XM088	Roller Reamer
6.5in DC	127.17m	6.50in	2.63in		
6.5in Jars	9.37m	6.50in	2.75in	DAH03584	
6.5in DC	27.23m	6.50in	2.63in		
X/O	0.81m	8.00in	2.69in	X/O12	
5in HWDP	110.77m	5.00in	3.00in		

Survey

MD (m)	Incl Deg (deg)	Corr. Az (deg)	TVD (m)	'V' Sect (m)	Dogleg (deg/30m)	N/S (m)	E/W (m)	Tool Type
3129.38	0.54	224.15	3129.05	32.30	0.06	32.30	-21.31	MWD
3215.10	0.92	224.41	3214.76	31.52	0.14	31.52	-22.08	MWD
3303.12	1.43	212.93	3330.27	29.63	0.13	29.63	-23.49	MWD
3330.00	1.31	213.64	3302.76	30.18	0.15	30.18	-23.13	MWD
3358.35	1.62	214.79	3357.98	29.02	0.22	29.02	-23.90	MWD
3386.78	1.69	213.08	3386.39	28.33	0.09	28.33	-24.36	MWD

Bulk Stocks

Name	Unit	In	Used	Adjust	Balance
Fuel	MT	0	14	0	935.0
Drill Water	MT	0	11	0	1,105.0
Potable Water	MT	20	26	0	310.0
Gel	MT	0	0	0	158.0
Cement	MT	0	0	0	197.0
Barite	MT	0	58	0	123.0

Personnel On Board

Company	Pax
Santos	6
Transocean	63
Anadrill	2
BHI	6
Halliburton	2
M.I	2
Subsea 7	3
Schlumberger Wireline	8
Santos	3
Total	95

Casing

OD	L.O.T. / F.I.T.	Csg Shoe (MD/TVD)	Cementing
30 "	0ppg / 0ppg	191.0m / 191.0m	
13 3/8"	13.20ppg / 0ppg	778.3m / 778.3m	
9 5/8"	14.72ppg / 0ppg	2537.0m / 2537.0m	

HSE Summary

Events	Date of Last	Days Since	Remarks
Abandon Drill	31 Oct 2004	1 Day	Weekly abandon rig drill.
BOP Test	28 Oct 2004	4 Days	Tested all rams etc to 250 psi low and 5000psi high.
Environmental Incident		0 Days	
Fire Drill	31 Oct 2004	1 Day	Simulated fire in mud process room
First Aid		0 Days	
Lost Time Incident		0 Days	None
Safety Meeting	17 Oct 2004	15 Days	
Stop Cards	01 Nov 2004	0 Days	7 START Cards submitted

Marine

Weather check on 01 Nov 2004 at 24:00

Visibility	Wind Speed	Wind Dir.	Pressure	Air Temp.	Wave Height	Wave Dir.	Wave Period
10.00nm	17.0kn	300deg	1004bar	14.5C°	0m	000deg	0ft/sec

Roll	Pitch	Heave	Swell Height	Swell Dir.	Swell Period	Weather Comments
1.0deg	0.5deg	0.30m	2.7m	300deg	8.0ft/sec	

Rig Dir.	Ris. Tension	VDL	Comments
216.0deg	0klb	8380.0klb	

Boats	Arrived (date/time)	Departed (date/time)	Status	Bulks		
Lady Caroline			At Rig	**Item**	**Unit**	**Quantity**
Lady Astrid			ETA Rig 01:00	**Item**	**Unit**	**Quantity**

Helicopter Movement

Flight #	Time	Destination	Comment	Pax
BZU	15:40	Jack Bates		17
BZU	15:58	Essendon		12
BHI	16:01	Jack Bates		4
BHI	16:07	Ocean Patriot		0

Santos

DRILLING MORNING REPORT # 26
CALLISTER 01 (02 Nov 2004)

From : B.Houston / P.King

Well Data

Country	Australia	M. Depth	3631.0m	Cur. Hole Size	8.500in	AFE Cost	
Field	Otway Basin	TVD	3631.0m	Casing OD	9.625in	AFE No.	
Drill Co.	Transocean	Progress	231.0m	Shoe TVD	2538.0m	Daily Cost	
Rig	Jack Bates	Days from spud	20.50	F.I.T. / L.O.T.	0ppg / 14.70ppg	Cum Cost	
Wtr Dpth(LAT)	129.4m	Days on well	25.98			Planned TD	3629.0m
RT-ASL(LAT)	29.0m	Current Op @ 0600	Drilling ahead 8-1/2" hole @ 3658m.				
RT-ML	158.4m	Planned Op	Drill ahead 8-1/2" hole to TD (~3950m)				

Summary of Period 0000 to 2400 Hrs

Drilled 8-1/2" hole from 3400m to 3528m. Increased MW to 12 ppg to reduce gas levels. Drilled ahead to 3631m. Commenced picking up and racking back 11 stands of additional drill pipe for new TD (3950m)

Operations For Period 0000 Hrs to 2400 Hrs on 02 Nov 2004

Phse	Cls (RC)	Op	From	To	Hrs	Depth	Activity Description
PH	P	DA	0000	0530	5.50	3489.0m	Continued to drill 8-1/2" hole from 3400m to 3489m, reaming each stand and monitoring the well on trip tank each connection. Took survey each connection. Average Drilling Parameters: WOB: 10,000 lbs; RPM: 130 rpm; Torque: 13,000 ft.lbs; Flow: 620 gpm.
PH	P	CMD	0530	0545	0.25	3489.0m	Circulated due to increase in gas levels (293 units)
PH	P	FC	0545	0615	0.50	3489.0m	Flow checked well (well static)
PH	P	DA	0615	0700	0.75	3497.0m	Continued to drill 8-1/2" hole from 3489m to 3497m. Average Drilling Parameters: WOB: 10,000 lbs; RPM: 130 rpm; Torque: 13,000 ft.lbs; Flow: 620 gpm.
PH	P	CMD	0700	0715	0.25	3497.0m	Circulated @ 3497m to reduce gas levels (1140 units)
PH	P	DA	0715	0800	0.75	3521.0m	Continued to drill from 3497m to 3521m. Average Drilling Parameters: WOB: 10,000 lbs; RPM: 130 rpm; Torque: 13,000 ft.lbs; Flow: 620 gpm.
PH	P	FC	0800	0830	0.50	3521.0m	Flow checked well. Well static.
PH	P	DA	0830	0930	1.00	3528.0m	Made connection and continued to drill 8-1/2" hole from 3521m to 3528m.
PH	P	CMD	0930	1015	0.75	3528.0m	Circulated @ 3528m (gas level @ 2750 units) Weighted up active system to 12.0 ppg.
PH	P	DA	1015	1200	1.75	3546.0m	Continued to drill 8-1/2" hole from 3528m to 3546m Average Drilling Parameters: WOB: 10,000 lbs; RPM: 130 rpm; Torque: 13,000 ft.lbs; Flow: 620 gpm.
PH	P	DA	1200	1630	4.50	3600.0m	Continued to drill 8-1/2" hole from 3546m to 3600m Average Drilling Parameters: WOB: 10,000 lbs; RPM: 130 rpm; Torque: 13,000 ft.lbs; Flow: 620 gpm.
PH	P	FC	1630	1645	0.25	3600.0m	Flow checked well. Well Static.
PH	P	DA	1645	1800	1.25	3622.0m	Continued to drill 8-1/2" hole from 3600m to 3622m. Average Drilling Parameters: WOB: 15,000 lbs; RPM: 130 rpm; Torque: 14,000 ft.lbs; Flow: 620 gpm.
PH	P	DA	1800	1845	0.75	3631.0m	Continued to drill 8-1/2" hole from 3622m to 3631m, surveying each stand and reaming 1/2 stand prior to connections. Monitored trip tank prior to and during connections. Average Drilling Parameters: WOB: 15,000 lbs; RPM: 130 rpm; Torque: 14,000 ft.lbs; Flow: 620 gpm.
PH	P	CMD	1845	1930	0.75	3631.0m	Circulated bottoms up @ 3631m.
PH	P	FC	1930	1945	0.25	3631.0m	Flow checked well. Well static.
PH	P	WIN	1945	2100	1.25	3631.0m	Pumped out of hole 6 stands to 3463m and racked back in derrick. (11 additional stands of drill pipe required to reach new TD of 3950m)
PH	P	FC	2100	2115	0.25	3631.0m	Flow checked well. Well static.
PH	P	TI	2115	2200	0.75	3631.0m	Picked up and ran in hole 7 joints of 5" drill pipe to 3529m
PH	TP (RE)	RR	2200	2300	1.00	3631.0m	Circulated hole and worked pipe while repairing hydraulic hose on iron roughneck. (Gas levels @ 1200 units)
PH	P	CMD	2300	2315	0.25	3631.0m	Continued to circulate until gas levels reduced to 167 units.
PH	P	TI	2315	2345	0.50	3631.0m	Picked up and ran in hole 8 joints of 5" drill pipe to 3605m.
PH	P	CMD	2345	2400	0.25	3631.0m	Circulated well to ensure that gas levels were stable prior to pumping out of hole to rack back drill pipe.

Operations For Period 0000 Hrs to 0600 Hrs on 03 Nov 2004

Phse	Cls (RC)	Op	From	To	Hrs	Depth	Activity Description
PH	P	CMD	0000	0030	0.50	3631.0m	Continued to circulate to stabilise gas levels.
PH	P	WIN	0030	0130	1.00	3631.0m	Pumped out of hole from 3605m to 3463m.
PH	P	TI	0130	0230	1.00	3631.0m	Picked up and ran in hole 5" drill pipe to 3630m

Phse	Cls (RC)	Op	From	To	Hrs	Depth	Activity Description
PH	P	WIN	0230	0245	0.25	3631.0m	Washed down one stand to bottom
PH	P	DA	0245	0600	3.25	3658.0m	Drilled ahead 8-1/2" hole from 3631m to 3658m, weighting up mud to 12.2 ppg. Gas level peaked at 5500 units on bottoms up then reduced to 150 units background.

Phase Data to 2400hrs, 02 Nov 2004

Phase	Phase Hrs	Start On	Finish On	Cum Hrs	Cum Days	Max Depth
RIG MOVE/RIG-UP(RM)	92.5	08 Oct 2004	12 Oct 2004	92.50	3.854 days	0m
PRESPUD(PS)	25	12 Oct 2004	13 Oct 2004	117.50	4.896 days	158.0m
CONDUCTOR HOLE(CH)	9.5	15 Oct 2004	15 Oct 2004	127.00	5.292 days	192.0m
SURFACE HOLE(SH)	38.75	13 Oct 2004	16 Oct 2004	165.75	6.906 days	787.5m
SURFACE CASING(SC)	55.25	13 Oct 2004	17 Oct 2004	221.00	9.208 days	787.5m
INTERMEDIATE HOLE(IH)	250	17 Oct 2004	28 Oct 2004	471.00	19.625 days	2550.0m
INTERMEDIATE CASING(IC)	14.25	28 Oct 2004	28 Oct 2004	485.25	20.219 days	2550.0m
PRODUCTION HOLE(PH)	123.75	28 Oct 2004	02 Nov 2004	609.00	25.375 days	3631.0m

WBM Data

Mud Type:	KCL/PHPA/POLYMER	API FL:	5cm³/30m	Cl:	52000	Solids:	4.7	Viscosity:	55sec/qt
Sample-From:	FL	Filter-Cake:	1/32nd"	K+C*1000:	9.8%	H2O:	82.5%	PV:	22cp
Time:	22:00	HTHP-FL:	0cm³/30m	Hard/Ca:	480	Oil:	0%	YP:	30lb/100ft²
Weight:	12.00ppg	HTHP-Cake:	0/32nd"	MBT:	10	Sand:	0.4	Gels 10s:	9
Temp:	120.0C°			PM:	0	pH:	8.7	Gels 10m:	25
				PF:	0	PHPA:	1ppb	Fann 003:	8
								Fann 006:	10
								Fann 100:	30
								Fann 200:	42
								Fann 300:	52
								Fann 600:	74

Comment: Circulate gas, and increase mud weight.Add KCL and glydril to maintain concs.

Bit # 6

Wear	I	O1	D	L	B	G	O2	R

				Nozzles		Drilled over last 24 hrs		Calculated over Bit Run	
Size (''):	8.50in	IADC#	M223	No.	Size	Progress	231.0m	Cum. Progress	969.0m
Mfr:	HYCALOG	WOB(avg)	16000.0klb	5	15/32nd"	On Bottom Hrs	13.20h	Cum. On Btm Hrs	38.30h
Type:	PDC	RPM(avg)	122			IADC Drill Hrs	19.20h	Cum IADC Drill Hrs	53.50h
Serial No.:	109737	F.Rate	620gpm			Total Revs	0	Cum Total Revs	0
Bit Model	DSX104HG	SPP	3900psi			ROP(avg)	17.50 m/hr	ROP(avg)	25.30 m/hr
Depth In	2662.0m	TFA	0.863						
Depth Out	0m								

BHA # 5

Weight(Wet)	60.0klb	Length	295.5m	Torque(max)	0ft-lbs	D.C. (1) Ann Velocity
Wt Below Jar(Wet)	40.0klb	String	60.0klb	Torque(Off.Btm)	0ft-lbs	D.C. (2) Ann Velocity
		Pick-Up	60.0klb	Torque(On.Btm)	0ft-lbs	H.W.D.P. Ann Velocity
		Slack-Off	60.0klb			D.P. Ann Velocity

Equipment	Length	OD	ID	Serial #	Comment
8.5in Bit	0.25m	8.50in	2.50in	109737	DSX104HG
8.5in String Stab	1.83m	8.50in	2.25in	XM094	Roller Reamer with ported float
6.75in FEWD Tools	16.10m	8.38in	5.13in	606/V880	
8.5in String Stab	1.94m	8.50in	2.25in	XM088	Roller Reamer
6.5in DC	127.17m	6.50in	2.63in		
6.5in Jars	9.37m	6.50in	2.75in	DAH03584	
6.5in DC	27.23m	6.50in	2.63in		
X/O	0.81m	8.00in	2.69in	X/O12	
5in HWDP	110.77m	5.00in	3.00in		

Survey

MD (m)	Incl Deg (deg)	Corr. Az (deg)	TVD (m)	'V' Sect (m)	Dogleg (deg/30m)	N/S (m)	E/W (m)	Tool Type
3414.60	1.67	214.65	3414.20	27.66	0.05	27.66	-24.81	MWD
3473.12	2.20	213.29	3472.69	26.02	0.28	26.02	-25.92	MWD
3528.68	2.23	216.78	3528.21	24.26	0.08	24.26	-27.15	MWD
3557.20	2.26	215.08	3556.71	23.36	0.08	23.36	-27.80	MWD
3586.67	2.18	216.17	3586.15	22.43	0.09	22.43	-28.47	MWD
3614.64	1.49	198.26	3614.11	27.97	0.97	27.97	-28.90	MWD

Bulk Stocks

Name	Unit	In	Used	Adjust	Balance
Fuel	MT	0	12	0	923.0
Drill Water	MT	0	21	0	1,084.0
Potable Water	MT	0	42	0	268.0
Gel	MT	0	0	0	158.0
Cement	MT	0	0	0	197.0
Barite	MT	0	39	0	84.0

Personnel On Board

Company	Pax
Santos	6
Transocean	63
Anadrill	2
BHI	6
Halliburton	2
M.I	2
Subsea 7	3
Schlumberger Wireline	8
Santos	3
Total	95

Casing

OD	L.O.T. / F.I.T.	Csg Shoe (MD/TVD)	Cementing
30 "	0ppg / 0ppg	191.0m / 191.0m	
13 3/8"	13.20ppg / 0ppg	778.3m / 778.3m	
9 5/8"	14.72ppg / 0ppg	2537.0m / 2537.0m	

HSE Summary

Events	Date of Last	Days Since	Remarks
Abandon Drill	31 Oct 2004	2 Days	Weekly abandon rig drill.
BOP Test	28 Oct 2004	5 Days	Tested all rams etc to 250 psi low and 5000psi high.
Environmental Incident		0 Days	
Fire Drill	31 Oct 2004	2 Days	Simulated fire in mud process room
First Aid		0 Days	
Lost Time Incident		0 Days	None
Safety Meeting	17 Oct 2004	16 Days	
Stop Cards	01 Nov 2004	1 Day	7 START Cards submitted

Marine

Weather check on 02 Nov 2004 at 24:00

Visibility	Wind Speed	Wind Dir.	Pressure	Air Temp.	Wave Height	Wave Dir.	Wave Period
10.00nm	22.0kn	220deg	1011bar	11.4C°	0m	000deg	0ft/sec

Roll	Pitch	Heave	Swell Height	Swell Dir.	Swell Period	Weather Comments
1.0deg	1.0deg	0.60m	3.0m	225deg	10.0ft/sec	

Rig Dir.	Ris. Tension	VDL	Comments
216.0deg	0klb	8256.0klb	

Boats	Arrived (date/time)	Departed (date/time)	Status	Bulks		
Lady Astrid			At rig	**Item**	**Unit**	**Quantity**
Lady Caroline			In Portland	**Item**	**Unit**	**Quantity**

Santos

DRILLING MORNING REPORT # 27
CALLISTER 01 (03 Nov 2004)

From : B.Houston / P.King

Well Data

Country	Australia	M. Depth	3833.0m	Cur. Hole Size	8.500in	AFE Cost	
Field	Otway Basin	TVD	3833.0m	Casing OD	9.625in	AFE No.	
Drill Co.	Transocean	Progress	203.0m	Shoe TVD	2538.0m	Daily Cost	
Rig	Jack Bates	Days from spud	21.50	F.I.T. / L.O.T.	0ppg / 14.70ppg	Cum Cost	
Wtr Dpth(LAT)	129.4m	Days on well	26.98			Planned TD	3629.0m
RT-ASL(LAT)	29.0m	Current Op @ 0600	Drilling ahead 8-1/2" hole at 3892m.				
RT-ML	158.4m	Planned Op	Drill ahead to TD @ 3950m. Circulate hole clean. Wiper trip to 9-5/8" shoe. Ensure well stable before POH to run logs.				

Summary of Period 0000 to 2400 Hrs

Drilled 8-1/2" hole from 3605m to 3833m, increasing mud weight and flow checking as required.

Operations For Period 0000 Hrs to 2400 Hrs on 03 Nov 2004

Phse	Cls (RC)	Op	From	To	Hrs	Depth	Activity Description
PH	P	CMD	0000	0030	0.50	3631.0m	Continued to circulate to stabilise gas levels.
PH	P	WIN	0030	0130	1.00	3631.0m	Pumped out of hole from 3605m to 3463m.
PH	P	TI	0130	0230	1.00	3631.0m	Picked up and ran in hole 5" drill pipe to 3630m
PH	P	WIN	0230	0245	0.25	3631.0m	Washed down one stand to bottom
PH	P	DA	0245	0600	3.25	3658.0m	Drilled ahead 8-1/2" hole from 3631m to 3658m, weighting up mud to 12.2 ppg. Gas level peaked at 5500 units on bottoms up then reduced to 150 units background.
PH	P	DA	0600	1200	6.00	3724.0m	Continued to drill 8-1/2" hole from 3658m to 3724m, reaming each stand prior to connection and monitoring trip tank prior to and during each connection. Connection gas 545 units @ 3687m. Mud weighted up to 12.3 ppg. Connection gas 665 units @ 3715m. Mud weighted up to 12.5 ppg.
PH	P	DA	1200	1445	2.75	3744.0m	Continued to drill 8-1/2" hole from 3724m to 3744m, reaming each stand prior to connection and monitoring trip tank prior to and during each connection.
PH	P	FC	1445	1500	0.25	3744.0m	Flow checked. Well static.
PH	P	CS	1500	1530	0.50	3744.0m	Circulated bottoms up to check gas levels. Connection gas 420 units @ 3742m. Mud weighted up to 12.7 ppg.
PH	P	DA	1530	1800	2.50	3771.0m	Continued to drill 8-1/2" hole from 3744m to 3771m, reaming each stand prior to connection and monitoring trip tank prior to and during each connection. Connection gas 370 units @ 3771m. Mud weighted up to 12.8 ppg.
PH	P	DA	1800	2400	6.00	3833.0m	Continued to drill 8-1/2" hole from 3771m to 3833m, reaming each stand prior to connection and monitoring trip tank prior to and during each connection. Connection gas 400 units @ 3802m. Mud weighted up to 12.9 ppg. Connection gas 365 units @ 3830m.

Operations For Period 0000 Hrs to 0600 Hrs on 04 Nov 2004

Phse	Cls (RC)	Op	From	To	Hrs	Depth	Activity Description
PH	P	DA	0000	0600	6.00	3892.0m	Continued to drill 8-1/2" hole from 3833m to 3892m, reaming each stand prior to connection and monitoring trip tank prior to and during each connection. Connection gas 661 units @ 3858m. Mud weighted up to 13.0 ppg. Connection gas 560 units @ 3887m.

Phase Data to 2400hrs, 03 Nov 2004

Phase	Phase Hrs	Start On	Finish On	Cum Hrs	Cum Days	Max Depth
RIG MOVE/RIG-UP(RM)	92.5	08 Oct 2004	12 Oct 2004	92.50	3.854 days	0m
PRESPUD(PS)	25	12 Oct 2004	13 Oct 2004	117.50	4.896 days	158.0m
CONDUCTOR HOLE(CH)	9.5	15 Oct 2004	15 Oct 2004	127.00	5.292 days	192.0m
SURFACE HOLE(SH)	38.75	13 Oct 2004	16 Oct 2004	165.75	6.906 days	787.5m
SURFACE CASING(SC)	55.25	13 Oct 2004	17 Oct 2004	221.00	9.208 days	787.5m
INTERMEDIATE HOLE(IH)	250	17 Oct 2004	28 Oct 2004	471.00	19.625 days	2550.0m
INTERMEDIATE CASING(IC)	14.25	28 Oct 2004	28 Oct 2004	485.25	20.219 days	2550.0m
PRODUCTION HOLE(PH)	147.75	28 Oct 2004	03 Nov 2004	633.00	26.375 days	3833.0m

WBM Data

Mud Type: KCL/PHPA/POLYMER		API FL:	6cm³/30m	Cl:	51000	Solids:	3.9	Viscosity:	55sec/qt
Sample-From:	FL	Filter-Cake:	1/32nd"	K+C*1000:	8%	H2O:	79.5%	PV:	23cp
Time:	20:00	HTHP-FL:	0cm³/30m	Hard/Ca:	460	Oil:	0%	YP:	32lb/100ft²
Weight:	12.80ppg	HTHP-Cake:	0/32nd"	MBT:	12	Sand:	0.4	Gels 10s:	9
Temp:	120.0C°			PM:	0	pH:	8.9	Gels 10m:	29
				PF:	0	PHPA:	1ppb	Fann 003:	9
								Fann 006:	11
								Fann 100:	31
								Fann 200:	43
								Fann 300:	55
								Fann 600:	78

Comment: Circulate gas, and increase mud weight.Cont. to weigh up active system to 12.9 ppg.

Bit # 6

Wear	I	O1	D	L	B	G	O2	R

Size (''):	8.50in	IADC#	M223	**Nozzles**		**Drilled over last 24 hrs**	**Calculated over Bit Run**
Mfr:	HYCALOG	WOB(avg)	12000.0klb	No.	Size	Progress 203.0m	Cum. Progress 1172.0m
Type:	PDC	RPM(avg)	126	5	15/32nd"	On Bottom Hrs 13.20h	Cum. On Btm Hrs 51.50h
Serial No.:	109737	F.Rate	600gpm			IADC Drill Hrs 20.10h	Cum IADC Drill Hrs 73.60h
Bit Model	DSX104HG	SPP	3900psi			Total Revs 0	Cum Total Revs 0
Depth In	2662.0m	TFA	0.863			ROP(avg) 15.38 m/hr	ROP(avg) 22.76 m/hr
Depth Out	0m						

BHA # 5

Weight(Wet)	60.0klb	Length	295.5m	Torque(max)	0ft-lbs	D.C. (1) Ann Velocity	
Wt Below Jar(Wet)	40.0klb	String	60.0klb	Torque(Off.Btm)	0ft-lbs	D.C. (2) Ann Velocity	
		Pick-Up	60.0klb	Torque(On.Btm)	0ft-lbs	H.W.D.P. Ann Velocity	
		Slack-Off	60.0klb			D.P. Ann Velocity	

Equipment	Length	OD	ID	Serial #	Comment
8.5in Bit	0.25m	8.50in	2.50in	109737	DSX104HG
8.5in String Stab	1.83m	8.50in	2.25in	XM094	Roller Reamer with ported float
6.75in FEWD Tools	16.10m	8.38in	5.13in	606/V880	
8.5in String Stab	1.94m	8.50in	2.25in	XM088	Roller Reamer
6.5in DC	127.17m	6.50in	2.63in		
6.5in Jars	9.37m	6.50in	2.75in	DAH03584	
6.5in DC	27.23m	6.50in	2.63in		
X/O	0.81m	8.00in	2.69in	X/O12	
5in HWDP	110.77m	5.00in	3.00in		

Survey

MD (m)	Incl Deg (deg)	Corr. Az (deg)	TVD (m)	'V' Sect (m)	Dogleg (deg/30m)	N/S (m)	E/W (m)	Tool Type
3473.12	2.20	213.29	3472.69	26.02	0.28	26.02	-25.92	MWD
3528.68	2.23	216.78	3528.21	24.26	0.08	24.26	-27.15	MWD
3557.20	2.26	215.08	3556.71	23.36	0.08	23.36	-27.80	MWD
3586.67	2.18	216.17	3586.15	22.43	0.09	22.43	-28.47	MWD
3700.75	2.17	212.69	3700.15	18.86	0.04	18.86	-30.92	MWD
3787.16	2.50	209.01	3786.49	15.83	0.13	15.83	-32.71	MWD

Bulk Stocks

Name	Unit	In	Used	Adjust	Balance
Fuel	MT	0	23	0	900.0
Drill Water	MT	0	26	0	1,058.0
Potable Water	MT	0	32	0	236.0
Gel	MT	0	0	0	158.0
Cement	MT	0	0	0	197.0
Barite	MT	41	41	0	84.0

Personnel On Board

Company	Pax
Santos	7
Transocean	65
Anadrill	2
BHI	6
Halliburton	2
M.I	2
Subsea 7	3
Schlumberger Wireline	8
Santos	3
Total	98

Casing

OD	L.O.T. / F.I.T.	Csg Shoe (MD/TVD)	Cementing
30 "	0ppg / 0ppg	191.0m / 191.0m	
13 3/8"	13.20ppg / 0ppg	778.3m / 778.3m	
9 5/8"	14.72ppg / 0ppg	2537.0m / 2537.0m	

HSE Summary

Events	Date of Last	Days Since	Remarks
Abandon Drill	31 Oct 2004	3 Days	Weekly abandon rig drill.
BOP Test	28 Oct 2004	6 Days	Tested all rams etc to 250 psi low and 5000psi high.
Environmental Incident		0 Days	
Fire Drill	31 Oct 2004	3 Days	Simulated fire in mud process room
First Aid		0 Days	
Lost Time Incident		0 Days	None
Safety Meeting	17 Oct 2004	17 Days	
Stop Cards	01 Nov 2004	2 Days	7 START Cards submitted

Marine

Weather check on 03 Nov 2004 at 24:00

Visibility	Wind Speed	Wind Dir.	Pressure	Air Temp.	Wave Height	Wave Dir.	Wave Period
10.00nm	4.0kn	135deg	1011bar	13.0C°	0m	000deg	0ft/sec

Roll	Pitch	Heave	Swell Height	Swell Dir.	Swell Period	Weather Comments
0.5deg	0.5deg	0.30m	2.4m	340deg	10.0ft/sec	

Rig Dir.	Ris. Tension	VDL	Comments
216.0deg	0klb	8585.0klb	

Boats	Arrived (date/time)	Departed (date/time)	Status	Bulks		
Lady Caroline	20:00 03/11/04		Jack Bates	**Item**	**Unit**	**Quantity**
Lady Astrid		23:30 03/11/04	On route to Portland	**Item**	**Unit**	**Quantity**

Helicopter Movement

Flight #	Time	Destination	Comment	Pax
BZU	16:48	Jack Bates		9
BZU	16:55	Essendon		6

Santos

DRILLING MORNING REPORT # 28
CALLISTER 01 (04 Nov 2004)

From : B.Houston / P.King

Well Data

Country	Australia	M. Depth	3914.5m	Cur. Hole Size	8.500in	AFE Cost	
Field	Otway Basin	TVD	3914.5m	Casing OD	9.625in	AFE No.	
Drill Co.	Transocean	Progress	81.5m	Shoe TVD	2538.0m	Daily Cost	
Rig	Jack Bates	Days from spud	22.50	F.I.T. / L.O.T.	0ppg / 14.70ppg	Cum Cost	
Wtr Dpth(LAT)	129.4m	Days on well	27.98			Planned TD	3629.0m
RT-ASL(LAT)	29.0m	Current Op @ 0600	Tripping out of hole @ 1809m.				
RT-ML	158.4m	Planned Op	Continue to trip out of hole to log. Lay out MWD/LWD tools. Rig up Schlumberger and commence logging.				

Summary of Period 0000 to 2400 Hrs

Drilled ahead 8-1/2" hole to 3914.5m (TD). Weighted up in stages from 13.0 ppg to 14.1 ppg to reduce gas levels.

Operations For Period 0000 Hrs to 2400 Hrs on 04 Nov 2004

Phse	Cls (RC)	Op	From	To	Hrs	Depth	Activity Description
PH	P	DA	0000	0600	6.00	3892.0m	Continued to drill 8-1/2" hole from 3833m to 3892m, reaming each stand prior to connection and monitoring trip tank prior to and during each connection. Connection gas 661 units @ 3858m. Mud weighted up to 13.0 ppg. Connection gas 560 units @ 3887m.
PH	P	DA	0600	0900	3.00	3914.5m	Continued to drill 8-1/2" hole from 3892m to 3914.5m (Logging TD), reaming each stand prior to connection and monitoring trip tank prior to and during each connection.
PH	P	FC	0900	0915	0.25	3914.5m	Performed static inflow test (Work pipe 5 times with pumps shut off to simulate tripping)
PH	P	CMD	0915	1200	2.75	3914.5m	Circulated bottoms up. Gas peaked at 582 units. Continued to circulate whilst weighting up mud to 13.2 ppg.
PH	P	FC	1200	1230	0.50	3914.5m	Performed static inflow test.
PH	P	CMD	1230	1600	3.50	3914.5m	Circulated bottoms up. Gas peaked at 755 units. Continued to circulate whilst weighting up mud to 13.6 ppg.
PH	P	FC	1600	1630	0.50	3914.5m	Performed static inflow test.
PH	P	CMD	1630	1800	1.50	3914.5m	Circulated bottoms up. Gas peaked at 279 units. Continued to circulate whilst weighting up mud to 13.9 ppg.
PH	P	CMD	1800	1930	1.50	3914.5m	Continued to circulate and weight up mud to 13.9 ppg.
PH	P	FC	1930	1945	0.25	3914.5m	Flow checked. Well static.
EP	P	TO	1945	2100	1.25	3914.5m	Pulled out of hole from 3914.5m to 3634m. Approx. 2.2 bbls gain on trip tank.
EP	P	TI	2100	2300	2.00	3914.5m	Ran back to bottom and circulated bottoms up. 300 units of gas.
EP	P	CMD	2300	2400	1.00	3914.5m	Continued to circulate whilst weighting up mud to 14.1 ppg.

Operations For Period 0000 Hrs to 0600 Hrs on 05 Nov 2004

Phse	Cls (RC)	Op	From	To	Hrs	Depth	Activity Description
PH	P	CMD	0000	0100	1.00	3914.5m	Continued to circulate and condition mud to 14.1 ppg.
EP	P	TO	0100	0415	3.25	3914.5m	Pulled out of hole from 3910m to 2522m. (Hole condition good, no drag, trip tank volumes OK)
EP	P	FC	0415	0430	0.25	3914.5m	Flow checked inside 9-5/8" casing shoe (shoe @ 2538m). Well static. Serviced top drive whilst flow checking.
EP	P	TO	0430	0600	1.50	3914.5m	Continued to pull out of hole from 2522m to 1809m (Hole condition good, no drag, trip tank volumes OK)

Phase Data to 2400hrs, 04 Nov 2004

Phase	Phase Hrs	Start On	Finish On	Cum Hrs	Cum Days	Max Depth
RIG MOVE/RIG-UP(RM)	92.5	08 Oct 2004	12 Oct 2004	92.50	3.854 days	0m
PRESPUD(PS)	25	12 Oct 2004	13 Oct 2004	117.50	4.896 days	158.0m
CONDUCTOR HOLE(CH)	9.5	15 Oct 2004	15 Oct 2004	127.00	5.292 days	192.0m
SURFACE HOLE(SH)	38.75	13 Oct 2004	16 Oct 2004	165.75	6.906 days	787.5m
SURFACE CASING(SC)	55.25	13 Oct 2004	17 Oct 2004	221.00	9.208 days	787.5m
INTERMEDIATE HOLE(IH)	250	17 Oct 2004	28 Oct 2004	471.00	19.625 days	2550.0m
INTERMEDIATE CASING(IC)	14.25	28 Oct 2004	28 Oct 2004	485.25	20.219 days	2550.0m
PRODUCTION HOLE(PH)	167.5	28 Oct 2004	04 Nov 2004	652.75	27.198 days	3914.5m
EVALUATION PRODUCTION HOLE(EP)	4.25	04 Nov 2004	04 Nov 2004	657.00	27.375 days	3914.5m

WBM Data

Mud Type: KCL/PHPA/POLYMER		API FL:	5cm³/30m	Cl:	51000	Solids:	4.4	Viscosity:	57sec/qt
Sample-From:	FL	Filter-Cake:	1/32nd"	K+C*1000:	9%	H2O:	76.5%	PV:	58cp
Time:	21:00	HTHP-FL:	0cm³/30m	Hard/Ca:	400	Oil:	0%	YP:	36lb/100ft²
Weight:	14.10ppg	HTHP-Cake:	0/32nd"	MBT:	10	Sand:	0.2	Gels 10s:	10
Temp:	120.0C°			PM:	0.4	pH:	9.4	Gels 10m:	30
				PF:	0.1	PHPA:	1ppb	Fann 003:	9
								Fann 006:	13
								Fann 100:	48
								Fann 200:	72
								Fann 300:	94
								Fann 600:	152

Comment: Condition mud for increasing gels and FL. Bleed in whole mud. Increase mud weight to 14.1 ppg.Add Biocide and o2 scav prior to POOH for logs.

Bit # 6

Wear	I	O1	D	L	B	G	O2	R

Size (''):	8.50in	IADC#	M223	**Nozzles**		**Drilled over last 24 hrs**		**Calculated over Bit Run**	
Mfr:	HYCALOG	WOB(avg)	14000.0klb	No.	Size	Progress	81.5m	Cum. Progress	1253.5m
Type:	PDC	RPM(avg)	128	5	15/32nd"	On Bottom Hrs	6.60h	Cum. On Btm Hrs	58.10h
Serial No.:	109737	F.Rate	600gpm			IADC Drill Hrs	16.30h	Cum IADC Drill Hrs	89.90h
Bit Model	DSX104HG	SPP	3707psi			Total Revs	0	Cum Total Revs	0
Depth In	2662.0m	TFA	0.863			ROP(avg)	12.35 m/hr	ROP(avg)	21.57 m/hr
Depth Out	0m								

BHA # 5

Weight(Wet)	60.0klb	Length	295.5m	Torque(max)	0ft-lbs	D.C. (1) Ann Velocity	
Wt Below Jar(Wet)	40.0klb	String	60.0klb	Torque(Off.Btm)	0ft-lbs	D.C. (2) Ann Velocity	
		Pick-Up	60.0klb	Torque(On.Btm)	0ft-lbs	H.W.D.P. Ann Velocity	
		Slack-Off	60.0klb			D.P. Ann Velocity	

Equipment	Length	OD	ID	Serial #	Comment
8.5in Bit	0.25m	8.50in	2.50in	109737	DSX104HG
8.5in String Stab	1.83m	8.50in	2.25in	XM094	Roller Reamer with ported float
6.75in FEWD Tools	16.10m	8.38in	5.13in	606/V880	
8.5in String Stab	1.94m	8.50in	2.25in	XM088	Roller Reamer
6.5in DC	127.17m	6.50in	2.63in		
6.5in Jars	9.37m	6.50in	2.75in	DAH03584	
6.5in DC	27.23m	6.50in	2.63in		
X/O	0.81m	8.00in	2.69in	X/O12	
5in HWDP	110.77m	5.00in	3.00in		

Survey

MD (m)	Incl Deg (deg)	Corr. Az (deg)	TVD (m)	'V' Sect (m)	Dogleg (deg/30m)	N/S (m)	E/W (m)	Tool Type
3557.20	2.26	215.08	3556.71	23.36	0.08	23.36	-27.80	MWD
3586.67	2.18	216.17	3586.15	22.43	0.09	22.43	-28.47	MWD
3700.75	2.17	212.69	3700.15	18.86	0.04	18.86	-30.92	MWD
3787.16	2.50	209.01	3786.49	15.83	0.13	15.83	-32.71	MWD
3898.83	2.70	196.27	3898.05	11.18	0.17	11.18	-34.63	MWD
3914.50	2.70	196.27	3913.70	10.47	0	10.47	-34.84	Projected to TD

Bulk Stocks

Name	Unit	In	Used	Adjust	Balance
Fuel	MT	0	15	0	885.0
Drill Water	MT	0	10	0	1,048.0
Potable Water	MT	0	39	0	197.0
Gel	MT	0	0	0	158.0
Cement	MT	0	0	0	197.0
Barite	MT	82	105	0	61.0

Personnel On Board

Company	Pax
Santos	7
Transocean	65
Anadrill	2
BHI	6
Halliburton	2
M.I	2
Subsea 7	3
Schlumberger Wireline	8
Santos	3
Total	98

Casing

OD	L.O.T. / F.I.T.	Csg Shoe (MD/TVD)	Cementing
30 "	0ppg / 0ppg	191.0m / 191.0m	
13 3/8"	13.20ppg / 0ppg	778.3m / 778.3m	
9 5/8"	14.72ppg / 0ppg	2537.0m / 2537.0m	

HSE Summary

Events	Date of Last	Days Since	Remarks
Abandon Drill	31 Oct 2004	4 Days	Weekly abandon rig drill.
BOP Test	28 Oct 2004	7 Days	Tested all rams etc to 250 psi low and 5000psi high.
Environmental Incident		0 Days	
Fire Drill	31 Oct 2004	4 Days	Simulated fire in mud process room
First Aid		0 Days	
Lost Time Incident		0 Days	None
Safety Meeting	17 Oct 2004	18 Days	
Stop Cards	01 Nov 2004	3 Days	7 START Cards submitted

Marine

Weather check on 04 Nov 2004 at 24:00

Visibility	Wind Speed	Wind Dir.	Pressure	Air Temp.	Wave Height	Wave Dir.	Wave Period
10.00nm	22.0kn	070deg	1000bar	12.3C°	0m	000deg	0ft/sec

Roll	Pitch	Heave	Swell Height	Swell Dir.	Swell Period	Weather Comments
0.4deg	0.5deg	0.30m	2.4m	070deg	10.0ft/sec	

Rig Dir.	Ris. Tension	VDL	Comments
216.0deg	0klb	8973.0klb	

Boats	Arrived (date/time)	Departed (date/time)	Status	Bulks		
Lady Astrid	02:00 05/11/04		Jack Bates	**Item**	**Unit**	**Quantity**
Lady Caroline	20:00 03/11/04		Jack Bates	**Item**	**Unit**	**Quantity**

Santos

DRILLING MORNING REPORT # 29
CALLISTER 01 (05 Nov 2004)

From : B.Houston / P.King

Well Data

Country	Australia	M. Depth	3914.5m	Cur. Hole Size	8.500in	AFE Cost	
Field	Otway Basin	TVD	3914.5m	Casing OD	9.625in	AFE No.	
Drill Co.	Transocean	Progress	0m	Shoe TVD	2538.0m	Daily Cost	
Rig	Jack Bates	Days from spud	23.50	F.I.T. / L.O.T.	0ppg / 14.70ppg	Cum Cost	
Wtr Dpth(LAT)	129.4m	Days on well	28.98			Planned TD	3629.0m
RT-ASL(LAT)	29.0m	Current Op @ 0600	Running in hole with wiper trip assembly @ 480m..				
RT-ML	158.4m	Planned Op	Continue to RIH for wiper trip. POH. Rig up Schlumberger and run MDT.				

Summary of Period 0000 to 2400 Hrs

Increased MW to 14.1 ppg, POH to log. Rigged up Schlumberger and ran Triple Combo. Commenced pulling out of hole for wiper trip.

Operations For Period 0000 Hrs to 2400 Hrs on 05 Nov 2004

Phse	Cls (RC)	Op	From	To	Hrs	Depth	Activity Description
PH	P	CMD	0000	0100	1.00	3914.5m	Continued to circulate and condition mud to 14.1 ppg.
EP	P	TO	0100	0415	3.25	3914.5m	Pulled out of hole from 3910m to 2522m. (Hole condition good, no drag, trip tank volumes OK)
EP	P	FC	0415	0430	0.25	3914.5m	Flow checked inside 9-5/8" casing shoe (shoe @ 2538m). Well static. Serviced top drive whilst flow checking.
EP	P	TO	0430	0600	1.50	3914.5m	Continued to pull out of hole from 2522m to 1809m (Hole condition good, no drag, trip tank volumes OK)
EP	P	TO	0600	0615	0.25	3914.5m	Continued to pull out of hole from 1809m to 1638m (Hole condition good, no drag, trip tank volumes OK)
EP	P	TO	0615	0630	0.25	3914.5m	Pumped slug (pipe pulling wet)
EP	P	TO	0630	0815	1.75	3914.5m	Continued to pull out of hole from 1809m to 1638m (Hole condition good, no drag, trip tank volumes OK)
EP	P	FC	0815	0830	0.25	3914.5m	Flow checked well @ BOPs. Well static.
EP	P	TO	0830	0845	0.25	3914.5m	Continued to pull out of hole 467m to 295m.
EP	P	TO	0845	0900	0.25	3914.5m	Pulled out of hole with HWDP from 295m to 183m.
EP	P	SM	0900	0915	0.25	3914.5m	Held toolbox meeting prior to handling drill collars.
EP	P	HBHA	0915	1015	1.00	3914.5m	Continued to pull out of hole BHA from 183m to 20m.
EP	P	HBHA	1015	1115	1.00	3914.5m	Layed out Anadrill LWD/MWD tools.
EP	P	CRF	1115	1130	0.25	3914.5m	Cleared rig floor of excess equipment.
EP	P	LOG	1130	1200	0.50	3914.5m	Held toolbox meeting and rig up for wireline operations.
EP	P	LOG	1200	1215	0.25	3914.5m	Continued to rig up wireline equipment
EP	P	LOG	1215	1415	2.00	3914.5m	Held toolbox meeting and made up wireline toolstring.
EP	P	LOG	1415	1445	0.50	3914.5m	Loaded radioactive sources in Schlumberger tools and RIH to 72m.
EP	TP (VE)	LOG	1445	1500	0.25	3914.5m	Removed radioactive sources from Schlumberger tools (HNGS Tool Failure)
EP	TP (VE)	LOG	1500	1515	0.25	3914.5m	Changed out and replaced HNGS tool.
EP	P	LOG	1515	1930	4.25	3914.5m	Ran in hole Log #1 Triple Combo (CNT-LDT-DSI-DLT-MSFL-GR-HNGS) to 3917m.
EP	P	LOG	1930	2245	3.25	3914.5m	Logged 3917m to 2475m. Retracted caliper due to tight hole (Max 8,400 lbs overpull through 3150m to 2700m)
EP	P	LOG	2245	2400	1.25	3914.5m	Commenced pulling out of hole with Triple Combo suite.

Operations For Period 0000 Hrs to 0600 Hrs on 06 Nov 2004

Phse	Cls (RC)	Op	From	To	Hrs	Depth	Activity Description
EP	P	LOG	0000	0015	0.25	3914.5m	Continued pulling out of hole with Triple Combo.
EP	P	LOG	0015	0030	0.25	3914.5m	Removed radioactive sources from logging tools at surface
EP	P	LOG	0030	0230	2.00	3914.5m	Continued to lay out logging tools
EP	P	LOG	0230	0300	0.50	3914.5m	Rigged down Schlumberger wireline equipment.
EP	P	SM	0300	0315	0.25	3914.5m	Held toolbox meeting prior to running in hole with 8-1/2" wiper trip assembly.
EP	P	TI	0315	0515	2.00	3914.5m	Made up BHA and ran in hole to 279m.
EP	P	TI	0515	0600	0.75	3914.5m	Continued to run in hole BHA on drillpipe from 279m to 480m.

Phase Data to 2400hrs, 05 Nov 2004

Phase	Phase Hrs	Start On	Finish On	Cum Hrs	Cum Days	Max Depth
RIG MOVE/RIG-UP(RM)	92.5	08 Oct 2004	12 Oct 2004	92.50	3.854 days	0m
PRESPUD(PS)	25	12 Oct 2004	13 Oct 2004	117.50	4.896 days	158.0m
CONDUCTOR HOLE(CH)	9.5	15 Oct 2004	15 Oct 2004	127.00	5.292 days	192.0m
SURFACE HOLE(SH)	38.75	13 Oct 2004	16 Oct 2004	165.75	6.906 days	787.5m
SURFACE CASING(SC)	55.25	13 Oct 2004	17 Oct 2004	221.00	9.208 days	787.5m
INTERMEDIATE HOLE(IH)	250	17 Oct 2004	28 Oct 2004	471.00	19.625 days	2550.0m
INTERMEDIATE CASING(IC)	14.25	28 Oct 2004	28 Oct 2004	485.25	20.219 days	2550.0m
PRODUCTION HOLE(PH)	168.5	28 Oct 2004	05 Nov 2004	653.75	27.240 days	3914.5m
EVALUATION PRODUCTION HOLE(EP)	27.25	04 Nov 2004	05 Nov 2004	681.00	28.375 days	3914.5m

WBM Data

Mud Type:	KCL/PHPA/POLYMER	API FL:	5cm³/30m	Cl:	50000	Solids:	23.5	Viscosity:	57sec/qt
Sample-From:	Pit 3	Filter-Cake:	1/32nd"	K+C*1000:	9%	H2O:	76.5%	PV:	56cp
Time:	01:00	HTHP-FL:	0cm³/30m	Hard/Ca:	400	Oil:	0%	YP:	38lb/100ft²
Weight:	14.10ppg	HTHP-Cake:	0/32nd"	MBT:	10	Sand:	0.25	Gels 10s:	10
Temp:	0C°			PM:	0.4	pH:	9.4	Gels 10m:	30
				PF:	0.1	PHPA:	1ppb	Fann 003:	9
								Fann 006:	13
								Fann 100:	48
								Fann 200:	72
								Fann 300:	94
								Fann 600:	150

Comment: No mud treatment necessary

Bit # 6

Wear	I	O1	D	L	B	G	O2	R
	2	2	WT	A	X	I	CT	TD

Size (''):	8.50in	IADC#	M223	**Nozzles**		**Drilled over last 24 hrs**	**Calculated over Bit Run**
Mfr:	HYCALOG	WOB(avg)	0klb	No.	Size	Progress 0m	Cum. Progress 1253.5m
Type:	PDC	RPM(avg)	0	5	15/32nd"	On Bottom Hrs 0h	Cum. On Btm Hrs 58.10h
Serial No.:	109737	F.Rate	0gpm			IADC Drill Hrs 0h	Cum IADC Drill Hrs 89.90h
Bit Model	DSX104HG	SPP	0psi			Total Revs 0	Cum Total Revs 0
Depth In	2662.0m	TFA	0.863			ROP(avg) N/A	ROP(avg) 21.57 m/hr
Depth Out	3914.5m						

BHA # 5

Weight(Wet)	60.0klb	Length	295.5m	Torque(max)	0ft-lbs	D.C. (1) Ann Velocity	
Wt Below Jar(Wet)	40.0klb	String	60.0klb	Torque(Off.Btm)	0ft-lbs	D.C. (2) Ann Velocity	
		Pick-Up	60.0klb	Torque(On.Btm)	0ft-lbs	H.W.D.P. Ann Velocity	
		Slack-Off	60.0klb			D.P. Ann Velocity	

Equipment	Length	OD	ID	Serial #	Comment
8.5in Bit	0.25m	8.50in	2.50in	109737	DSX104HG
8.5in String Stab	1.83m	8.50in	2.25in	XM094	Roller Reamer with ported float
6.75in FEWD Tools	16.10m	8.38in	5.13in	606/V880	
8.5in String Stab	1.94m	8.50in	2.25in	XM088	Roller Reamer
6.5in DC	127.17m	6.50in	2.63in		
6.5in Jars	9.37m	6.50in	2.75in	DAH03584	
6.5in DC	27.23m	6.50in	2.63in		
X/O	0.81m	8.00in	2.69in	X/O12	
5in HWDP	110.77m	5.00in	3.00in		

Survey

MD (m)	Incl Deg (deg)	Corr. Az (deg)	TVD (m)	'V' Sect (m)	Dogleg (deg/30m)	N/S (m)	E/W (m)	Tool Type
3557.20	2.26	215.08	3556.71	23.36	0.08	23.36	-27.80	MWD
3586.67	2.18	216.17	3586.15	22.43	0.09	22.43	-28.47	MWD
3700.75	2.17	212.69	3700.15	18.86	0.04	18.86	-30.92	MWD
3787.16	2.50	209.01	3786.49	15.83	0.13	15.83	-32.71	MWD
3898.83	2.70	196.27	3898.05	11.18	0.17	11.18	-34.63	MWD
3914.50	2.70	196.27	3913.70	10.47	0	10.47	-34.84	Projected to TD

Bulk Stocks

Name	Unit	In	Used	Adjust	Balance
Fuel	MT	0	9	0	876.0
Drill Water	MT	0	7	0	1,041.0
Potable Water	MT	0	34	0	163.0
Gel	MT	0	0	0	158.0
Cement	MT	0	0	0	197.0
Barite	MT	0	4	0	57.0

Personnel On Board

Company	Pax
Santos	7
Transocean	66
Anadrill	2
BHI	6
Halliburton	2
M.I	2
Subsea 7	3
Schlumberger Wireline	8
Dril-Quip	1
Total	97

Casing

OD	L.O.T. / F.I.T.	Csg Shoe (MD/TVD)	Cementing
30 "	0ppg / 0ppg	191.0m / 191.0m	
13 3/8"	13.20ppg / 0ppg	778.3m / 778.3m	
9 5/8"	14.72ppg / 0ppg	2537.0m / 2537.0m	

HSE Summary

Events	Date of Last	Days Since	Remarks
Abandon Drill	31 Oct 2004	5 Days	Weekly abandon rig drill.
BOP Test	28 Oct 2004	8 Days	Tested all rams etc to 250 psi low and 5000psi high.
Environmental Incident		0 Days	
Fire Drill	31 Oct 2004	5 Days	Simulated fire in mud process room
First Aid		0 Days	
Lost Time Incident		0 Days	None
Safety Meeting	17 Oct 2004	19 Days	
Stop Cards	01 Nov 2004	4 Days	7 START Cards submitted

Marine

Weather check on 05 Nov 2004 at 24:00

Visibility	Wind Speed	Wind Dir.	Pressure	Air Temp.	Wave Height	Wave Dir.	Wave Period
10.00nm	14.0kn	225deg	1005bar	12.2C°	0m	000deg	0ft/sec

Roll	Pitch	Heave	Swell Height	Swell Dir.	Swell Period	Weather Comments
0.3deg	0.4deg	0.30m	2.1m	225deg	8.0ft/sec	

Rig Dir.	Ris. Tension	VDL	Comments
216.0deg	0klb	8788.0klb	

Boats	Arrived (date/time)	Departed (date/time)	Status	Bulks		
Lady Caroline	22:15 05/11/04		Portland	**Item**	**Unit**	**Quantity**
Lady Astrid	19:45 05/11/04		Jack Bates	**Item**	**Unit**	**Quantity**

Helicopter Movement

Flight #	Time	Destination	Comment	Pax
BZU	16:50	Jack Bates		14
BZU	17:04	Essendon		15

Santos

DRILLING MORNING REPORT # 30
CALLISTER 01 (06 Nov 2004)

From : B.Houston / P.King

Well Data

Country	Australia	M. Depth	3914.5m	Cur. Hole Size	8.500in	AFE Cost	
Field	Otway Basin	TVD	3914.5m	Casing OD	9.625in	AFE No.	
Drill Co.	Transocean	Progress	0m	Shoe TVD	2538.0m	Daily Cost	
Rig	Jack Bates	Days from spud	24.50	F.I.T. / L.O.T.	0ppg / 14.70ppg	Cum Cost	
Wtr Dpth(LAT)	129.4m	Days on well	29.98			Planned TD	3629.0m
RT-ASL(LAT)	29.0m	Current Op @ 0600	Pulling out of hole @ 1564m.				
RT-ML	158.4m	Planned Op	Rig up Schlumberger and run MDT.				

Summary of Period 0000 to 2400 Hrs

Pulled out of hole logging tools, rigged down Schlumberger. Ran in hole for wiper trip, washing & reaming through trouble spots. Commenced pulling out of hole to log.

Operations For Period 0000 Hrs to 2400 Hrs on 06 Nov 2004

Phse	Cls (RC)	Op	From	To	Hrs	Depth	Activity Description
EP	P	LOG	0000	0015	0.25	3914.5m	Continued pulling out of hole with Triple Combo.
EP	P	LOG	0015	0030	0.25	3914.5m	Removed radioactive sources from logging tools at surface
EP	P	LOG	0030	0230	2.00	3914.5m	Continued to lay out logging tools
EP	P	LOG	0230	0300	0.50	3914.5m	Rigged down Schlumberger wireline equipment.
EP	P	SM	0300	0315	0.25	3914.5m	Held toolbox meeting prior to running in hole with 8-1/2" wiper trip assembly.
EP	P	TI	0315	0515	2.00	3914.5m	Made up BHA and ran in hole to 279m.
EP	P	TI	0515	0600	0.75	3914.5m	Continued to run in hole BHA on drillpipe from 279m to 480m.
EP	P	TI	0600	0915	3.25	3914.5m	Continued to run in hole from 480m to 2538m
EP	P	CMD	0915	0930	0.25	3914.5m	Circulated at casing shoe to break up gels.
EP	P	TI	0930	1000	0.50	3914.5m	Continued to run in hole from 2538m to 2700m.
EP	P	WIN	1000	1200	2.00	3914.5m	Washed and reamed from 2700m to 2933m as per program.
EP	P	WIN	1200	1445	2.75	3914.5m	Continued to wash and ream from 2933m to 3150m as per program.
EP	P	TI	1445	1700	2.25	3914.5m	Ran in hole from 3150m to 3914m (no fill on bottom)
EP	P	CMD	1700	1815	1.25	3914.5m	Circulated bottoms up.
EP	P	FC	1815	1830	0.25	3914.5m	Flow checked. Well static.
EP	P	CMD	1830	2045	2.25	3914.5m	Circulated and weighted up to ensure mud weight 14.1 ppg in and out prior to pulling out of the hole.
EP	P	FC	2045	2200	1.25	3914.5m	Flow checked. Trip tank gaining. Shut down trip tank pump and monitored. Some u-tubing of mud apparent. Well static.
EP	P	TO	2200	2400	2.00	3914.5m	Pulled out of hole.

Operations For Period 0000 Hrs to 0600 Hrs on 07 Nov 2004

Phse	Cls (RC)	Op	From	To	Hrs	Depth	Activity Description
EP	P	TO	0000	0345	3.75	3914.5m	Continued to pull out of hole from 3590m to 2530m (just inside 9-5/8" casing shoe)
EP	P	FC	0345	0400	0.25	3914.5m	Flow checked. Well static.
EP	P	TO	0400	0500	1.00	3914.5m	Continued to pull out of hole from 2530m.
EP	P	TO	0500	0600	1.00	3914.5m	Pumped slug (pipe pulling wet) and continued to pull out of hole to 1564m.

Phase Data to 2400hrs, 06 Nov 2004

Phase	Phase Hrs	Start On	Finish On	Cum Hrs	Cum Days	Max Depth
RIG MOVE/RIG-UP(RM)	92.5	08 Oct 2004	12 Oct 2004	92.50	3.854 days	0m
PRESPUD(PS)	25	12 Oct 2004	13 Oct 2004	117.50	4.896 days	158.0m
CONDUCTOR HOLE(CH)	9.5	15 Oct 2004	15 Oct 2004	127.00	5.292 days	192.0m
SURFACE HOLE(SH)	38.75	13 Oct 2004	16 Oct 2004	165.75	6.906 days	787.5m
SURFACE CASING(SC)	55.25	13 Oct 2004	17 Oct 2004	221.00	9.208 days	787.5m
INTERMEDIATE HOLE(IH)	250	17 Oct 2004	28 Oct 2004	471.00	19.625 days	2550.0m
INTERMEDIATE CASING(IC)	14.25	28 Oct 2004	28 Oct 2004	485.25	20.219 days	2550.0m
PRODUCTION HOLE(PH)	168.5	28 Oct 2004	05 Nov 2004	653.75	27.240 days	3914.5m
EVALUATION PRODUCTION HOLE(EP)	51.25	04 Nov 2004	06 Nov 2004	705.00	29.375 days	3914.5m

WBM Data

Mud Type:	KCL/PHPA/POLYMER	API FL:	5cm³/30m	Cl:	50000	Solids:	23.5	Viscosity:	54sec/qt
Sample-From:	FL	Filter-Cake:	1/32nd"	K+C*1000:	9%	H2O:	76.5%	PV:	55cp
Time:	17:30	HTHP-FL:	0cm³/30m	Hard/Ca:	400	Oil:	0%	YP:	30lb/100ft²
Weight:	14.10ppg	HTHP-Cake:	0/32nd"	MBT:	12	Sand:	0.4	Gels 10s:	10
Temp:	130.0C°			PM:	0.4	pH:	9.3	Gels 10m:	32
				PF:	0.1	PHPA:	1ppb	Fann 003:	9
								Fann 006:	11
								Fann 100:	45
								Fann 200:	66
								Fann 300:	85
								Fann 600:	140

Comment: Added barite to maintain mud weight while circulating off bottom. Dumped contaminated mud from pits

Bit # 6RR

Wear	I	O1	D	L	B	G	O2	R
							-	

Size (''):	8.50in	IADC#	M223	**Nozzles**		**Drilled over last 24 hrs**	**Calculated over Bit Run**
Mfr:	HYCALOG	WOB(avg)	0klb	No.	Size	Progress 0m	Cum. Progress 0m
Type:	PDC	RPM(avg)	0			On Bottom Hrs 0h	Cum. On Btm Hrs 0h
Serial No.:	109737	F.Rate	0gpm			IADC Drill Hrs 0h	Cum IADC Drill Hrs 0h
Bit Model	DSX104HG	SPP	0psi			Total Revs 0	Cum Total Revs 0
Depth In	3914.5m	TFA	0.000			ROP(avg) N/A	ROP(avg) 0.00 m/hr
Depth Out	3914.5m						

Run Comment: Re-run bit for wiper trip

BHA # 6

Weight(Wet)	60.0klb	Length	279.4m	Torque(max)	0ft-lbs	D.C. (1) Ann Velocity	
Wt Below Jar(Wet)	40.0klb	String	60.0klb	Torque(Off.Btm)	0ft-lbs	D.C. (2) Ann Velocity	
		Pick-Up	60.0klb	Torque(On.Btm)	0ft-lbs	H.W.D.P. Ann Velocity	
		Slack-Off	60.0klb			D.P. Ann Velocity	

BHA Run Description: Wiper trip / clean out string

Equipment	Length	OD	ID	Serial #	Comment
8.5in Bit	0.23m	8.50in	2.50in	109737	DSX104HG - Re-run
8.5in NB Roller Reamer	1.83m	8.50in	2.25in	XM094	Roller Reamer with ported float
6.5in DC	9.19m	6.50in	2.88in		
8.5in NB Roller Reamer	1.94m	8.50in	2.25in	XM088	Roller Reamer
6.5in DC	117.98m	6.50in	2.63in		
6.5in Jars	9.37m	6.50in	2.75in	DAH03584	
6.5in DC	27.23m	6.50in	2.63in		
X/O	0.81m	8.00in	2.69in	X/O12	
5in HWDP	110.77m	5.00in	3.00in		

Survey

MD (m)	Incl Deg (deg)	Corr. Az (deg)	TVD (m)	'V' Sect (m)	Dogleg (deg/30m)	N/S (m)	E/W (m)	Tool Type
3557.20	2.26	215.08	3556.71	23.36	0.08	23.36	-27.80	MWD
3586.67	2.18	216.17	3586.15	22.43	0.09	22.43	-28.47	MWD
3700.75	2.17	212.69	3700.15	18.86	0.04	18.86	-30.92	MWD
3787.16	2.50	209.01	3786.49	15.83	0.13	15.83	-32.71	MWD
3898.83	2.70	196.27	3898.05	11.18	0.17	11.18	-34.63	MWD
3914.50	2.70	196.27	3913.70	10.47	0	10.47	-34.84	Projected to TD

Bulk Stocks

Name	Unit	In	Used	Adjust	Balance
Fuel	MT	0	12	0	864.0
Drill Water	MT	0	5	0	1,036.0
Potable Water	MT	0	38	0	125.0
Gel	MT	0	0	0	158.0
Cement	MT	0	0	0	197.0
Barite	MT	0	9	0	48.0

Personnel On Board

Company	Pax
Santos	6
Transocean	66
Anadrill	1
BHI	2
Halliburton	2
M.I	2
Subsea 7	3
Schlumberger Wireline	8
Dril-Quip	1
Total	91

Casing

OD	L.O.T. / F.I.T.	Csg Shoe (MD/TVD)	Cementing
30 "	0ppg / 0ppg	191.0m / 191.0m	
13 3/8"	13.20ppg / 0ppg	778.3m / 778.3m	
9 5/8"	14.72ppg / 0ppg	2537.0m / 2537.0m	

HSE Summary

Events	Date of Last	Days Since	Remarks
Abandon Drill	31 Oct 2004	6 Days	Weekly abandon rig drill.
BOP Test	28 Oct 2004	9 Days	Tested all rams etc to 250 psi low and 5000psi high.
Environmental Incident		0 Days	
Fire Drill	31 Oct 2004	6 Days	Simulated fire in mud process room
First Aid		0 Days	
Lost Time Incident		0 Days	None
Safety Meeting	17 Oct 2004	20 Days	
Stop Cards	01 Nov 2004	5 Days	7 START Cards submitted

Marine

Weather check on 06 Nov 2004 at 24:00

Visibility	Wind Speed	Wind Dir.	Pressure	Air Temp.	Wave Height	Wave Dir.	Wave Period
10.00nm	21.0kn	180deg	1017bar	12.6C°	0m	000deg	0ft/sec

Roll	Pitch	Heave	Swell Height	Swell Dir.	Swell Period	Weather Comments
0.5deg	0.5deg	0.60m	2.4m	180deg	10.0ft/sec	

Rig Dir.	Ris. Tension	VDL	Comments
216.0deg	0klb	8684.0klb	

Boats	Arrived (date/time)	Departed (date/time)	Status	Bulks		
Lady Astrid	19:45 05/11/04		Jack Bates	**Item**	**Unit**	**Quantity**
Lady Caroline		22:15 05/11/04	Portland	**Item**	**Unit**	**Quantity**

Helicopter Movement

Flight #	Time	Destination	Comment	Pax
BHI	14:24	Jack Bates		0
BHI	14:34	Essendon		6

Santos

DRILLING MORNING REPORT # 31
CALLISTER 01 (07 Nov 2004)

From : B.Houston / P.King

Well Data

Country	Australia	M. Depth	3914.5m	Cur. Hole Size	8.500in	AFE Cost	
Field	Otway Basin	TVD	3914.5m	Casing OD	9.625in	AFE No.	
Drill Co.	Transocean	Progress	0m	Shoe TVD	2538.0m	Daily Cost	
Rig	Jack Bates	Days from spud	25.50	F.I.T. / L.O.T.	0ppg / 14.70ppg	Cum Cost	
Wtr Dpth(LAT)	129.4m	Days on well	30.98			Planned TD	3629.0m
RT-ASL(LAT)	29.0m	Current Op @ 0600	Pulling out of hole with MDT.				
RT-ML	158.4m	Planned Op	Rig down MDT. Rig up and run Log #3 CMR.				

Summary of Period 0000 to 2400 Hrs

Continued to pull out of hole after wiper trip. Rigged up Schlumberger and ran Log #2 MDT. Log unsuccessful. POH and re-ran Log #2 MDT.

Operations For Period 0000 Hrs to 2400 Hrs on 07 Nov 2004

Phse	Cls (RC)	Op	From	To	Hrs	Depth	Activity Description
EP	P	TO	0000	0345	3.75	3914.5m	Continued to pull out of hole from 3590m to 2530m (just inside 9-5/8" casing shoe)
EP	P	FC	0345	0400	0.25	3914.5m	Flow checked. Well static.
EP	P	TO	0400	0500	1.00	3914.5m	Continued to pull out of hole from 2530m to 2021m.
EP	P	TO	0500	0600	1.00	3914.5m	Pumped 30 bbl slug (pipe pulling wet) and continued to pull out of hole to 1564m.
EP	P	TO	0600	0815	2.25	3914.5m	Continued to pull out of hole from 1564m to 279m
EP	P	TO	0815	1000	1.75	3914.5m	Pulled out of hole and racked back BHA from 279m to surface.
EP	P	LOG	1000	1130	1.50	3914.5m	Rigged up Schlumberger.
EP	P	LOG	1130	1800	6.50	3914.5m	Ran Log #2 MDT. (Hole conditions good. No drag or hang-up noted while RIH or POH) Conducted 11 pre-tests (8 no seat, 1 tight, 2 shale tests). POH with toolstring.
EP	P	LOG	1800	2130	3.50	3914.5m	Toolstring at surface. Changed out pressure plate whilst Schlumberger troubleshooting telemetry problem. Replaced telemetry power module and changed out to large hole packer.
EP	P	LOG	2130	2400	2.50	3914.5m	Commenced re-running Log #2 MDT.

Operations For Period 0000 Hrs to 0600 Hrs on 08 Nov 2004

Phse	Cls (RC)	Op	From	To	Hrs	Depth	Activity Description
EP	P	LOG	0000	0345	3.75	3914.5m	Continued to run Log #2 MDT. Conducted 15 pre-tests (12 no seat, 2 tight, 1 shale test). Aborted MDT.
EP	P	LOG	0345	0600	2.25	3914.5m	Commenced pulling out of hole with MDT.

Phase Data to 2400hrs, 07 Nov 2004

Phase	Phase Hrs	Start On	Finish On	Cum Hrs	Cum Days	Max Depth
RIG MOVE/RIG-UP(RM)	92.5	08 Oct 2004	12 Oct 2004	92.50	3.854 days	0m
PRESPUD(PS)	25	12 Oct 2004	13 Oct 2004	117.50	4.896 days	158.0m
CONDUCTOR HOLE(CH)	9.5	15 Oct 2004	15 Oct 2004	127.00	5.292 days	192.0m
SURFACE HOLE(SH)	38.75	13 Oct 2004	16 Oct 2004	165.75	6.906 days	787.5m
SURFACE CASING(SC)	55.25	13 Oct 2004	17 Oct 2004	221.00	9.208 days	787.5m
INTERMEDIATE HOLE(IH)	250	17 Oct 2004	28 Oct 2004	471.00	19.625 days	2550.0m
INTERMEDIATE CASING(IC)	14.25	28 Oct 2004	28 Oct 2004	485.25	20.219 days	2550.0m
PRODUCTION HOLE(PH)	168.5	28 Oct 2004	05 Nov 2004	653.75	27.240 days	3914.5m
EVALUATION PRODUCTION HOLE(EP)	75.25	04 Nov 2004	07 Nov 2004	729.00	30.375 days	3914.5m

WBM Data

Mud Type:	KCL/PHPA/POLYMER	API FL:	5cm³/30m	Cl:	50000	Solids:	25.5	Viscosity:	54sec/qt
Sample-From:	FL	Filter-Cake:	1/32nd"	K+C*1000:	9%	H2O:	76.5%	PV:	54cp
Time:	14:00	HTHP-FL:	0cm³/30m	Hard/Ca:	400	Oil:	0%	YP:	31lb/100ft²
Weight:	14.10ppg	HTHP-Cake:	0/32nd"	MBT:	12	Sand:	0.25	Gels 10s:	10
Temp:	0C°			PM:	0.4	pH:	9.1	Gels 10m:	34
				PF:	0.1	PHPA:	1ppb	Fann 003:	9
								Fann 006:	11
								Fann 100:	45
								Fann 200:	65
								Fann 300:	85
								Fann 600:	139

Comment: Received 10 sks OS-1 to correct no. received on 4th Nov.

Bit # 6RR

Wear	I	O1	D	L	B	G	O2	R
	2	2	WT	A	X	I	CT	BLANK

Size (''):	8.50in	IADC#	M223	**Nozzles**	**Drilled over last 24 hrs**		**Calculated over Bit Run**
Mfr:	HYCALOG	WOB(avg)	0klb	No. Size	Progress	0m	Cum. Progress 0m
Type:	PDC	RPM(avg)	0		On Bottom Hrs	0h	Cum. On Btm Hrs 0h
Serial No.:	109737	F.Rate	0gpm		IADC Drill Hrs	0h	Cum IADC Drill Hrs 0h
Bit Model	DSX104HG	SPP	0psi		Total Revs	0	Cum Total Revs 0
Depth In	3914.5m	TFA	0.000		ROP(avg)	N/A	ROP(avg) 0.00 m/hr
Depth Out	3914.5m						
Run Comment		Re-run bit for wiper trip					

BHA # 6

Weight(Wet)	60.0klb	Length	279.4m	Torque(max)	0ft-lbs	D.C. (1) Ann Velocity
Wt Below Jar(Wet)	40.0klb	String	60.0klb	Torque(Off.Btm)	0ft-lbs	D.C. (2) Ann Velocity
		Pick-Up	60.0klb	Torque(On.Btm)	0ft-lbs	H.W.D.P. Ann Velocity
		Slack-Off	60.0klb			D.P. Ann Velocity
BHA Run Description		Wiper trip / clean out string				

Equipment	Length	OD	ID	Serial #	Comment
8.5in Bit	0.23m	8.50in	2.50in	109737	DSX104HG - Re-run
8.5in NB Roller Reamer	1.83m	8.50in	2.25in	XM094	Roller Reamer with ported float
6.5in DC	9.19m	6.50in	2.88in		
8.5in NB Roller Reamer	1.94m	8.50in	2.25in	XM088	Roller Reamer
6.5in DC	117.98m	6.50in	2.63in		
6.5in Jars	9.37m	6.50in	2.75in	DAH03584	
6.5in DC	27.23m	6.50in	2.63in		
X/O	0.81m	8.00in	2.69in	X/O12	
5in HWDP	110.77m	5.00in	3.00in		

Survey

MD (m)	Incl Deg (deg)	Corr. Az (deg)	TVD (m)	'V' Sect (m)	Dogleg (deg/30m)	N/S (m)	E/W (m)	Tool Type
3557.20	2.26	215.08	3556.71	23.36	0.08	23.36	-27.80	MWD
3586.67	2.18	216.17	3586.15	22.43	0.09	22.43	-28.47	MWD
3700.75	2.17	212.69	3700.15	18.86	0.04	18.86	-30.92	MWD
3787.16	2.50	209.01	3786.49	15.83	0.13	15.83	-32.71	MWD
3898.83	2.70	196.27	3898.05	11.18	0.17	11.18	-34.63	MWD
3914.50	2.70	196.27	3913.70	10.47	0	10.47	-34.84	Projected to TD

Bulk Stocks

Name	Unit	In	Used	Adjust	Balance
Fuel	MT	0	7	0	857.0
Drill Water	MT	0	18	0	1,018.0
Potable Water	MT	125	29	178	399.0
Gel	MT	0	0	0	158.0
Cement	MT	0	0	0	197.0
Barite	MT	0	0	0	48.0

Personnel On Board

Company	Pax
Santos	6
Transocean	66
Anadrill	1
BHI	2
Halliburton	2
M.I	2
Subsea 7	3
Schlumberger Wireline	8
Dril-Quip	1
Total	91

Casing

OD	L.O.T. / F.I.T.	Csg Shoe (MD/TVD)	Cementing
30 ''	0ppg / 0ppg	191.0m / 191.0m	
13 3/8''	13.20ppg / 0ppg	778.3m / 778.3m	
9 5/8''	14.72ppg / 0ppg	2537.0m / 2537.0m	

HSE Summary

Events	Date of Last	Days Since	Remarks
Abandon Drill	31 Oct 2004	7 Days	Weekly abandon rig drill.
BOP Test	28 Oct 2004	10 Days	Tested all rams etc to 250 psi low and 5000psi high.
Environmental Incident		0 Days	
Fire Drill	07 Nov 2004	0 Days	Simulated fire in mud process room
First Aid		0 Days	
Lost Time Incident		0 Days	None
Safety Meeting	07 Nov 2004	0 Days	
Stop Cards	01 Nov 2004	6 Days	7 START Cards submitted

Marine

Weather check on 07 Nov 2004 at 24:00

Visibility	Wind Speed	Wind Dir.	Pressure	Air Temp.	Wave Height	Wave Dir.	Wave Period
10.00nm	10.0kn	170deg	1022bar	12.8C°	0m	000deg	0ft/sec

Roll	Pitch	Heave	Swell Height	Swell Dir.	Swell Period	Weather Comments
0.3deg	0.2deg	0.30m	2.7m	170deg	10.0ft/sec	

Rig Dir.	Ris. Tension	VDL	Comments
216.0deg	0klb	8816.0klb	

Boats	Arrived (date/time)	Departed (date/time)	Status	Bulks		
Lady Caroline		06:15 07/11/04	Portland	**Item**	**Unit**	**Quantity**
Lady Astrid	19:45 05/11/04		Jack Bates	**Item**	**Unit**	**Quantity**

Santos

DRILLING MORNING REPORT # 32
CALLISTER 01 (08 Nov 2004)

From : B.Houston / P.King

Well Data

Country	Australia	M. Depth	3914.5m	Cur. Hole Size	8.500in	AFE Cost	
Field	Otway Basin	TVD	3914.5m	Casing OD	9.625in	AFE No.	
Drill Co.	Transocean	Progress	0m	Shoe TVD	2538.0m	Daily Cost	
Rig	Jack Bates	Days from spud	26.50	F.I.T. / L.O.T.	0ppg / 14.70ppg	Cum Cost	
Wtr Dpth(LAT)	129.4m	Days on well	31.94			Planned TD	3629.0m
RT-ASL(LAT)	29.0m	Current Op @ 0600	Circulating and conditioning mud to 14.1 ppg.				
RT-ML	158.4m	Planned Op	Flow check. Pump slug and pull out of hole to shoe. Slip & cut line. Run back to TD, circulate bottoms up prior to POH.				

Summary of Period 0000 to 2400 Hrs

Re-ran MDT. Ran CMR log. Commenced running MSCT. POH MSCT due to slow trip tank gain. Commenced RIH for wiper trip.

Operations For Period 0000 Hrs to 2400 Hrs on 08 Nov 2004

Phse	Cls (RC)	Op	From	To	Hrs	Depth	Activity Description
EP	P	LOG	0000	0345	3.75	3914.5m	Continued to run Log #2 MDT. Conducted 15 pre-tests (12 no seat, 2 tight, 1 shale test). Aborted MDT.
EP	P	LOG	0345	0600	2.25	3914.5m	Commenced pulling out of hole with MDT.
EP	P	LOG	0600	0700	1.00	3914.5m	Layed out MDT string.
EP	P	LOG	0700	0800	1.00	3914.5m	Made up Log #3 CMR-GR (Combinable Magnetic Resonance). Insufficient tool weight to run in heavy mud.
EP	P	LOG	0800	0830	0.50	3914.5m	Added DLT to toolstring to increase weight.
EP	P	LOG	0830	1545	7.25	3914.5m	Ran Log #3 CMR-GR. (Hole condition good, no drag or overpull while RIH or POH)
EP	P	LOG	1545	1730	1.75	3914.5m	Layed out CMR string. Made up Log #4 MSCT (Rotary Sidewall Cores)
EP	P	LOG	1730	1930	2.00	3914.5m	Ran Log #4 MSCT. (Trip tank gain increased to ~5 bbl/hr while RIH. Analysis of MDT hydrostatic pressures and CMR logs indicated possible influx from sand at 3471m). Commenced pulling out of hole from 3117m for wiper trip.
EP	P	LOG	1930	1945	0.25	3914.5m	Layed out MSCT.
EP	P	LOG	1945	2015	0.50	3914.5m	Rigged down Schlumberger.
EP	P	WT	2115	2130	0.25	3914.5m	Made up and ran wiper trip BHA to 279m.
EP	P	WT	2130	2400	2.50	3914.5m	Continued running in hole from 279m to 2220m.

Operations For Period 0000 Hrs to 0600 Hrs on 09 Nov 2004

Phse	Cls (RC)	Op	From	To	Hrs	Depth	Activity Description
EP	P	WT	0000	0030	0.50	3914.5m	Continued to run in hole from 2220m to 2537m.
EP	P	WT	0030	0315	2.75	3914.5m	Continued to run in hole from 2537m to 3914.5m.
EP	P	CMD	0315	0600	2.75	3914.5m	Tagged bottom (no fill). Commenced circulating. As a precautionary measure prior to bottoms up, closed annular and circulated through choke. Max 722 units gas. Minimum MW out 12.6 ppg. (Chlorides 33,000 in 13.6 ppg mud sample; 35,000 in 12.6 ppg mud sample; 52,000 in 14.1 ppg mud sample) Circulated and conditioned mud back up to 14.1 ppg in and out.

Phase Data to 2400hrs, 08 Nov 2004

Phase	Phase Hrs	Start On	Finish On	Cum Hrs	Cum Days	Max Depth
RIG MOVE/RIG-UP(RM)	92.5	08 Oct 2004	12 Oct 2004	92.50	3.854 days	0m
PRESPUD(PS)	25	12 Oct 2004	13 Oct 2004	117.50	4.896 days	158.0m
CONDUCTOR HOLE(CH)	9.5	15 Oct 2004	15 Oct 2004	127.00	5.292 days	192.0m
SURFACE HOLE(SH)	38.75	13 Oct 2004	16 Oct 2004	165.75	6.906 days	787.5m
SURFACE CASING(SC)	55.25	13 Oct 2004	17 Oct 2004	221.00	9.208 days	787.5m
INTERMEDIATE HOLE(IH)	250	17 Oct 2004	28 Oct 2004	471.00	19.625 days	2550.0m
INTERMEDIATE CASING(IC)	14.25	28 Oct 2004	28 Oct 2004	485.25	20.219 days	2550.0m
PRODUCTION HOLE(PH)	168.5	28 Oct 2004	05 Nov 2004	653.75	27.240 days	3914.5m
EVALUATION PRODUCTION HOLE(EP)	98.25	04 Nov 2004	08 Nov 2004	752.00	31.333 days	3914.5m

WBM Data

Mud Type:	KCL/PHPA/POLYMER	API FL:	5cm³/30m	Cl:	52000	Solids:	25	Viscosity:	58sec/qt
Sample-From:	Active pit	Filter-Cake:	1/32nd"	K+C*1000:	9%	H2O:	75%	PV:	47cp
Time:	16:00	HTHP-FL:	0cm³/30m	Hard/Ca:	420	Oil:	0%	YP:	31lb/100ft²
Weight:	14.10ppg	HTHP-Cake:	0/32nd"	MBT:	12	Sand:	0.25	Gels 10s:	10
Temp:	0C°			PM:	0.3	pH:	9.2	Gels 10m:	35
				PF:	0.1	PHPA:	1ppb	Fann 003:	8
								Fann 006:	10
								Fann 100:	40
								Fann 200:	61
								Fann 300:	78
								Fann 600:	125

Comment: Conditioned surface volume before offloading to boat, 463bbls @9.6ppg for use on Amrit-1. Treated reserve mud with biocide. Received barite from Lady Astrid. Cut back weight in reserve pit 5 in preparation for P & A. Gained 49bbls while logging; possibly from downhole water influx.

Bit # 6RR

Wear	I	O1	D	L	B	G	O2	R
	2	2	WT	A	X	I	CT	BLANK

Size (''):	8.50in	IADC#	M223	**Nozzles**		**Drilled over last 24 hrs**	**Calculated over Bit Run**
Mfr:	HYCALOG	WOB(avg)	0klb	No.	Size	Progress 0m	Cum. Progress 0m
Type:	PDC	RPM(avg)	0			On Bottom Hrs 0h	Cum. On Btm Hrs 0h
Serial No.:	109737	F.Rate	0gpm			IADC Drill Hrs 0h	Cum IADC Drill Hrs 0h
Bit Model	DSX104HG	SPP	0psi			Total Revs 0	Cum Total Revs 0
Depth In	3914.5m	TFA	0.000			ROP(avg) N/A	ROP(avg) 0.00 m/hr
Depth Out	3914.5m						

Run Comment: Re-run bit for wiper trip

BHA # 6

Weight(Wet)	60.0klb	Length	279.4m	Torque(max)	0ft-lbs	D.C. (1) Ann Velocity	
Wt Below Jar(Wet)	40.0klb	String	60.0klb	Torque(Off.Btm)	0ft-lbs	D.C. (2) Ann Velocity	
		Pick-Up	60.0klb	Torque(On.Btm)	0ft-lbs	H.W.D.P. Ann Velocity	
		Slack-Off	60.0klb			D.P. Ann Velocity	

BHA Run Description: Wiper trip / clean out string

Equipment	Length	OD	ID	Serial #	Comment
8.5in Bit	0.23m	8.50in	2.50in	109737	DSX104HG - Re-run
8.5in NB Roller Reamer	1.83m	8.50in	2.25in	XM094	Roller Reamer with ported float
6.5in DC	9.19m	6.50in	2.88in		
8.5in NB Roller Reamer	1.94m	8.50in	2.25in	XM088	Roller Reamer
6.5in DC	117.98m	6.50in	2.63in		
6.5in Jars	9.37m	6.50in	2.75in	DAH03584	
6.5in DC	27.23m	6.50in	2.63in		
X/O	0.81m	8.00in	2.69in	X/O12	
5in HWDP	110.77m	5.00in	3.00in		

Survey

MD (m)	Incl Deg (deg)	Corr. Az (deg)	TVD (m)	'V' Sect (m)	Dogleg (deg/30m)	N/S (m)	E/W (m)	Tool Type
3557.20	2.26	215.08	3556.71	23.36	0.08	23.36	-27.80	MWD
3586.67	2.18	216.17	3586.15	22.43	0.09	22.43	-28.47	MWD
3700.75	2.17	212.69	3700.15	18.86	0.04	18.86	-30.92	MWD
3787.16	2.50	209.01	3786.49	15.83	0.13	15.83	-32.71	MWD
3898.83	2.70	196.27	3898.05	11.18	0.17	11.18	-34.63	MWD
3914.50	2.70	196.27	3913.70	10.47	0	10.47	-34.84	Projected to TD

Bulk Stocks

Name	Unit	In	Used	Adjust	Balance
Fuel	MT	0	7	0	850.0
Drill Water	MT	0	118	0	900.0
Potable Water	MT	0	26	0	373.0
Gel	MT	0	0	0	158.0
Cement	MT	0	0	0	197.0
Barite	MT	0	0	0	48.0

Personnel On Board

Company	Pax
Santos	5
Transocean	62
BHI	2
Halliburton	2
M.I	2
Subsea 7	3
Schlumberger Wireline	8
Dril-Quip	1
Weatherford	3
Total	88

Casing

OD	L.O.T. / F.I.T.	Csg Shoe (MD/TVD)	Cementing
30 "	0ppg / 0ppg	191.0m / 191.0m	
13 3/8"	13.20ppg / 0ppg	778.3m / 778.3m	
9 5/8"	14.72ppg / 0ppg	2537.0m / 2537.0m	

HSE Summary

Events	Date of Last	Days Since	Remarks
Abandon Drill	31 Oct 2004	8 Days	Weekly abandon rig drill.
BOP Test	28 Oct 2004	11 Days	Tested all rams etc to 250 psi low and 5000psi high.
Environmental Incident		0 Days	
Fire Drill	07 Nov 2004	1 Day	Simulated fire in mud process room
First Aid		0 Days	
Lost Time Incident		0 Days	None
Safety Meeting	07 Nov 2004	1 Day	
Stop Cards	01 Nov 2004	7 Days	7 START Cards submitted

Marine

Weather check on 08 Nov 2004 at 24:00

Visibility	Wind Speed	Wind Dir.	Pressure	Air Temp.	Wave Height	Wave Dir.	Wave Period
10.00nm	12.0kn	150deg	1021bar	13.1C°	0m	000deg	0ft/sec

Roll	Pitch	Heave	Swell Height	Swell Dir.	Swell Period	Weather Comments
0.4deg	0.3deg	0.30m	1.8m	150deg	10.0ft/sec	

Rig Dir.	Ris. Tension	VDL	Comments
216.0deg	0klb	8962.0klb	

Boats	Arrived (date/time)	Departed (date/time)	Status	Bulks		
Lady Astrid	19:45 05/11/04		Jack Bates	**Item**	**Unit**	**Quantity**
Lady Caroline		06:15 07/11/04	Portland	**Item**	**Unit**	**Quantity**

Helicopter Movement

Flight #	Time	Destination	Comment	Pax
BZU	16:40	Jack Bates		11
BZU	16:59	Jack Bates		14

Santos

DRILLING MORNING REPORT # 33
CALLISTER 01 (09 Nov 2004)

From : B.Houston / P.King

Well Data

Country	Australia	M. Depth	3914.5m	Cur. Hole Size	8.500in	AFE Cost	
Field	Otway Basin	TVD	3914.5m	Casing OD	9.625in	AFE No.	
Drill Co.	Transocean	Progress	0m	Shoe TVD	2538.0m	Daily Cost	
Rig	Jack Bates	Days from spud	27.50	F.I.T. / L.O.T.	0ppg / 14.70ppg	Cum Cost	
Wtr Dpth(LAT)	129.4m	Days on well	32.94			Planned TD	3629.0m
RT-ASL(LAT)	29.0m	Current Op @ 0600	Running Log #4 MSCT (Rotary Sidewall Cores)				
RT-ML	158.4m	Planned Op	Complete MSCT. Run VSP and SWC. Commence plug and abandonment.				

Summary of Period 0000 to 2400 Hrs

Continued to RIH for wiper trip. Circulated & conditioned mud to 14.1 ppg. POH to shoe. Slip & cut drill line. RIH to TD, circulated bottoms up and POH to log.

Operations For Period 0000 Hrs to 2400 Hrs on 09 Nov 2004

Phse	Cls (RC)	Op	From	To	Hrs	Depth	Activity Description
EP	P	WT	0000	0030	0.50	3914.5m	Continued to run in hole from 2220m to 2537m.
EP	P	WT	0030	0315	2.75	3914.5m	Continued to run in hole from 2537m to 3914.5m.
EP	P	CMD	0315	0600	2.75	3914.5m	Tagged bottom (no fill). Commenced circulating. As a precautionary measure prior to bottoms up, closed annular and circulated through choke. Max 722 units gas. Minimum MW out 12.6 ppg. (Chlorides 33,000 in 13.6 ppg mud sample; 35,000 in 12.6 ppg mud sample; 52,000 in 14.1 ppg mud sample) Circulated and conditioned mud back up to 14.1 ppg in and out.
EP	P	CMD	0600	0615	0.25	3914.5m	Continued to circulate and condition mud to 14.1 ppg.
EP	P	FC	0615	0630	0.25	3914.5m	Flow checked. Well static.
EP	P	CMD	0630	0645	0.25	3914.5m	Pumped 30 bbl slug prior to pulling out of hole.
EP	P	TO	0645	0945	3.00	3914.5m	Pulled out of hole from TD to 2537m
EP	P	FC	0945	1000	0.25	3914.5m	Flow checked well at shoe. Well static. Held toolbox meeting prior to slip and cut drilling line.
EP	P	SC	1000	1200	2.00	3914.5m	Slip and cut drilling line (100 ft)
EP	P	TI	1200	1545	3.75	3914.5m	Ran in hole from 2537m to 3914.5m.
EP	P	CMD	1545	1715	1.50	3914.5m	Circulated bottoms up and flow checked. Well static.
EP	P	CMD	1715	1730	0.25	3914.5m	Pumped slug prior to pulling out of hole.
EP	P	TO	1730	2045	3.25	3914.5m	Pulled out of hole from 3914.5m to 2537m
EP	P	FC	2045	2100	0.25	3914.5m	Flow checked at shoe. Well static.
EP	P	TO	2100	2400	3.00	3914.5m	Continued to pull out of hole from 2537m to 279m. (23 bbls loss recorded from 17:30 to 24:00 - Approx. 3.5 bbl / hr)

Operations For Period 0000 Hrs to 0600 Hrs on 10 Nov 2004

Phse	Cls (RC)	Op	From	To	Hrs	Depth	Activity Description
EP	P	TO	0000	0115	1.25	3914.5m	Pulled out of hole and with BHA from 279m and racked back in derrick.
EP	P	LOG	0115	0245	1.50	3914.5m	Rigged up to re-run Log #4 MSCT (Rotary Sidewall Cores).
EP	P	LOG	0245	0600	3.25	3914.5m	Re-ran Log #4 MSCT. (No mud losses or gains recorded)

Phase Data to 2400hrs, 09 Nov 2004

Phase	Phase Hrs	Start On	Finish On	Cum Hrs	Cum Days	Max Depth
RIG MOVE/RIG-UP(RM)	92.5	08 Oct 2004	12 Oct 2004	92.50	3.854 days	0m
PRESPUD(PS)	25	12 Oct 2004	13 Oct 2004	117.50	4.896 days	158.0m
CONDUCTOR HOLE(CH)	9.5	15 Oct 2004	15 Oct 2004	127.00	5.292 days	192.0m
SURFACE HOLE(SH)	38.75	13 Oct 2004	16 Oct 2004	165.75	6.906 days	787.5m
SURFACE CASING(SC)	55.25	13 Oct 2004	17 Oct 2004	221.00	9.208 days	787.5m
INTERMEDIATE HOLE(IH)	250	17 Oct 2004	28 Oct 2004	471.00	19.625 days	2550.0m
INTERMEDIATE CASING(IC)	14.25	28 Oct 2004	28 Oct 2004	485.25	20.219 days	2550.0m
PRODUCTION HOLE(PH)	168.5	28 Oct 2004	05 Nov 2004	653.75	27.240 days	3914.5m
EVALUATION PRODUCTION HOLE(EP)	122.25	04 Nov 2004	09 Nov 2004	776.00	32.333 days	3914.5m

WBM Data

Mud Type:	KCL/PHPA/POLYMER	API FL:	6cm³/30m	Cl:	45000	Solids:	25.5	Viscosity:	60sec/qt
Sample-From:	Active pit	Filter-Cake:	1/32nd"	K+C*1000:	9%	H2O:	74.5%	PV:	42cp
Time:	20:00	HTHP-FL:	0cm³/30m	Hard/Ca:	420	Oil:	0%	YP:	31lb/100ft²
Weight:	14.10ppg	HTHP-Cake:	0/32nd"	MBT:	12	Sand:	0.5	Gels 10s:	9
Temp:	0C°			PM:	0.1	pH:	8.8	Gels 10m:	29
				PF:	0.1	PHPA:	1ppb	Fann 003:	8
								Fann 006:	10
								Fann 100:	38
								Fann 200:	57
								Fann 300:	73
								Fann 600:	115

Comment: Added barite to active to maintain mud weight as water influx returned to surface(lowest MW returned was 12.8 ppg). Built slugs for POOH. Received 50MT barite from Lady Astrid. Built 16.5ppg in prep. to displace riser. Mud weights even on second trip to TD. 23 bbls lost downhole during trip.

Bit # 6RR

Wear	I	O1	D	L	B	G	O2	R
	2	2	WT	A	X	I	CT	BLANK

Size (''):	8.50in	IADC#	M223	**Nozzles**		**Drilled over last 24 hrs**	**Calculated over Bit Run**
Mfr:	HYCALOG	WOB(avg)	0klb	No.	Size	Progress 0m	Cum. Progress 0m
Type:	PDC	RPM(avg)	0			On Bottom Hrs 0h	Cum. On Btm Hrs 0h
Serial No.:	109737	F.Rate	0gpm			IADC Drill Hrs 0h	Cum IADC Drill Hrs 0h
Bit Model	DSX104HG	SPP	0psi			Total Revs 0	Cum Total Revs 0
Depth In	3914.5m	TFA	0.000			ROP(avg) N/A	ROP(avg) 0.00 m/hr
Depth Out	3914.5m						

Run Comment: Re-run bit for wiper trip

BHA # 6

Weight(Wet)	60.0klb	Length	279.4m	Torque(max)	0ft-lbs	D.C. (1) Ann Velocity	
Wt Below Jar(Wet)	40.0klb	String	60.0klb	Torque(Off.Btm)	0ft-lbs	D.C. (2) Ann Velocity	
		Pick-Up	60.0klb	Torque(On.Btm)	0ft-lbs	H.W.D.P. Ann Velocity	
		Slack-Off	60.0klb			D.P. Ann Velocity	

BHA Run Description: Wiper trip / clean out string

Equipment	Length	OD	ID	Serial #	Comment
8.5in Bit	0.23m	8.50in	2.50in	109737	DSX104HG - Re-run
8.5in NB Roller Reamer	1.83m	8.50in	2.25in	XM094	Roller Reamer with ported float
6.5in DC	9.19m	6.50in	2.88in		
8.5in NB Roller Reamer	1.94m	8.50in	2.25in	XM088	Roller Reamer
6.5in DC	117.98m	6.50in	2.63in		
6.5in Jars	9.37m	6.50in	2.75in	DAH03584	
6.5in DC	27.23m	6.50in	2.63in		
X/O	0.81m	8.00in	2.69in	X/O12	
5in HWDP	110.77m	5.00in	3.00in		

Survey

MD (m)	Incl Deg (deg)	Corr. Az (deg)	TVD (m)	'V' Sect (m)	Dogleg (deg/30m)	N/S (m)	E/W (m)	Tool Type
3557.20	2.26	215.08	3556.71	23.36	0.08	23.36	-27.80	MWD
3586.67	2.18	216.17	3586.15	22.43	0.09	22.43	-28.47	MWD
3700.75	2.17	212.69	3700.15	18.86	0.04	18.86	-30.92	MWD
3787.16	2.50	209.01	3786.49	15.83	0.13	15.83	-32.71	MWD
3898.83	2.70	196.27	3898.05	11.18	0.17	11.18	-34.63	MWD
3914.50	2.70	196.27	3913.70	10.47	0	10.47	-34.84	Projected to TD

Bulk Stocks

Name	Unit	In	Used	Adjust	Balance
Fuel	MT	0	9	0	841.0
Drill Water	MT	0	112	0	788.0
Potable Water	MT	0	32	0	341.0
Gel	MT	0	0	0	158.0
Cement	MT	0	0	0	197.0
Barite	MT	50	55	42	85.0

Personnel On Board

Company	Pax
Santos	5
Transocean	62
BHI	2
Halliburton	2
M.I	2
Subsea 7	3
Schlumberger Wireline	8
Dril-Quip	1
Weatherford	3
Total	88

Casing

OD	L.O.T. / F.I.T.	Csg Shoe (MD/TVD)	Cementing
30 "	0ppg / 0ppg	191.0m / 191.0m	
13 3/8"	13.20ppg / 0ppg	778.3m / 778.3m	
9 5/8"	14.72ppg / 0ppg	2537.0m / 2537.0m	

HSE Summary

Events	Date of Last	Days Since	Remarks
Abandon Drill	31 Oct 2004	9 Days	Weekly abandon rig drill.
BOP Test	28 Oct 2004	12 Days	Tested all rams etc to 250 psi low and 5000psi high.
Environmental Incident		0 Days	
Fire Drill	07 Nov 2004	2 Days	Simulated fire in mud process room
First Aid		0 Days	
Lost Time Incident		0 Days	None
Safety Meeting	07 Nov 2004	2 Days	
Stop Cards	01 Nov 2004	8 Days	7 START Cards submitted

Marine

Weather check on 09 Nov 2004 at 24:00

Visibility	Wind Speed	Wind Dir.	Pressure	Air Temp.	Wave Height	Wave Dir.	Wave Period
10.00nm	23.0kn	090deg	1015bar	14.5C°	0m	000deg	0ft/sec

Roll	Pitch	Heave	Swell Height	Swell Dir.	Swell Period	Weather Comments
0.5deg	0.8deg	0.30m	1.8m	090deg	10.0ft/sec	

Rig Dir.	Ris. Tension	VDL	Comments
216.0deg	0klb	8968.0klb	

Boats	Arrived (date/time)	Departed (date/time)	Status	Bulks		
Lady Astrid		22:30 09/11/04	En-route to Portland	**Item**	**Unit**	**Quantity**
Lady Caroline	22:30 09/11/04		Jack Bates	**Item**	**Unit**	**Quantity**

Santos

DRILLING MORNING REPORT # 34
CALLISTER 01 (10 Nov 2004)

From : B.Houston / P.King

Well Data

Country	Australia	M. Depth	3914.5m	Cur. Hole Size	8.500in	AFE Cost	
Field	Otway Basin	TVD	3914.5m	Casing OD	9.625in	AFE No.	
Drill Co.	Transocean	Progress	0m	Shoe TVD	2538.0m	Daily Cost	
Rig	Jack Bates	Days from spud	28.50	F.I.T. / L.O.T.	0ppg / 14.70ppg	Cum Cost	
Wtr Dpth(LAT)	129.4m	Days on well	33.94			Planned TD	3629.0m
RT-ASL(LAT)	29.0m	Current Op @ 0600	Running in hole with cement stinger on drill pipe @ 1500m				
RT-ML	158.4m	Planned Op	RIH to TD, set cement plug #1 (3914-3714m), #2 (3714-3514m) & #3 (3514-3314m). POH. RIH to set 9-5/8" cement retainer.				

Summary of Period 0000 to 2400 Hrs

POH from wiper trip. Ran MSCT (Sidewall Cores), Ran CSI Checkshot.

Operations For Period 0000 Hrs to 2400 Hrs on 10 Nov 2004

Phse	Cls (RC)	Op	From	To	Hrs	Depth	Activity Description
EP	P	TO	0000	0115	1.25	3914.5m	Pulled out of hole and with BHA from 279m and racked back in derrick.
EP	P	LOG	0115	0245	1.50	3914.5m	Rigged up to re-run Log #4 MSCT (Rotary Sidewall Cores).
EP	P	LOG	0245	0600	3.25	3914.5m	Re-ran Log #4 MSCT. (No mud losses or gains recorded)
EP	P	LOG	0600	1400	8.00	3914.5m	Continued to run MSCT.
EP	P	LOG	1400	1445	0.75	3914.5m	Layed out MSCT and rigged up Log #5 CSI Checkshot.
EP	P	LOG	1445	2400	9.25	3914.5m	Ran Log #5 CSI Checkshot.

Operations For Period 0000 Hrs to 0600 Hrs on 11 Nov 2004

Phse	Cls (RC)	Op	From	To	Hrs	Depth	Activity Description
EP	P	LOG	0000	0115	1.25	3914.5m	Completed Log #5 CSI Checkshot.
EP	P	LOG	0115	0130	0.25	3914.5m	Layed out CSI Checkshot.
EP	P	LOG	0130	0145	0.25	3914.5m	Rigged down Schlumberger.
EP	P	HBHA	0145	0200	0.25	3914.5m	Rigged up 2-7/8" handling equipment.
EP	P	SM	0200	0215	0.25	3914.5m	Held toolbox meeting before handling 2-7/8" cement stinger.
EP	P	TI	0215	0345	1.50	3914.5m	Picked up 2-7/8" cement stinger, made up and ran in hole. (249.74m stinger length)
EP	P	TI	0345	0400	0.25	3914.5m	Changed out handling equipment to run 5" drill pipe.
EP	P	TI	0400	0430	0.50	3914.5m	Ran in hole to 536m.
EP	P	BKC	0430	0445	0.25	3914.5m	Broke circulation to ensure stinger mule shoe slots were clear. (30 spm @ 200 psi)
EP	P	TI	0445	0600	1.25	3914.5m	Continued to run in hole from 536m to 1500m.

Phase Data to 2400hrs, 10 Nov 2004

Phase	Phase Hrs	Start On	Finish On	Cum Hrs	Cum Days	Max Depth
RIG MOVE/RIG-UP(RM)	92.5	08 Oct 2004	12 Oct 2004	92.50	3.854 days	0m
PRESPUD(PS)	25	12 Oct 2004	13 Oct 2004	117.50	4.896 days	158.0m
CONDUCTOR HOLE(CH)	9.5	15 Oct 2004	15 Oct 2004	127.00	5.292 days	192.0m
SURFACE HOLE(SH)	38.75	13 Oct 2004	16 Oct 2004	165.75	6.906 days	787.5m
SURFACE CASING(SC)	55.25	13 Oct 2004	17 Oct 2004	221.00	9.208 days	787.5m
INTERMEDIATE HOLE(IH)	250	17 Oct 2004	28 Oct 2004	471.00	19.625 days	2550.0m
INTERMEDIATE CASING(IC)	14.25	28 Oct 2004	28 Oct 2004	485.25	20.219 days	2550.0m
PRODUCTION HOLE(PH)	168.5	28 Oct 2004	05 Nov 2004	653.75	27.240 days	3914.5m
EVALUATION PRODUCTION HOLE(EP)	146.25	04 Nov 2004	10 Nov 2004	800.00	33.333 days	3914.5m

WBM Data

Mud Type:	KCL/PHPA/POLYMER	API FL:	6cm³/30m	Cl:	45000	Solids:	25.5	Viscosity:	60sec/qt
Sample-From:	Active pit	Filter-Cake:	1/32nd"	K+C*1000:	9%	H2O:	75%	PV:	43cp
Time:	14:00	HTHP-FL:	0cm³/30m	Hard/Ca:	420	Oil:	0%	YP:	30lb/100ft²
Weight:	14.10ppg	HTHP-Cake:	0/32nd"	MBT:	12	Sand:	0.5	Gels 10s:	9
Temp:	0C°			PM:	0.1	pH:	8.8	Gels 10m:	29
				PF:	0.1	PHPA:	1ppb	Fann 003:	8
								Fann 006:	10
								Fann 100:	37
								Fann 200:	56
								Fann 300:	73
								Fann 600:	116

Comment: Received 8 x180, 8x210 screens and 24 Cns KOH. Adjusted polypac UL to correct inventory.
24 bbls lost downhole over past 24hrs while logging

Bit # 6RR

Wear	I	O1	D	L	B	G	O2	R
	2	2	WT	A	X	I	CT	BLANK

Size (''):	8.50in	IADC#	M223	**Nozzles**	**Drilled over last 24 hrs**	**Calculated over Bit Run**	
Mfr:	HYCALOG	WOB(avg)	0klb	No. Size	Progress 0m	Cum. Progress	0m
Type:	PDC	RPM(avg)	0		On Bottom Hrs 0h	Cum. On Btm Hrs	0h
Serial No.:	109737	F.Rate	0gpm		IADC Drill Hrs 0h	Cum IADC Drill Hrs	0h
Bit Model	DSX104HG	SPP	0psi		Total Revs 0	Cum Total Revs	0
Depth In	3914.5m	TFA	0.000		ROP(avg) N/A	ROP(avg)	0.00 m/hr
Depth Out	3914.5m						
Run Comment		Re-run bit for wiper trip					

BHA # 6

Weight(Wet)	60.0klb	Length	279.4m	Torque(max)	0ft-lbs	D.C. (1) Ann Velocity	
Wt Below Jar(Wet)	40.0klb	String	60.0klb	Torque(Off.Btm)	0ft-lbs	D.C. (2) Ann Velocity	
		Pick-Up	60.0klb	Torque(On.Btm)	0ft-lbs	H.W.D.P. Ann Velocity	
		Slack-Off	60.0klb			D.P. Ann Velocity	
BHA Run Description		Wiper trip / clean out string					

Equipment	Length	OD	ID	Serial #	Comment
8.5in Bit	0.23m	8.50in	2.50in	109737	DSX104HG - Re-run
8.5in NB Roller Reamer	1.83m	8.50in	2.25in	XM094	Roller Reamer with ported float
6.5in DC	9.19m	6.50in	2.88in		
8.5in NB Roller Reamer	1.94m	8.50in	2.25in	XM088	Roller Reamer
6.5in DC	117.98m	6.50in	2.63in		
6.5in Jars	9.37m	6.50in	2.75in	DAH03584	
6.5in DC	27.23m	6.50in	2.63in		
X/O	0.81m	8.00in	2.69in	X/O12	
5in HWDP	110.77m	5.00in	3.00in		

Survey

MD (m)	Incl Deg (deg)	Corr. Az (deg)	TVD (m)	'V' Sect (m)	Dogleg (deg/30m)	N/S (m)	E/W (m)	Tool Type
3557.20	2.26	215.08	3556.71	23.36	0.08	23.36	-27.80	MWD
3586.67	2.18	216.17	3586.15	22.43	0.09	22.43	-28.47	MWD
3700.75	2.17	212.69	3700.15	18.86	0.04	18.86	-30.92	MWD
3787.16	2.50	209.01	3786.49	15.83	0.13	15.83	-32.71	MWD
3898.83	2.70	196.27	3898.05	11.18	0.17	11.18	-34.63	MWD
3914.50	2.70	196.27	3913.70	10.47	0	10.47	-34.84	Projected to TD

Bulk Stocks

Name	Unit	In	Used	Adjust	Balance
Fuel	MT	0	11	0	830.0
Drill Water	MT	0	27	0	761.0
Potable Water	MT	0	31	0	310.0
Gel	MT	0	0	0	158.0
Cement	MT	0	0	0	197.0
Barite	MT	0	11	0	74.0

Personnel On Board

Company	Pax
Santos	5
Transocean	63
BHI	2
Halliburton	2
M.I	2
Subsea 7	3
Schlumberger Wireline	8
Dril-Quip	1
Weatherford	3
Total	89

Casing

OD	L.O.T. / F.I.T.	Csg Shoe (MD/TVD)	Cementing
30 ''	0ppg / 0ppg	191.0m / 191.0m	
13 3/8''	13.20ppg / 0ppg	778.3m / 778.3m	
9 5/8''	14.72ppg / 0ppg	2537.0m / 2537.0m	

HSE Summary

Events	Date of Last	Days Since	Remarks
Abandon Drill	31 Oct 2004	10 Days	Weekly abandon rig drill.
BOP Test	28 Oct 2004	13 Days	Tested all rams etc to 250 psi low and 5000psi high.
Environmental Incident		0 Days	
Fire Drill	07 Nov 2004	3 Days	Simulated fire in mud process room
First Aid		0 Days	
Lost Time Incident		0 Days	None
Safety Meeting	07 Nov 2004	3 Days	
Stop Cards	01 Nov 2004	9 Days	7 START Cards submitted

Marine

Weather check on 10 Nov 2004 at 24:00

Visibility	Wind Speed	Wind Dir.	Pressure	Air Temp.	Wave Height	Wave Dir.	Wave Period
12.00nm	21.0kn	020deg	1003bar	18.5C°	0m	000deg	0ft/sec

Roll	Pitch	Heave	Swell Height	Swell Dir.	Swell Period	Weather Comments
0.5deg	0.5deg	0.60m	1.5m	020deg	10.0ft/sec	

Rig Dir.	Ris. Tension	VDL	Comments
216.0deg	0klb	8869.0klb	

Boats	Arrived (date/time)	Departed (date/time)	Status
Lady Caroline	22:30 09/11/04		Jack Bates
Lady Astrid		22:30 09/11/04	En-route to Portland

Bulks		
Item	**Unit**	**Quantity**
Item	**Unit**	**Quantity**

Helicopter Movement

Flight #	Time	Destination	Comment	Pax
BZU	15:36	Jack Bates		14
BZU	15:51	Essendon		13

Santos

DRILLING MORNING REPORT # 35
CALLISTER 01 (11 Nov 2004)

From : B.Houston / P.King

Well Data

Country	Australia	M. Depth	3914.5m	Cur. Hole Size	8.500in	AFE Cost	
Field	Otway Basin	TVD	3914.5m	Casing OD	9.625in	AFE No.	
Drill Co.	Transocean	Progress	0m	Shoe TVD	2538.0m	Daily Cost	
Rig	Jack Bates	Days from spud	29.50	F.I.T. / L.O.T.	0ppg / 14.70ppg	Cum Cost	
Wtr Dpth(LAT)	129.4m	Days on well	34.94			Planned TD	3629.0m
RT-ASL(LAT)	29.0m	Current Op @ 0600	Pulling out of hole at 821m.				
RT-ML	158.4m	Planned Op	POH and lay out 2-7/8" cement stinger. RIH and set 9-5/8" EZSV cement retainer. Squeeze cement plug #4. Set cement plug #5. Circulate well to inhibited mud. Pull 9-5/8" wear bushing. Cut and retrieve 9-5/8" casing at 248m.				

Summary of Period 0000 to 2400 Hrs

Completed Log #5 CSI Checkshot. Ran 2-7/8" cement stinger and drill pipe to bottom. Set cement plug #1, #2 & #3.

Operations For Period 0000 Hrs to 2400 Hrs on 11 Nov 2004

Phse	Cls (RC)	Op	From	To	Hrs	Depth	Activity Description
EP	P	LOG	0000	0115	1.25	3914.5m	Completed Log #5 CSI Checkshot.
EP	P	LOG	0115	0130	0.25	3914.5m	Layed out CSI Checkshot.
EP	P	LOG	0130	0145	0.25	3914.5m	Rigged down Schlumberger.
PA	P	HBHA	0145	0200	0.25	3914.5m	Rigged up 2-7/8" handling equipment.
PA	P	SM	0200	0215	0.25	3914.5m	Held toolbox meeting before handling 2-7/8" cement stinger.
PA	P	TI	0215	0345	1.50	3914.5m	Picked up 2-7/8" cement stinger, made up and ran in hole. (249.74m stinger length)
PA	P	TI	0345	0400	0.25	3914.5m	Changed out handling equipment to run 5" drill pipe.
PA	P	TI	0400	0430	0.50	3914.5m	Ran in hole to 536m.
PA	P	BKC	0430	0445	0.25	3914.5m	Broke circulation to ensure stinger mule shoe slots were clear. (30 spm @ 200 psi)
PA	P	TI	0445	0600	1.25	3914.5m	Continued to run in hole from 536m to 1500m.
PA	P	TI	0600	0745	1.75	3914.5m	Continued to run in hole from 1500m to 2505m.
PA	P	TI	0745	0800	0.25	3914.5m	Picked up and made up cement stand and racked back same.
PA	P	TI	0800	1130	3.50	3914.5m	Continued to run cementing string from 2505m to 3902m
PA	P	TI	1130	1200	0.50	3914.5m	Made up cement stand, ran in hole and tagged bottom @ 3914m
PA	P	CMD	1200	1330	1.50	3914.5m	Circulated bottoms up and conditioned mud to 14.1 ppg. (1300 units gas, 44000 Cl)
EP	P	SM	1330	1345	0.25	3914.5m	Held toolbox meeting prior to pumping cement plug #1.
PA	P	CMP	1345	1400	0.25	3914.5m	Flushed and tested surface lines.
PA	P	CMP	1400	1500	1.00	3914.5m	Pumped cement plug #1 (3714m - 3914m). (10 bbls drill water, P/T, 5 bbl drill water, 46 bbl Class G cement slurry, 5 bbl drill water, 205 bbl displacement)
PA	P	TO	1500	1645	1.75	3914.5m	Pulled out of hole from 3914m to 3714m.
PA	P	CMD	1645	1845	2.00	3914.5m	Circulated bottoms up and conditioned mud to 14.1 ppg (700 units gas)
PA	P	CMP	1845	1945	1.00	3914.5m	Pumped cement plug #2 (3514m - 3714m) (10 bbls drill water, P/T, 5 bbl drill water, 46 bbl Class G cement slurry, 5 bbl drill water, 185 bbl displacement)
PA	P	TO	1945	2045	1.00	3914.5m	Pulled out of hole from 3714m to 3514m.
PA	P	CMD	2045	2215	1.50	3914.5m	Circulated bottoms up and conditioned mud to 14.1ppg (760 units gas)
PA	P	CMP	2215	2315	1.00	3914.5m	Pumped cement plug #3 (3514m - 3314m) (10 bbl drill water, P/T, 5 bbl drill water, 46 bbl Class G cement slurry, 5 bbl drill water, 175 bbl displacement)
PA	P	TO	2315	2400	0.75	3914.5m	Pulled out of hole from 3514m to 3303m.

Operations For Period 0000 Hrs to 0600 Hrs on 12 Nov 2004

Phse	Cls (RC)	Op	From	To	Hrs	Depth	Activity Description
PA	P	TO	0000	0015	0.25	3914.5m	Continued to pull out of hole from 3303m to 3215m.
PA	P	CMD	0015	0130	1.25	3914.5m	Circulated bottoms up and conditioned mud.
PA	P	FC	0130	0145	0.25	3914.5m	Flow checked. Well static.
PA	P	CMD	0145	0200	0.25	3914.5m	Pumped heavy weight slug.
PA	P	TO	0200	0315	1.25	3914.5m	Pulled out of hole from 3215m to 2537m (~ 9-5/8" casing shoe)
PA	P	FC	0315	0330	0.25	3914.5m	Flow checked. Well static.
PA	P	TO	0330	0600	2.50	3914.5m	Continued to pull out of hole from 2537m to 821m.

Phase Data to 2400hrs, 11 Nov 2004

Phase	Phase Hrs	Start On	Finish On	Cum Hrs	Cum Days	Max Depth
RIG MOVE/RIG-UP(RM)	92.5	08 Oct 2004	12 Oct 2004	92.50	3.854 days	0m
PRESPUD(PS)	25	12 Oct 2004	13 Oct 2004	117.50	4.896 days	158.0m
CONDUCTOR HOLE(CH)	9.5	15 Oct 2004	15 Oct 2004	127.00	5.292 days	192.0m
SURFACE HOLE(SH)	38.75	13 Oct 2004	16 Oct 2004	165.75	6.906 days	787.5m
SURFACE CASING(SC)	55.25	13 Oct 2004	17 Oct 2004	221.00	9.208 days	787.5m
INTERMEDIATE HOLE(IH)	250	17 Oct 2004	28 Oct 2004	471.00	19.625 days	2550.0m
INTERMEDIATE CASING(IC)	14.25	28 Oct 2004	28 Oct 2004	485.25	20.219 days	2550.0m
PRODUCTION HOLE(PH)	168.5	28 Oct 2004	05 Nov 2004	653.75	27.240 days	3914.5m
EVALUATION PRODUCTION HOLE(EP)	148.25	04 Nov 2004	11 Nov 2004	802.00	33.417 days	3914.5m
PLUG AND ABANDON(PA)	22	11 Nov 2004	11 Nov 2004	824.00	34.333 days	3914.5m

WBM Data

Mud Type:	KCL/PHPA/POLYMER	API FL:	8cm³/30m	Cl:	43000	Solids:	25.5
Sample-From:	Active pit	Filter-Cake:	2/32nd"	K+C*1000:	9%	H2O:	75%
Time:	21:00	HTHP-FL:	0cm³/30m	Hard/Ca:	550	Oil:	0%
Weight:	14.10ppg	HTHP-Cake:	0/32nd"	MBT:	12	Sand:	0.5
Temp:	0C°			PM:	0	pH:	10.5
				PF:	0	PHPA:	1ppb

Viscosity:	60sec/qt
PV:	36cp
YP:	31lb/100ft²
Gels 10s:	12
Gels 10m:	37
Fann 003:	11
Fann 006:	13
Fann 100:	36
Fann 200:	51
Fann 300:	67
Fann 600:	103

Comment: No discrete cement observed when circulating from top of plugs. In each case, water spcer was strung out resulting in a long interface which was dumped.

Survey

MD (m)	Incl Deg (deg)	Corr. Az (deg)	TVD (m)	'V' Sect (m)	Dogleg (deg/30m)	N/S (m)	E/W (m)	Tool Type
3557.20	2.26	215.08	3556.71	23.36	0.08	23.36	-27.80	MWD
3586.67	2.18	216.17	3586.15	22.43	0.09	22.43	-28.47	MWD
3700.75	2.17	212.69	3700.15	18.86	0.04	18.86	-30.92	MWD
3787.16	2.50	209.01	3786.49	15.83	0.13	15.83	-32.71	MWD
3898.83	2.70	196.27	3898.05	11.18	0.17	11.18	-34.63	MWD
3914.50	2.70	196.27	3913.70	10.47	0	10.47	-34.84	Projected to TD

Bulk Stocks

Name	Unit	In	Used	Adjust	Balance
Fuel	MT	0	11	0	819.0
Drill Water	MT	0	47	0	714.0
Potable Water	MT	0	34	0	276.0
Gel	MT	0	0	0	158.0
Cement	MT	0	28	0	169.0
Barite	MT	0	5	0	69.0

Personnel On Board

Company	Pax
Santos	5
Transocean	63
BHI	2
Halliburton	2
M.I	2
Subsea 7	3
Schlumberger Wireline	8
Dril-Quip	1
Weatherford	3
Total	89

Casing

OD	L.O.T. / F.I.T.	Csg Shoe (MD/TVD)	Cementing
30 "	0ppg / 0ppg	191.0m / 191.0m	
13 3/8"	13.20ppg / 0ppg	778.3m / 778.3m	
9 5/8"	14.72ppg / 0ppg	2537.0m / 2537.0m	

HSE Summary

Events	Date of Last	Days Since	Remarks
Abandon Drill	31 Oct 2004	11 Days	Weekly abandon rig drill.
BOP Test	28 Oct 2004	14 Days	Tested all rams etc to 250 psi low and 5000psi high.
Environmental Incident		0 Days	
Fire Drill	07 Nov 2004	4 Days	Simulated fire in mud process room
First Aid		0 Days	
Lost Time Incident		0 Days	None
Safety Meeting	07 Nov 2004	4 Days	
Stop Cards	01 Nov 2004	10 Days	7 START Cards submitted

Marine

Weather check on 11 Nov 2004 at 24:00

Visibility	Wind Speed	Wind Dir.	Pressure	Air Temp.	Wave Height	Wave Dir.	Wave Period
10.00nm	24.0kn	300deg	1004bar	14.5C°	0m	000deg	0ft/sec

Roll	Pitch	Heave	Swell Height	Swell Dir.	Swell Period	Weather Comments
0.4deg	0.4deg	0.30m	1.8m	300deg	10.0ft/sec	

Rig Dir.	Ris. Tension	VDL	Comments
216.0deg	0klb	8272.0klb	

Boats	Arrived (date/time)	Departed (date/time)	Status
Lady Astrid		22:30 09/11/04	En-route to Portland
Lady Caroline	22:30 09/11/04		Jack Bates

Bulks		
Item	**Unit**	**Quantity**
Item	**Unit**	**Quantity**

Helicopter Movement

Flight #	Time	Destination	Comment	Pax
BZU	15:36	Jack Bates		14
BZU	15:51	Essendon		13

Santos

DRILLING MORNING REPORT # 36
CALLISTER 01 (12 Nov 2004)

From : D. Atkins / P.King

Well Data

Country	Australia	M. Depth	3914.5m	Cur. Hole Size	8.500in	AFE Cost	
Field	Otway Basin	TVD	3914.5m	Casing OD	9.625in	AFE No.	
Drill Co.	Transocean	Progress	0m	Shoe TVD	2538.0m	Daily Cost	
Rig	Jack Bates	Days from spud	30.50	F.I.T. / L.O.T.	0ppg / 14.70ppg	Cum Cost	
Wtr Dpth(LAT)	129.4m	Days on well	35.94			Planned TD	3629.0m
RT-ASL(LAT)	29.0m	Current Op @ 0600	Pulling out of hole laying down drill pipe @ 827m				
RT-ML	158.4m	Planned Op	Continue to POH to 250m. Displace to 9.2 ppg. RIH and retrieve 9-5/8" wear bushing. Cut & retrieve 9-5/8" casing. RIH and set 13-3/8" bridge plug.				

Summary of Period 0000 to 2400 Hrs

POH after setting cement plug #3. Layed out 2-7/8" tubing stinger. RIH with 9-5/8" cement retainer and set at 2508m. Squeezed plug #4 and set plug #5. POH laying down drill pipe.

Operations For Period 0000 Hrs to 2400 Hrs on 12 Nov 2004

Phse	Cls (RC)	Op	From	To	Hrs	Depth	Activity Description
PA	P	TO	0000	0015	0.25	3914.5m	Continued to pull out of hole from 3303m to 3215m.
PA	P	CMD	0015	0130	1.25	3914.5m	Circulated bottoms up and conditioned mud.
PA	P	FC	0130	0145	0.25	3914.5m	Flow checked. Well static.
PA	P	CMD	0145	0200	0.25	3914.5m	Pumped heavy weight slug (16.5 ppg).
PA	P	TO	0200	0315	1.25	3914.5m	Pulled out of hole from 3215m to 2537m (~ 9-5/8" casing shoe)
PA	P	FC	0315	0330	0.25	3914.5m	Flow checked. Well static.
PA	P	TO	0330	0645	3.25	3914.5m	Continued to pull out of hole from 2537m to 249m.
PA	P	TO	0645	0700	0.25	3914.5m	Changed out to 2-7/8" tubing handling equipment.
PA	P	TO	0700	0915	2.25	3914.5m	Pulled out of hole, laying out 2-7/8" tubing in doubles from 249m.
PA	P	RPK	0915	0930	0.25	3914.5m	Changed out to 5" drill pipe handling equpment.
PA	P	RPK	0930	1000	0.50	3914.5m	Picked up 9-5/8" Halliburton EZSV cement retainer assembly and made up same.
PA	P	RPK	1000	1030	0.50	3914.5m	Ran in hole with cement retainer to 173m.
PA	TP (RE)	RPK	1030	1130	1.00	3914.5m	Serviced top drive whilst changing out hydraulic hose on retract system.
PA	P	RPK	1130	1200	0.50	3914.5m	Continued to run in hole with cement retainer from 173m to 317m.
PA	P	RPK	1200	1700	5.00	3914.5m	Continued to run in hole with cement retainer from 317m to 2510m.
PA	P	RPK	1700	1715	0.25	3914.5m	Made up cement stand and circulated.
PA	P	RPK	1715	1730	0.25	3914.5m	Set 9-5/8" Halliburton EZSV cement retainer at 2508m. Confirmed set with 50k overpull.
PA	P	CMS	1730	1800	0.50	3914.5m	Pressure tested annulus to 500 psi. (Test good) Performed formation injectivity test (3 bbl/min (30 spm) @ 850 psi) Stung out of retainer.
PA	P	CMP	1800	1830	0.50	3914.5m	Pumped 39 bbl of drillwater then tested cementing lines to 2000 psi. (Test good)
PA	P	CMP	1830	1930	1.00	3914.5m	Displaced cement, stung into retainer and bullheaded to set cement plug #4 (2508m to 2568m) across casing shoe. Pulled out of cement retainer and set cement plug #5 (2455m to 2508m) on top of retainer.
PA	P	TO	1930	2015	0.75	3914.5m	Pulled out of hole from 2508m to 2300m.
PA	P	CMD	2015	2200	1.75	3914.5m	Circulated well to 14.1 ppg inhibited mud (250m to 2300m)
PA	P	CMD	2200	2215	0.25	3914.5m	Pumped 20 bbl heavy weight slug (16.5 ppg) prior to pulling out of hole.
PA	P	TO	2215	2230	0.25	3914.5m	Changed out BX automatic elevators to manual elevators to enable lay out of 5" drill pipe.
PA	P	SM	2230	2245	0.25	3914.5m	Held toolbox meeting prior to pulling out of hole to lay out drill pipe.
PA	P	TO	2245	2400	1.25	3914.5m	Pulled out of hole from 2300m to 2141m, laying out drill pipe.

Operations For Period 0000 Hrs to 0600 Hrs on 13 Nov 2004

Phse	Cls (RC)	Op	From	To	Hrs	Depth	Activity Description
PA	P	TO	0000	0600	6.00	3914.5m	Continued to pull out of hole laying down drill pipe from 2141m to 827m.

Phase Data to 2400hrs, 12 Nov 2004

Phase	Phase Hrs	Start On	Finish On	Cum Hrs	Cum Days	Max Depth
RIG MOVE/RIG-UP(RM)	92.5	08 Oct 2004	12 Oct 2004	92.50	3.854 days	0m
PRESPUD(PS)	25	12 Oct 2004	13 Oct 2004	117.50	4.896 days	158.0m
CONDUCTOR HOLE(CH)	9.5	15 Oct 2004	15 Oct 2004	127.00	5.292 days	192.0m
SURFACE HOLE(SH)	38.75	13 Oct 2004	16 Oct 2004	165.75	6.906 days	787.5m
SURFACE CASING(SC)	55.25	13 Oct 2004	17 Oct 2004	221.00	9.208 days	787.5m
INTERMEDIATE HOLE(IH)	250	17 Oct 2004	28 Oct 2004	471.00	19.625 days	2550.0m
INTERMEDIATE CASING(IC)	14.25	28 Oct 2004	28 Oct 2004	485.25	20.219 days	2550.0m
PRODUCTION HOLE(PH)	168.5	28 Oct 2004	05 Nov 2004	653.75	27.240 days	3914.5m
EVALUATION PRODUCTION HOLE(EP)	148.25	04 Nov 2004	11 Nov 2004	802.00	33.417 days	3914.5m
PLUG AND ABANDON(PA)	46	11 Nov 2004	12 Nov 2004	848.00	35.333 days	3914.5m

WBM Data

Mud Type:	KCL/PHPA/POLYMER	API FL:	8cm³/30m	Cl:	43000	Solids:	25.5
Sample-From:	Active pit	Filter-Cake:	2/32nd"	K+C*1000:	9%	H2O:	75%
Time:	21:00	HTHP-FL:	0cm³/30m	Hard/Ca:	550	Oil:	0%
Weight:	14.10ppg	HTHP-Cake:	0/32nd"	MBT:	12	Sand:	0.5
Temp:	0C°			PM:	0	pH:	10.5
				PF:	0	PHPA:	1ppb

Viscosity:	60sec/qt
PV:	36cp
YP:	31lb/100ft²
Gels 10s:	12
Gels 10m:	37
Fann 003:	11
Fann 006:	13
Fann 100:	36
Fann 200:	51
Fann 300:	67
Fann 600:	103

Comment: No discrete cement observed when circulating from top of plugs. In each case, water spcer was strung out resulting in a long interface which was dumped.

Survey

MD (m)	Incl Deg (deg)	Corr. Az (deg)	TVD (m)	'V' Sect (m)	Dogleg (deg/30m)	N/S (m)	E/W (m)	Tool Type
3557.20	2.26	215.08	3556.71	23.36	0.08	23.36	-27.80	MWD
3586.67	2.18	216.17	3586.15	22.43	0.09	22.43	-28.47	MWD
3700.75	2.17	212.69	3700.15	18.86	0.04	18.86	-30.92	MWD
3787.16	2.50	209.01	3786.49	15.83	0.13	15.83	-32.71	MWD
3898.83	2.70	196.27	3898.05	11.18	0.17	11.18	-34.63	MWD
3914.50	2.70	196.27	3913.70	10.47	0	10.47	-34.84	Projected to TD

Bulk Stocks

Name	Unit	In	Used	Adjust	Balance
Fuel	MT	0	10	0	809.0
Drill Water	MT	0	147	0	567.0
Potable Water	MT	44	66	0	254.0
Gel	MT	0	0	0	158.0
Cement	MT	0	7	0	162.0
Barite	MT	0	7	0	62.0

Personnel On Board

Company	Pax
Santos	3
Transocean	65
BHI	2
Halliburton	2
M.I	1
Subsea 7	3
Dril-Quip	1
Weatherford	3
Fugro	2
MO47	1
ECL	5
Anadrill	2
Total	90

Casing

OD	L.O.T. / F.I.T.	Csg Shoe (MD/TVD)	Cementing
30 "	0ppg / 0ppg	191.0m / 191.0m	
13 3/8"	13.20ppg / 0ppg	778.3m / 778.3m	
9 5/8"	14.72ppg / 0ppg	2537.0m / 2537.0m	

HSE Summary

Events	Date of Last	Days Since	Remarks
Abandon Drill	31 Oct 2004	12 Days	Weekly abandon rig drill.
BOP Test	28 Oct 2004	15 Days	Tested all rams etc to 250 psi low and 5000psi high.
Environmental Incident		0 Days	
Fire Drill	07 Nov 2004	5 Days	Simulated fire in mud process room
First Aid		0 Days	
Lost Time Incident		0 Days	None
Safety Meeting	07 Nov 2004	5 Days	
Stop Cards	01 Nov 2004	11 Days	7 START Cards submitted

Marine

Weather check on 12 Nov 2004 at 24:00

Visibility	Wind Speed	Wind Dir.	Pressure	Air Temp.	Wave Height	Wave Dir.	Wave Period
10.00nm	29.0kn	285deg	1001bar	12.9C°	0m	000deg	0ft/sec

Roll	Pitch	Heave	Swell Height	Swell Dir.	Swell Period	Weather Comments
0.6deg	0.8deg	1.00m	3.7m	285deg	10.0ft/sec	

Rig Dir.	Ris. Tension	VDL	Comments
216.0deg	0klb	7937.0klb	

Boats	Arrived (date/time)	Departed (date/time)	Status	Bulks		
Lady Astrid	09:50 12/11/04		Jack Bates	**Item**	**Unit**	**Quantity**
Lady Caroline	13:15 12/11/04		Portland	**Item**	**Unit**	**Quantity**

Helicopter Movement

Flight #	Time	Destination	Comment	Pax
BHI	12:42	Jack Bates		4
BHI	12:53	Essendon		8
BZU	15:46	Jack Bates		15
BZU	16:01	Essendon		10

Santos

DRILLING MORNING REPORT # 37
CALLISTER 01 (13 Nov 2004)

From : D. Atkins / P.King

Well Data

Country	Australia	M. Depth	3914.5m	Cur. Hole Size	8.500in	AFE Cost	
Field	Otway Basin	TVD	3914.5m	Casing OD	9.625in	AFE No.	
Drill Co.	Transocean	Progress	0m	Shoe TVD	2538.0m	Daily Cost	
Rig	Jack Bates	Days from spud	31.50	F.I.T. / L.O.T.	0ppg / 14.70ppg	Cum Cost	
Wtr Dpth(LAT)	129.4m	Days on well	36.94			Planned TD	3629.0m
RT-ASL(LAT)	29.0m	Current Op @ 0600	Rigging up to pull riser and BOPs.				
RT-ML	158.4m	Planned Op	Rig up to pull riser and BOPs. Commence pulling riser and BOPs.				

Summary of Period 0000 to 2400 Hrs

Pulled out of hole laying down drill pipe after setting cement plug #5. Retrieved 9-5/8" wear bushing. Cut and retrieved 9-5/8" casing. Commenced RIH to set 13-3/8" bridge plug.

Operations For Period 0000 Hrs to 2400 Hrs on 13 Nov 2004

Phse	Cls (RC)	Op	From	To	Hrs	Depth	Activity Description
PA	P	TO	0000	0645	6.75	3914.5m	Continued to pull out of hole laying down drill pipe from 2141m to 600m.
PA	P	SM	0645	0700	0.25	3914.5m	Held toolbox meeting with new crew.
PA	P	TO	0700	0900	2.00	3914.5m	Continued to pull out of hole laying down drill pipe from 600m to 259m
PA	P	TI	0900	1045	1.75	3914.5m	Ran in hole with 6-1/2" drill collars from 259m to 400m.
PA	P	PLD	1045	1200	1.25	3914.5m	Layed out 6-1/2" drill collars from 400m to 330m.
PA	P	PLD	1200	1315	1.25	3914.5m	Continued to lay out drill collars from 330m to 259m.
PA	P	CMD	1315	1415	1.00	3914.5m	Displaced well to 9.1 ppg mud from 250m to surface. Also displaced choke & kill lines (~ 200 bbl)
PA	P	RPK	1415	1445	0.50	3914.5m	Pulled out of hole from 259m to surface and layed out EZSV retainer running tool.
PA	P	WH	1445	1500	0.25	3914.5m	Picked up and made up Dril-Quip Multi Purpose Tool to retrieve 9-5/8" wear bushing.
PA	P	WH	1500	1545	0.75	3914.5m	Ran in hole and engaged wear bushing @ 155m.
PA	P	WH	1545	1615	0.50	3914.5m	Took 30,000 lb overpull and pulled out of hole with wear bushing. Layed out wear bushing. (Should take 60,000 lb to shear - possibly not fully set when run)
PA	P	CRF	1615	1630	0.25	3914.5m	Cleared rig floor of excess equipment.
PA	P	CCT	1630	1700	0.50	3914.5m	Picked up and made up 9-5/8" Weatherford MOST casing cutting assembly. Tested cutters.
PA	P	CCT	1700	1800	1.00	3914.5m	Ran in hole with assembly to 248m.
PA	P	CCT	1800	1815	0.25	3914.5m	Land out and cut 9-5/8" casing at 248m.
PA	P	CPL	1815	1830	0.25	3914.5m	Flow checked. Well static. Pulled 80,000 lb over string weight with no movement. Slacked off then pulled 100,000 lb over string weight and string came free.
PA	P	CPL	1830	1930	1.00	3914.5m	Pulled out of hole with 9-5/8" casing on retrieval spear from 248m to surface.
PA	P	CPL	1930	2100	1.50	3914.5m	Installed 'C' plate and layed out casing cutting/retrieval assembly
PA	P	CRF	2100	2130	0.50	3914.5m	Cleared rig floor of excess handling equipment and spear assembly.
PA	P	CPL	2130	2300	1.50	3914.5m	Pulled out of hole and layed out casing hanger, 7 full joints and partial joint.
PA	P	CPL	2300	2315	0.25	3914.5m	Rigged down casing handling equipment.
PA	P	RPK	2315	2400	0.75	3914.5m	Picked up and made up 13-3/8" Halliburton EZSV Cement Retainer (c/w bridge plug conversion kit) and ran in hole to 145m filling each stand.

Operations For Period 0000 Hrs to 0600 Hrs on 14 Nov 2004

Phse	Cls (RC)	Op	From	To	Hrs	Depth	Activity Description
PA	P	RPK	0000	0045	0.75	3914.5m	Continued to run in hole with bridge plug from 145m to 235m filling each stand.
PA	P	RPK	0045	0100	0.25	3914.5m	Set cement retainer at 235m. (45 turns to set) Pulled 50,000 lb to shear release running tool. Confirmed bridge plug set with 10,000 lb set down weight.
PA	P	CMD	0100	0145	0.75	3914.5m	Displaced well to seawater. Also displaced choke, kill and riser boost lines to seawater.
PA	P	RPK	0145	0200	0.25	3914.5m	Closed annular for pressure test. Pressure tested bridge plug to 500 psi for 5 minutes. Test good.
PA	P	RUC	0200	0230	0.50	3914.5m	Racked back top stand and made up cement stand.
PA	P	CMP	0230	0315	0.75	3914.5m	Set cement plug #6 (185m to 235m). Pumped 4 bbl drillwater and pressure tested cement lines to 2000psi. Pumped 4 bbl drillwater and 25 bbl 15.8 ppg class G cement slurry. Displaced with 1 bbl freshwater followed by 6 bbl seawater.
PA	P	CMP	0315	0330	0.25	3914.5m	Racked back cement stand and pulled out of hole to 183m.
PA	P	CHC	0330	0345	0.25	3914.5m	Circulated hole clean.
PA	P	TO	0345	0415	0.50	3914.5m	Pulled out of hole from 183m to surface. Broke out and layed down bridge plug running tool.

Phse	Cls (RC)	Op	From	To	Hrs	Depth	Activity Description
PA	P	PLD	0415	0530	1.25	3914.5m	Broke out 8-1/2" Bit#6 RR and roller reamers (x2) and layed out last stand of 6-1/2" drill collars.
PA	P	CRF	0530	0545	0.25	3914.5m	Cleared rig floor of excess equipment.
PA	P	RR2	0545	0600	0.25	3914.5m	Commenced rigging up to pull riser and BOPs.

Phase Data to 2400hrs, 13 Nov 2004

Phase	Phase Hrs	Start On	Finish On	Cum Hrs	Cum Days	Max Depth
RIG MOVE/RIG-UP(RM)	92.5	08 Oct 2004	12 Oct 2004	92.50	3.854 days	0m
PRESPUD(PS)	25	12 Oct 2004	13 Oct 2004	117.50	4.896 days	158.0m
CONDUCTOR HOLE(CH)	9.5	15 Oct 2004	15 Oct 2004	127.00	5.292 days	192.0m
SURFACE HOLE(SH)	38.75	13 Oct 2004	16 Oct 2004	165.75	6.906 days	787.5m
SURFACE CASING(SC)	55.25	13 Oct 2004	17 Oct 2004	221.00	9.208 days	787.5m
INTERMEDIATE HOLE(IH)	250	17 Oct 2004	28 Oct 2004	471.00	19.625 days	2550.0m
INTERMEDIATE CASING(IC)	14.25	28 Oct 2004	28 Oct 2004	485.25	20.219 days	2550.0m
PRODUCTION HOLE(PH)	168.5	28 Oct 2004	05 Nov 2004	653.75	27.240 days	3914.5m
EVALUATION PRODUCTION HOLE(EP)	148.25	04 Nov 2004	11 Nov 2004	802.00	33.417 days	3914.5m
PLUG AND ABANDON(PA)	70	11 Nov 2004	13 Nov 2004	872.00	36.333 days	3914.5m

General Comments

Comments	Rig Requirements	Lessons Learnt
Lower pipe racker arm inoperable since approx. 17:00 13/11/04 Attempted to medivac Transocean employee due to illness. Air ambulance unable to reach rig due to weather conditions. Medivac to be undertaken at first light 14/11/04.		

WBM Data

Mud Type:	KCL/PHPA/POLYMER	API FL:	8cm³/30m	Cl:	43000	Solids:	25.5	Viscosity:	60sec/qt
Sample-From:	Active pit	Filter-Cake:	2/32nd"	K+C*1000:	9%	H2O:	75%	PV:	36cp
Time:	21:00	HTHP-FL:	0cm³/30m	Hard/Ca:	550	Oil:	0%	YP:	31lb/100ft²
Weight:	14.10ppg	HTHP-Cake:	0/32nd"	MBT:	12	Sand:	0.5	Gels 10s:	12
Temp:	0C°			PM:	0	pH:	10.5	Gels 10m:	37
				PF:	0	PHPA:	1ppb	Fann 003:	11
								Fann 006:	13
								Fann 100:	36
								Fann 200:	51
								Fann 300:	67
								Fann 600:	103

Survey

MD (m)	Incl Deg (deg)	Corr. Az (deg)	TVD (m)	'V' Sect (m)	Dogleg (deg/30m)	N/S (m)	E/W (m)	Tool Type
3557.20	2.26	215.08	3556.71	23.36	0.08	23.36	-27.80	MWD
3586.67	2.18	216.17	3586.15	22.43	0.09	22.43	-28.47	MWD
3700.75	2.17	212.69	3700.15	18.86	0.04	18.86	-30.92	MWD
3787.16	2.50	209.01	3786.49	15.83	0.13	15.83	-32.71	MWD
3898.83	2.70	196.27	3898.05	11.18	0.17	11.18	-34.63	MWD
3914.50	2.70	196.27	3913.70	10.47	0	10.47	-34.84	Projected to TD

Bulk Stocks

Name	Unit	In	Used	Adjust	Balance
Fuel	MT	0	10	0	799.0
Drill Water	MT	0	26	0	541.0
Potable Water	MT	0	14	0	240.0
Gel	MT	0	0	0	158.0
Cement	MT	0	0	0	162.0
Barite	MT	0	0	0	62.0

Personnel On Board

Company	Pax
Santos	3
Transocean	65
BHI	2
Halliburton	2
M.I	1
Subsea 7	3
Dril-Quip	1
Weatherford	3
Fugro	2
MO47	1
ECL	5
Anadrill	2
Total	90

Casing

OD	L.O.T. / F.I.T.	Csg Shoe (MD/TVD)	Cementing
30 "	0ppg / 0ppg	191.0m / 191.0m	
13 3/8"	13.20ppg / 0ppg	778.3m / 778.3m	
9 5/8"	14.72ppg / 0ppg	2537.0m / 2537.0m	

HSE Summary

Events	Date of Last	Days Since	Remarks
Abandon Drill	13 Nov 2004	0 Days	Weekly abandon rig drill.
BOP Test	28 Oct 2004	16 Days	Tested all rams etc to 250 psi low and 5000psi high.
Environmental Incident		0 Days	
Fire Drill	07 Nov 2004	6 Days	Simulated fire in mud process room
First Aid		0 Days	
Lost Time Incident		0 Days	None
Safety Meeting	07 Nov 2004	6 Days	
Stop Cards	01 Nov 2004	12 Days	7 START Cards submitted

Marine

Weather check on 13 Nov 2004 at 24:00

Visibility	Wind Speed	Wind Dir.	Pressure	Air Temp.	Wave Height	Wave Dir.	Wave Period
10.00nm	35.0kn	280deg	1008bar	13.5C°	0m	000deg	0ft/sec

Roll	Pitch	Heave	Swell Height	Swell Dir.	Swell Period	Weather Comments
1.0deg	1.1deg	3.00m	4.6m	280deg	9.0ft/sec	

Rig Dir.	Ris. Tension	VDL	Comments
216.0deg	0klb	7485.0klb	

Boats	Arrived (date/time)	Departed (date/time)	Status	Bulks		
Lady Astrid	09:50 12/11/04		Jack Bates	**Item**	**Unit**	**Quantity**
Lady Caroline	11:00 13/11/04		Jack Bates	**Item**	**Unit**	**Quantity**

Santos

DRILLING MORNING REPORT # 38
CALLISTER 01 (14 Nov 2004)

From : D. Atkins / P.King

Well Data

Country	Australia	M. Depth	3914.5m	Cur. Hole Size	8.500in	AFE Cost	
Field	Otway Basin	TVD	3914.5m	Casing OD	9.625in	AFE No.	
Drill Co.	Transocean	Progress	0m	Shoe TVD	2538.0m	Daily Cost	
Rig	Jack Bates	Days from spud	32.50	F.I.T. / L.O.T.	0ppg / 14.70ppg	Cum Cost	
Wtr Dpth(LAT)	129.4m	Days on well	37.94			Planned TD	3629.0m
RT-ASL(LAT)	29.0m	Current Op @ 0600	Removing drape hoses from riser in moonpool.				
RT-ML	158.4m	Planned Op	Retrieve and layout riser. Rig down riser & BOP handling equipment. RIH with 13-3/8" casing cutting / pulling assembly and retrieve 13-3/8" & 30" casings, 18-3/4" wellhead and PGB. ROV sea bed survey. Commence pulling anchors.				

Summary of Period 0000 to 2400 Hrs

Set cement retainer @ 235m. Set cement plug #6. Rigged up to retrieve riser and BOPs.

Operations For Period 0000 Hrs to 2400 Hrs on 14 Nov 2004

Phse	Cls (RC)	Op	From	To	Hrs	Depth	Activity Description
PA	P	RPK	0000	0045	0.75	3914.5m	Continued to run in hole with 13-3/8" Halliburton EZSV bridge plug from 145m to 235m filling each stand.
PA	P	RPK	0045	0100	0.25	3914.5m	Set bridge plug at 235m. (45 turns to set) Pulled 50,000 lb to shear release running tool. Confirmed bridge plug set with 10,000 lb set down weight.
PA	P	CMD	0100	0145	0.75	3914.5m	Displaced well to seawater. Also displaced choke, kill and riser boost lines to seawater.
PA	P	RPK	0145	0200	0.25	3914.5m	Closed annular for pressure test. Pressure tested bridge plug to 500 psi for 5 minutes. Test good.
PA	P	RUC	0200	0230	0.50	3914.5m	Racked back top stand and made up cement stand.
PA	P	CMP	0230	0315	0.75	3914.5m	Set cement plug #6 (185m to 235m). Pumped 4 bbl drillwater and pressure tested cement lines to 2000psi. Pumped 4 bbl drillwater and 25 bbl 15.8 ppg class G cement slurry. Displaced with 1 bbl freshwater followed by 6 bbl seawater.
PA	P	CMP	0315	0330	0.25	3914.5m	Racked back cement stand and pulled out of hole to 183m.
PA	P	CHC	0330	0345	0.25	3914.5m	Circulated hole clean.
PA	P	TO	0345	0415	0.50	3914.5m	Pulled out of hole from 183m to surface. Broke out and layed down bridge plug running tool.
PA	P	PLD	0415	0530	1.25	3914.5m	Broke out 8-1/2" Bit#6 RR and roller reamers (x2) and layed out last stand of 6-1/2" drill collars.
PA	P	CRF	0530	0545	0.25	3914.5m	Cleared rig floor of excess equipment.
PA	P	RR2	0545	0900	3.25	3914.5m	Commenced rigging up to pull riser and BOPs.
PA	TP (WOW)	RR2	0900	1030	1.50	3914.5m	Rigged down riser handling equipment. (Insufficient deck capacity for riser and BOPs until surplus equipment offloaded onto supply vessel. Vessel had been unable to come along side rig since Friday 12th due to adverse weather conditions)
PA	TP (WOW)	RR2	1030	1100	0.50	3914.5m	Wait on weather to backload equipment. Rigged up handling equipment for BHA.
PA	TP (WOW)	RR2	1100	1130	0.50	3914.5m	Cleared rig floor of excess equipment.
PA	TP (WOW)	RR2	1130	1200	0.50	3914.5m	Wait on weather to backload equipment. Re-arranged collars in derrick to access cement stand. Picked up and layed out same.
PA	TP (WOW)	RR2	1200	1230	0.50	3914.5m	Wait on weather to backload equipment. Continued laying out cement stand.
PA	TP (WOW)	RR2	1230	1245	0.25	3914.5m	Wait on weather to backload equipment. Held toolbox meeting prior to making up 26" BHA for next well.
PA	TP (WOW)	RR2	1245	1700	4.25	3914.5m	Wait on weather to backload equipment. Made up 26" BHA and racked back in derrick. (Weather window 15:00 - 17:00 enabled backload of drill pipe, drill collars and other excess equipment to Portland to reduce deck load)
PA	P	RR2	1700	2100	4.00	3914.5m	Rigged up to pull riser and BOP, whilst re-arranging equipment on deck to make room for riser.
PA	P	RR2	2100	2230	1.50	3914.5m	Picked up diverter running tool and locked in. Retrieved diverter and layed out same.
PA	P	RR2	2230	2300	0.50	3914.5m	Rigged up and installed hydraulic lifting nubbin for landing string and function tested same.
PA	P	RR2	2300	2330	0.50	3914.5m	Spotted and secured landing joint w/ hydraulic lifting nubbin on dodge truck.
PA	P	RR2	2330	2400	0.50	3914.5m	Picked up landing joint and made up same to slip joint. Collapsed slip joint and secured in the closed position.

Operations For Period 0000 Hrs to 0600 Hrs on 15 Nov 2004

Phse	Cls (RC)	Op	From	To	Hrs	Depth	Activity Description
PA	P	RR2	0000	0100	1.00	3914.5m	Engaged mechanical locks to secure slip joint and set up compensator to pull BOP.
PA	P	BOP	0100	0200	1.00	3914.5m	Un-latched BOP (observed on ROV) and skidded rig to safe handling area whilst locking up compensator. Once BOPs clear of guidebase, hot stabbed ROV to actuate 30" Hydraulic Abandonment Connector (Dril-Quip HAC). Fluid released from vents and hydraulic pressure increased indicating HAC release.
PA	P	BOP	0200	0300	1.00	3914.5m	Picked up BOP and secured load ring under rotary table.
PA	P	RR2	0300	0400	1.00	3914.5m	Pulled and lay out riser landing joint and slip joint.
PA	P	RR2	0400	0600	2.00	3914.5m	Removed drape hoses in moonpool.

Phase Data to 2400hrs, 14 Nov 2004

Phase	Phase Hrs	Start On	Finish On	Cum Hrs	Cum Days	Max Depth
RIG MOVE/RIG-UP(RM)	92.5	08 Oct 2004	12 Oct 2004	92.50	3.854 days	0m
PRESPUD(PS)	25	12 Oct 2004	13 Oct 2004	117.50	4.896 days	158.0m
CONDUCTOR HOLE(CH)	9.5	15 Oct 2004	15 Oct 2004	127.00	5.292 days	192.0m
SURFACE HOLE(SH)	38.75	13 Oct 2004	16 Oct 2004	165.75	6.906 days	787.5m
SURFACE CASING(SC)	55.25	13 Oct 2004	17 Oct 2004	221.00	9.208 days	787.5m
INTERMEDIATE HOLE(IH)	250	17 Oct 2004	28 Oct 2004	471.00	19.625 days	2550.0m
INTERMEDIATE CASING(IC)	14.25	28 Oct 2004	28 Oct 2004	485.25	20.219 days	2550.0m
PRODUCTION HOLE(PH)	168.5	28 Oct 2004	05 Nov 2004	653.75	27.240 days	3914.5m
EVALUATION PRODUCTION HOLE(EP)	148.25	04 Nov 2004	11 Nov 2004	802.00	33.417 days	3914.5m
PLUG AND ABANDON(PA)	94	11 Nov 2004	14 Nov 2004	896.00	37.333 days	3914.5m

Survey

MD (m)	Incl Deg (deg)	Corr. Az (deg)	TVD (m)	'V' Sect (m)	Dogleg (deg/30m)	N/S (m)	E/W (m)	Tool Type
3557.20	2.26	215.08	3556.71	23.36	0.08	23.36	-27.80	MWD
3586.67	2.18	216.17	3586.15	22.43	0.09	22.43	-28.47	MWD
3700.75	2.17	212.69	3700.15	18.86	0.04	18.86	-30.92	MWD
3787.16	2.50	209.01	3786.49	15.83	0.13	15.83	-32.71	MWD
3898.83	2.70	196.27	3898.05	11.18	0.17	11.18	-34.63	MWD
3914.50	2.70	196.27	3913.70	10.47	0	10.47	-34.84	Projected to TD

Bulk Stocks

Name	Unit	In	Used	Adjust	Balance
Fuel	MT	0	11	0	788.0
Drill Water	MT	0	19	0	522.0
Potable Water	MT	0	32	0	208.0
Gel	MT	0	0	0	158.0
Cement	MT	0	0	0	162.0
Barite	MT	0	0	0	62.0

Personnel On Board

Company	Pax
Santos	3
Transocean	63
BHI	2
Halliburton	2
M.I	1
Subsea 7	3
Dril-Quip	1
Weatherford	3
Fugro	2
MO47	1
ECL	5
Anadrill	2
Total	88

Casing

OD	L.O.T. / F.I.T.	Csg Shoe (MD/TVD)	Cementing
30 "	0ppg / 0ppg	191.0m / 191.0m	
13 3/8"	13.20ppg / 0ppg	778.3m / 778.3m	
9 5/8"	14.72ppg / 0ppg	2537.0m / 2537.0m	

HSE Summary

Events	Date of Last	Days Since	Remarks
Abandon Drill	13 Nov 2004	1 Day	Weekly abandon rig drill.
BOP Test	28 Oct 2004	17 Days	Tested all rams etc to 250 psi low and 5000psi high.
Environmental Incident		0 Days	
Fire Drill	07 Nov 2004	7 Days	Simulated fire in mud process room
First Aid		0 Days	
Lost Time Incident		0 Days	None
Safety Meeting	07 Nov 2004	7 Days	
Stop Cards	01 Nov 2004	13 Days	7 START Cards submitted

Marine

Weather check on 14 Nov 2004 at 24:00

Visibility	Wind Speed	Wind Dir.	Pressure	Air Temp.	Wave Height	Wave Dir.	Wave Period
10.00nm	25.0kn	270deg	1012bar	14.0C°	0m	000deg	0ft/sec

Roll	Pitch	Heave	Swell Height	Swell Dir.	Swell Period	Weather Comments
0.5deg	0.5deg	1.00m	3.7m	270deg	10.0ft/sec	

Rig Dir.	Ris. Tension	VDL	Comments
216.0deg	0klb	7042.0klb	

Boats	Arrived (date/time)	Departed (date/time)	Status	Bulks		
Lady Astrid		17:10 14/11/04	Portland	**Item**	**Unit**	**Quantity**
Lady Caroline	11:00 13/11/04		Jack Bates	**Item**	**Unit**	**Quantity**

Helicopter Movement

Flight #	Time	Destination	Comment	Pax
PVG	06:43	Jack Bates	Medivac of Transocean Employee	0
PVG	07:42	Geelong	Transocean employee accompanied to Geelong by RSTC	2

Santos

DRILLING MORNING REPORT # 39
CALLISTER 01 (15 Nov 2004)

From : D. Atkins / J.Young

Well Data

Country	Australia	M. Depth	3914.5m	Cur. Hole Size	8.500in	AFE Cost	
Field	Otway Basin	TVD	3914.5m	Casing OD	9.625in	AFE No.	
Drill Co.	Transocean	Progress	0m	Shoe TVD	2538.0m	Daily Cost	
Rig	Jack Bates	Days from spud	33.50	F.I.T. / L.O.T.	0ppg / 14.70ppg	Cum Cost	
Wtr Dpth(LAT)	129.4m	Days on well	38.94			Planned TD	3629.0m
RT-ASL(LAT)	29.0m	Current Op @ 0600	Removing PGB and from Moonpool area and replacing with new GRA.				
RT-ML	158.4m	Planned Op	Deballast rig and pull anchors				

Summary of Period 0000 to 2400 Hrs

Pulled Riser and BOP's. Cut and retrieved casing.

Operations For Period 0000 Hrs to 2400 Hrs on 15 Nov 2004

Phse	Cls (RC)	Op	From	To	Hrs	Depth	Activity Description
PA	P	RR2	0000	0100	1.00	3914.5m	Engaged mechanical locks to secure slip joint and set up compensator to pull BOP.
PA	P	BOP	0100	0200	1.00	3914.5m	Un-latched BOP (observed on ROV) and skidded rig to safe handling area whilst locking up compensator. Once BOPs clear of guidebase, hot stabbed ROV to actuate 30" Hydraulic Abandonment Connector (Dril-Quip HAC). Fluid released from vents and hydraulic pressure increased indicating HAC release.
PA	P	BOP	0200	0300	1.00	3914.5m	Picked up BOP and secured load ring under rotary table.
PA	P	RR2	0300	0400	1.00	3914.5m	Pulled and lay out riser landing joint and slip joint.
PA	P	RR2	0400	0630	2.50	3914.5m	Removed drape hoses in moonpool.
PA	P	RR2	0630	0700	0.50	3914.5m	Pulled and laid out 50 ft spacer and flex joints.
PA	P	SM	0700	0715	0.25	3914.5m	Held toolbox meeting with incoming crew prior to pulling riser.
PA	P	RR2	0715	0930	2.25	3914.5m	Pulled and laid out riser from 110m - 30m.
PA	P	RR2	0930	1115	1.75	3914.5m	Pulled BOP's through splash zone and landed on transporter. Disconnected two riser joints and skidded BOP's into the deepwell.
PA	P	RR2	1115	1530	4.25	3914.5m	Broke out and laid out double joint of riser. Rigged down riser handling equipment and clear rig floor.
PA	P	WH	1530	1615	0.75	3914.5m	Made up and racked back the 18-3/4" wellhead running tool.
PA	P	CCT	1615	1830	2.25	3914.5m	Made up the 13-3/8" casing cutting assembly and function tested motor and casing cutters. RIH casing cutter assembly drill pipe to 3m above wellhead.
PA	P	CCT	1830	2000	1.50	3914.5m	Stabbed cutting assembly into wellhead and engauged "MOST" tool. Cut casing whilst observing with the ROV. Pulled 150k over string weight and to release casing.
PA	TP (WOW)	AH	2000	2130	1.50	3914.5m	WOW to deballast rig. POOH with PGB and cut casing from 156m - 25m. Landed and secured PGB on transporter in moonpool. ROV conducted seabed survey - all clear.
PA	P (WOW)	AH	2130	2330	2.00	3914.5m	WOW to deballast rig. Released the "MOST" tool from the wellhead and laid out casing cutting assembly.
PA	P (WOW)	AH	2330	2400	0.50	3914.5m	WOW to deballast rig. Ran DrilQuip wellhead running tool through to the moonpool and latched into the wellhead (5 turns to the left).

Operations For Period 0000 Hrs to 0600 Hrs on 16 Nov 2004

Phse	Cls (RC)	Op	From	To	Hrs	Depth	Activity Description
PA	P (WOW)	AH	0000	0315	3.25	3914.5m	WOW to deballast rig. Pulled wellhead up to the rig floor and disconnected and laid out the 18-3/4" high pressure housing from the 30" low pressure housing.
PA	P (WOW)	AH	0315	0400	0.75	3914.5m	WOW to deballast rig. Laid out the 30" low pressure housing.
PA	P (WOW)	AH	0400	0430	0.50	3914.5m	WOW to deballast rig. Cleared rig floor of all excess equipment.
PA	P (WOW)	AH	0430	0600	1.50	3914.5m	WOW to deballast rig. Removed PGB and put the new GRA down in the moonpool area.

Phase Data to 2400hrs, 15 Nov 2004

Phase	Phase Hrs	Start On	Finish On	Cum Hrs	Cum Days	Max Depth
RIG MOVE/RIG-UP(RM)	92.5	08 Oct 2004	12 Oct 2004	92.50	3.854 days	0m
PRESPUD(PS)	25	12 Oct 2004	13 Oct 2004	117.50	4.896 days	158.0m
CONDUCTOR HOLE(CH)	9.5	15 Oct 2004	15 Oct 2004	127.00	5.292 days	192.0m
SURFACE HOLE(SH)	38.75	13 Oct 2004	16 Oct 2004	165.75	6.906 days	787.5m
SURFACE CASING(SC)	55.25	13 Oct 2004	17 Oct 2004	221.00	9.208 days	787.5m
INTERMEDIATE HOLE(IH)	250	17 Oct 2004	28 Oct 2004	471.00	19.625 days	2550.0m
INTERMEDIATE CASING(IC)	14.25	28 Oct 2004	28 Oct 2004	485.25	20.219 days	2550.0m
PRODUCTION HOLE(PH)	168.5	28 Oct 2004	05 Nov 2004	653.75	27.240 days	3914.5m
EVALUATION PRODUCTION HOLE(EP)	148.25	04 Nov 2004	11 Nov 2004	802.00	33.417 days	3914.5m
PLUG AND ABANDON(PA)	118	11 Nov 2004	15 Nov 2004	920.00	38.333 days	3914.5m

Survey

MD (m)	Incl Deg (deg)	Corr. Az (deg)	TVD (m)	'V' Sect (m)	Dogleg (deg/30m)	N/S (m)	E/W (m)	Tool Type
3557.20	2.26	215.08	3556.71	23.36	0.08	23.36	-27.80	MWD
3586.67	2.18	216.17	3586.15	22.43	0.09	22.43	-28.47	MWD
3700.75	2.17	212.69	3700.15	18.86	0.04	18.86	-30.92	MWD
3787.16	2.50	209.01	3786.49	15.83	0.13	15.83	-32.71	MWD
3898.83	2.70	196.27	3898.05	11.18	0.17	11.18	-34.63	MWD
3914.50	2.70	196.27	3913.70	10.47	0	10.47	-34.84	Projected to TD

Bulk Stocks

Name	Unit	In	Used	Adjust	Balance
Fuel	MT	0	7	0	781.0
Drill Water	MT	0	14	0	508.0
Potable Water	MT	75	18	0	265.0
Gel	MT	0	0	0	158.0
Cement	MT	0	0	0	162.0
Barite	MT	0	0	0	62.0

Personnel On Board

Company	Pax
Santos	3
Transocean	65
BHI	2
Halliburton	2
M.I	2
Subsea 7	3
Dril-Quip	2
Weatherford	3
Fugro	2
MO47	5
ECL	1
Anadrill	3
Total	93

Casing

OD	L.O.T. / F.I.T.	Csg Shoe (MD/TVD)	Cementing
30 "	0ppg / 0ppg	191.0m / 191.0m	
13 3/8"	13.20ppg / 0ppg	778.3m / 778.3m	
9 5/8"	14.72ppg / 0ppg	2537.0m / 2537.0m	

HSE Summary

Events	Date of Last	Days Since	Remarks
Abandon Drill	14 Nov 2004	1 Day	Weekly abandon rig drill.
BOP Test	28 Oct 2004	18 Days	Tested all rams etc to 250 psi low and 5000psi high.
Environmental Incident		0 Days	
Fire Drill	14 Nov 2004	1 Day	Simulated fire in mud pump room
First Aid		0 Days	
Lost Time Incident		0 Days	None
Safety Meeting	14 Nov 2004	1 Day	
Stop Cards	15 Nov 2004	0 Days	3 START Cards submitted

Marine

Weather check on 15 Nov 2004 at 24:00

Visibility	Wind Speed	Wind Dir.	Pressure	Air Temp.	Wave Height	Wave Dir.	Wave Period
10.00nm	12.0kn	255deg	1017bar	12.7C°	0m	000deg	0ft/sec

Roll	Pitch	Heave	Swell Height	Swell Dir.	Swell Period	Weather Comments
0.8deg	1.1deg	3.00m	3.0m	255deg	10.0ft/sec	

Rig Dir.	Ris. Tension	VDL	Comments
216.0deg	0klb	7835.0klb	

Boats	Arrived (date/time)	Departed (date/time)	Status	Bulks		
Lady Astrid		17:10 14/11/04	Portland	**Item**	**Unit**	**Quantity**
Lady Caroline	11:00 13/11/04		Jack Bates	**Item**	**Unit**	**Quantity**

Santos

DRILLING MORNING REPORT # 40
CALLISTER 01 (16 Nov 2004)

From : D. Atkins / J.Young

Well Data

Country	Australia	M. Depth	3914.5m	Cur. Hole Size	8.500in	AFE Cost	
Field	Otway Basin	TVD	3914.5m	Casing OD	9.625in	AFE No.	
Drill Co.	Transocean	Progress	0m	Shoe TVD	2538.0m	Daily Cost	
Rig	Jack Bates	Days from spud	34.50	F.I.T. / L.O.T.	0ppg / 14.70ppg	Cum Cost	
Wtr Dpth(LAT)	129.4m	Days on well	39.94			Planned TD	3629.0m
RT-ASL(LAT)	29.0m	Current Op @ 0600	END OF CALLISTER-1 AT 04:00				
RT-ML	158.4m	Planned Op					

Summary of Period 0000 to 2400 Hrs

Laid out cut casing and wellhead. Deballasted rig. Pulled Anchors.

Operations For Period 0000 Hrs to 2400 Hrs on 16 Nov 2004

Phse	Cls (RC)	Op	From	To	Hrs	Depth	Activity Description
PA	P (WOW)	AH	0000	0315	3.25	3914.5m	WOW to deballast rig. Pulled wellhead up to the rig floor and disconnected and laid out the 18-3/4" high pressure housing from the 30" low pressure housing.
PA	P (WOW)	AH	0315	0400	0.75	3914.5m	WOW to deballast rig. Laid out the 30" low pressure housing.
PA	P (WOW)	AH	0400	0430	0.50	3914.5m	WOW to deballast rig. Cleared rig floor of all excess equipment.
PA	P (WOW)	AH	0430	0615	1.75	3914.5m	WOW to deballast rig. Removed PGB and put the new GRA down in the moonpool area.
PA	P	AH	0615	0700	0.75	3914.5m	Began deballasting rig Continued to removed PGB and put the new GRA down in the moonpool area.
PA	P	AH	0700	1400	7.00	3914.5m	Deballasted Rig. Secured rig and equipment in preperation of rig move.
PA	P	AH	1400	2400	10.00	3914.5m	Pulled Rig Anchors. Anchor #6: 14:06 - 18:45 Anchor #2: 14:27 - 16:40 Anchor #3: 17:10 - 18:52 Anchor #7: 19:20 - 21:08 Anchor #4: 19:58 - 21:17 Anchor #8: 21:35 - 24:00 22:35 - Tow bridle passed to Lady Astrid

Operations For Period 0000 Hrs to 0600 Hrs on 17 Nov 2004

Phse	Cls (RC)	Op	From	To	Hrs	Depth	Activity Description
PA	P	AH	0000	0400	4.00	3914.5m	Pulled Rig Anchors. Anchor #1: 00:24 - 01:55 Anchor #5: 02:26 - 04:00 END OF CALLISTER-1

Phase Data to 2400hrs, 16 Nov 2004

Phase	Phase Hrs	Start On	Finish On	Cum Hrs	Cum Days	Max Depth
RIG MOVE/RIG-UP(RM)	92.5	08 Oct 2004	12 Oct 2004	92.50	3.854 days	0m
PRESPUD(PS)	25	12 Oct 2004	13 Oct 2004	117.50	4.896 days	158.0m
CONDUCTOR HOLE(CH)	9.5	15 Oct 2004	15 Oct 2004	127.00	5.292 days	192.0m
SURFACE HOLE(SH)	38.75	13 Oct 2004	16 Oct 2004	165.75	6.906 days	787.5m
SURFACE CASING(SC)	55.25	13 Oct 2004	17 Oct 2004	221.00	9.208 days	787.5m
INTERMEDIATE HOLE(IH)	250	17 Oct 2004	28 Oct 2004	471.00	19.625 days	2550.0m
INTERMEDIATE CASING(IC)	14.25	28 Oct 2004	28 Oct 2004	485.25	20.219 days	2550.0m
PRODUCTION HOLE(PH)	168.5	28 Oct 2004	05 Nov 2004	653.75	27.240 days	3914.5m
EVALUATION PRODUCTION HOLE(EP)	148.25	04 Nov 2004	11 Nov 2004	802.00	33.417 days	3914.5m
PLUG AND ABANDON(PA)	142	11 Nov 2004	16 Nov 2004	944.00	39.333 days	3914.5m

Survey

MD (m)	Incl Deg (deg)	Corr. Az (deg)	TVD (m)	'V' Sect (m)	Dogleg (deg/30m)	N/S (m)	E/W (m)	Tool Type
3557.20	2.26	215.08	3556.71	23.36	0.08	23.36	-27.80	MWD
3586.67	2.18	216.17	3586.15	22.43	0.09	22.43	-28.47	MWD
3700.75	2.17	212.69	3700.15	18.86	0.04	18.86	-30.92	MWD
3787.16	2.50	209.01	3786.49	15.83	0.13	15.83	-32.71	MWD
3898.83	2.70	196.27	3898.05	11.18	0.17	11.18	-34.63	MWD
3914.50	2.70	196.27	3913.70	10.47	0	10.47	-34.84	Projected to TD

Bulk Stocks

Name	Unit	In	Used	Adjust	Balance
Fuel	MT	0	5	0	776.0
Drill Water	MT	0	2	0	506.0
Potable Water	MT	0	29	0	236.0
Gel	MT	0	0	0	158.0
Cement	MT	0	5	0	157.0
Barite	MT	0	0	0	62.0

Personnel On Board

Company	Pax
Santos	3
Transocean	65
BHI	2
Halliburton	2
M.I	2
Subsea 7	3
Dril-Quip	2
Weatherford	3
Fugro	2
MO47	5
ECL	1
Anadrill	3
Total	93

Casing

OD	L.O.T. / F.I.T.	Csg Shoe (MD/TVD)	Cementing
30 "	0ppg / 0ppg	191.0m / 191.0m	
13 3/8"	13.20ppg / 0ppg	778.3m / 778.3m	
9 5/8"	14.72ppg / 0ppg	2537.0m / 2537.0m	

HSE Summary

Events	Date of Last	Days Since	Remarks
Abandon Drill	14 Nov 2004	2 Days	Weekly abandon rig drill.
BOP Test	28 Oct 2004	19 Days	Tested all rams etc to 250 psi low and 5000psi high.
Environmental Incident		0 Days	
Fire Drill	14 Nov 2004	2 Days	Simulated fire in mud process room
First Aid		0 Days	
Lost Time Incident		0 Days	None
Safety Meeting	14 Nov 2004	2 Days	
Stop Cards	16 Nov 2004	0 Days	3 START Cards submitted

Marine

Weather check on 16 Nov 2004 at 24:00

Visibility	Wind Speed	Wind Dir.	Pressure	Air Temp.	Wave Height	Wave Dir.	Wave Period
10.00nm	7.0kn	090deg	1013bar	13.1C°	0m	000deg	0ft/sec

Roll	Pitch	Heave	Swell Height	Swell Dir.	Swell Period	Weather Comments
5.0deg	5.0deg	3.00m	3.0m	090deg	10.0ft/sec	

Rig Dir.	Ris. Tension	VDL	Comments
216.0deg	0klb	7788.0klb	

Boats	Arrived (date/time)	Departed (date/time)	Status	Bulks		
Lady Astrid		17:10 14/11/04	Portland	**Item**	**Unit**	**Quantity**
Lady Caroline	11:00 13/11/04		Jack Bates	**Item**	**Unit**	**Quantity**

Santos

DRILLING MORNING REPORT # 41
CALLISTER 01 (17 Nov 2004)

From : D. Atkins / J.Young

Well Data

Country	Australia	M. Depth	3914.5m	Cur. Hole Size	8.500in	AFE Cost	
Field	Otway Basin	TVD	3914.5m	Casing OD	9.625in	AFE No.	
Drill Co.	Transocean	Progress	0m	Shoe TVD	2538.0m	Daily Cost	
Rig	Jack Bates	Days from spud	34.67	F.I.T. / L.O.T.	0ppg / 14.70ppg	Cum Cost	
Wtr Dpth(LAT)	129.4m	Days on well	40.10			Planned TD	3629.0m
RT-ASL(LAT)	29.0m	Current Op @ 0600					
RT-ML	158.4m	Planned Op					

Summary of Period 0000 to 2400 Hrs

Pull remaining two anchors.
Rig Released 04:00 17/11/04

Operations For Period 0000 Hrs to 2400 Hrs on 17 Nov 2004

Phse	Cls (RC)	Op	From	To	Hrs	Depth	Activity Description
PA	P	AH	0000	0400	4.00	3914.5m	Pulled Rig Anchors. Anchor #1: 00:24 - 01:55 Anchor #5: 02:26 - 04:00 END OF CALLISTER-1

Phase Data to 2400hrs, 17 Nov 2004

Phase	Phase Hrs	Start On	Finish On	Cum Hrs	Cum Days	Max Depth
RIG MOVE/RIG-UP(RM)	92.5	08 Oct 2004	12 Oct 2004	92.50	3.854 days	0m
PRESPUD(PS)	25	12 Oct 2004	13 Oct 2004	117.50	4.896 days	158.0m
CONDUCTOR HOLE(CH)	9.5	15 Oct 2004	15 Oct 2004	127.00	5.292 days	192.0m
SURFACE HOLE(SH)	38.75	13 Oct 2004	16 Oct 2004	165.75	6.906 days	787.5m
SURFACE CASING(SC)	55.25	13 Oct 2004	17 Oct 2004	221.00	9.208 days	787.5m
INTERMEDIATE HOLE(IH)	250	17 Oct 2004	28 Oct 2004	471.00	19.625 days	2550.0m
INTERMEDIATE CASING(IC)	14.25	28 Oct 2004	28 Oct 2004	485.25	20.219 days	2550.0m
PRODUCTION HOLE(PH)	168.5	28 Oct 2004	05 Nov 2004	653.75	27.240 days	3914.5m
EVALUATION PRODUCTION HOLE(EP)	148.25	04 Nov 2004	11 Nov 2004	802.00	33.417 days	3914.5m
PLUG AND ABANDON(PA)	146	11 Nov 2004	17 Nov 2004	948.00	39.500 days	3914.5m

Survey

MD (m)	Incl Deg (deg)	Corr. Az (deg)	TVD (m)	'V' Sect (m)	Dogleg (deg/30m)	N/S (m)	E/W (m)	Tool Type
3557.20	2.26	215.08	3556.71	23.36	0.08	23.36	-27.80	MWD
3586.67	2.18	216.17	3586.15	22.43	0.09	22.43	-28.47	MWD
3700.75	2.17	212.69	3700.15	18.86	0.04	18.86	-30.92	MWD
3787.16	2.50	209.01	3786.49	15.83	0.13	15.83	-32.71	MWD
3898.83	2.70	196.27	3898.05	11.18	0.17	11.18	-34.63	MWD
3914.50	2.70	196.27	3913.70	10.47	0	10.47	-34.84	Projected to TD

Bulk Stocks

Name	Unit	In	Used	Adjust	Balance
Fuel	MT	0	0	0	776.0
Drill Water	MT	0	0	0	506.0
Potable Water	MT	0	0	0	236.0
Gel	MT	0	0	0	158.0
Cement	MT	0	0	0	157.0
Barite	MT	0	0	0	62.0

Personnel On Board

Company	Pax
Santos	3
Transocean	65
BHI	2
Halliburton	2
M.I	2
Subsea 7	3
Dril-Quip	2
Weatherford	3
Fugro	2
MO47	5
ECL	1
Anadrill	3
Total	93

Casing

OD	L.O.T. / F.I.T.	Csg Shoe (MD/TVD)	Cementing
30 "	0ppg / 0ppg	191.0m / 191.0m	
13 3/8"	13.20ppg / 0ppg	778.3m / 778.3m	
9 5/8"	14.72ppg / 0ppg	2537.0m / 2537.0m	

HSE Summary

Events	Date of Last	Days Since	Remarks
Abandon Drill	14 Nov 2004	3 Days	Weekly abandon rig drill.
BOP Test	28 Oct 2004	20 Days	Tested all rams etc to 250 psi low and 5000psi high.
Environmental Incident		0 Days	
Fire Drill	14 Nov 2004	3 Days	Simulated fire in mud process room
First Aid		0 Days	
Lost Time Incident		0 Days	None
Safety Meeting	14 Nov 2004	3 Days	
Stop Cards	16 Nov 2004	1 Day	3 START Cards submitted

Marine

Weather check on 17 Nov 2004 at 24:00

Visibility	Wind Speed	Wind Dir.	Pressure	Air Temp.	Wave Height	Wave Dir.	Wave Period
10.00nm	7.0kn	090deg	1013bar	13.1C°	0m	000deg	0ft/sec

Roll	Pitch	Heave	Swell Height	Swell Dir.	Swell Period	Weather Comments
5.0deg	5.0deg	3.00m	3.0m	090deg	10.0ft/sec	

Rig Dir.	Ris. Tension	VDL	Comments
216.0deg	0klb	7788.0klb	

Boats	Arrived (date/time)	Departed (date/time)	Status	Bulks		
Lady Astrid		17:10 14/11/04	Portland	**Item**	**Unit**	**Quantity**
Lady Caroline	11:00 13/11/04		Jack Bates	**Item**	**Unit**	**Quantity**

SECTION 7: TIME / DEPTH CURVE

Days vs Depth - Callister 1

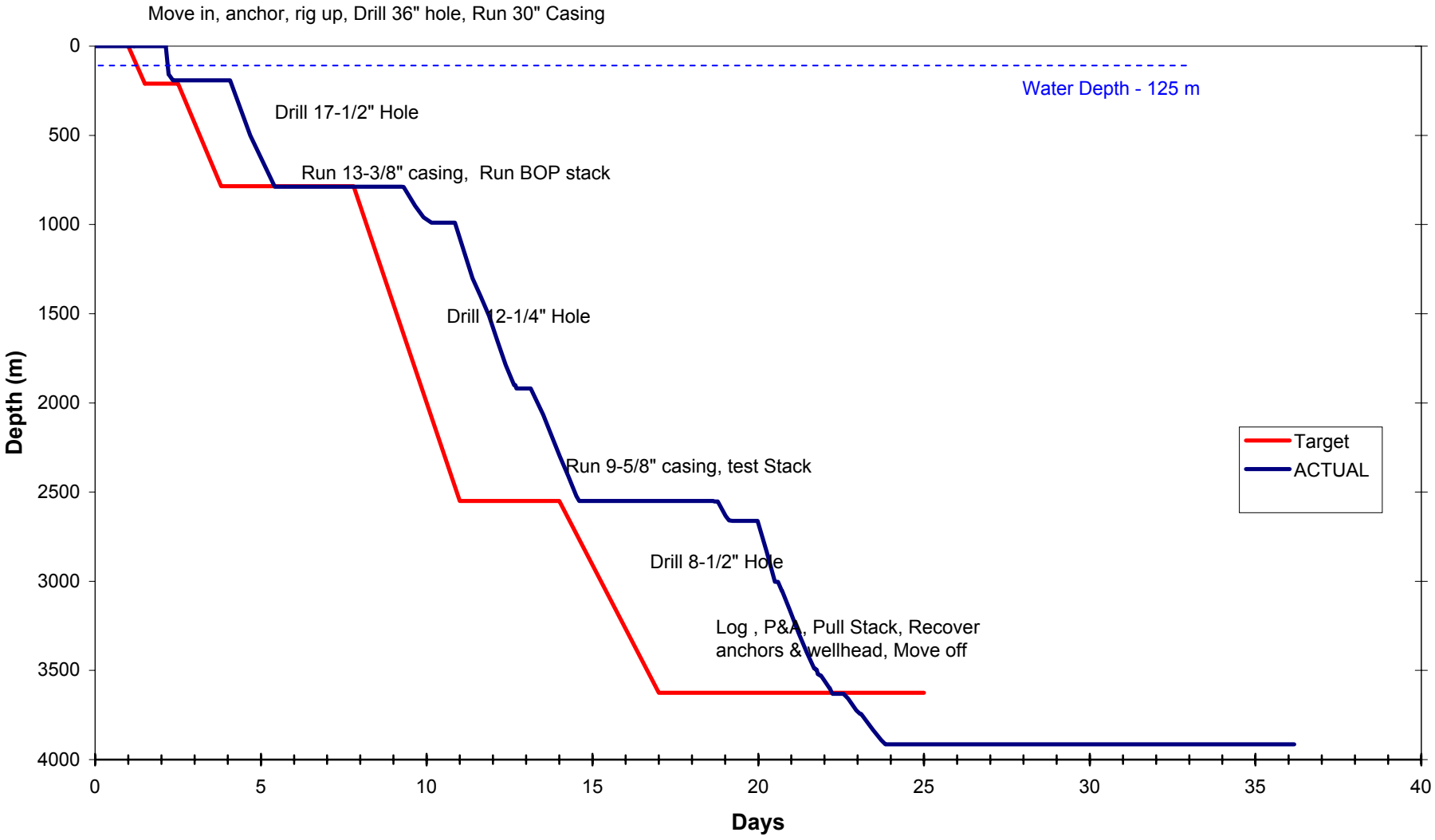

SECTION 8: BHA SUMMARY

Schlumberger

DRILLING & MEASUREMENTS - BHA DATA

Job Number	AWA-04-07
Run Number	1
BHA Number	3

Item	Description	Vendor	Material	Serial Number	Fishing Neck OD	Fishing Neck Length	Stab OD	OD	ID	Bot Connection Size	Bot Connection Type	Top Connection Size	Top Connection Type	Len	Cum Len
		UNITS			in	m	in	in	in					m	m
1	PDC Bit	Reed Hycalog	Steel	207742				12.25				6.63	Reg P	0.29	0.29
2	A962GT Mud Motor	Schlumberger	Steel	2099	9.63	1.07	12.13			6.63	Reg B	7.63	Reg B	10.03	10.32
3	Float Sub	Schlumberger	Steel	3287		0.90		9.50	3.00	7.63	Reg P	7.63	Reg B	0.90	11.22
4	Roller Reamer	Smith	Steel	XM 066	9.63		12.25	9.50	3.00	7.63	Reg P	7.63	Reg B	2.52	13.74
5	CDR9	Schlumberger	Monel	9546	9.50	0.73		9.63	5.88	7.63	Reg P	7.63	H90 B	7.20	20.94
6	PowerPulse	Schlumberger	Monel	W693	9.50	0.50		9.00	4.25	7.63	H90 P	7.63	Reg B	8.46	29.40
7	Roller Reamer	Smith	Steel	XM 065	9.50	0.75	12.25	9.50	3.00	7.63	Reg P	7.63	Reg B	2.52	31.92
8	NMDC	Schlumberger	Steel	D173	9.50	9.20		9.50	3.00	7.63	Reg P	7.63	Reg B	9.20	41.12
9	Crossover	TSF	Steel	X/O 2	9.50	1.32		9.50	3.00	7.63	Reg P	6.63	Reg B	1.32	42.44
10	7 x 8" HWDC	TSF	Steel		8.00	66.00		8.00	2.88	6.63	Reg P	6.63	Reg B	74.15	116.59
11	8" Jar		Steel	48907-C	8.00	0.61		8.00	3.00	6.63	Reg P	6.63	Reg B	9.78	126.37
12	2 x 8" DC	TSF	Steel		8.00	27.00		8.00	2.88	6.63	Reg P	6.63	Reg B	18.49	144.86
13	8" Accelator		Steel	DAH 01586	8.00	0.61		8.00	3.00	6.63	Reg P	6.63	Reg B	10.90	155.76
14	8" Drill Collar	TSF	Steel	DC 001	8.00	9.17		8.00	2.88	6.63	Reg P	6.63	Reg B	9.17	164.93
15	Crossover	TSF	Steel	X/O 9	8.00	1.14		8.00	3.00	6.63	Reg P	4.50	IF B	1.14	166.07
16	12 x 5" HWDP	TSF	Steel					6.63	3.00	4.50	IF P	4.50	IF B	110.77	276.84
17															
18															
19															
20															
21															
22															
23															
24															

TIME/DEPTH DETAILS

	1	2	3	4	5
Date/Time	20-Oct-04	21-Oct-04			
Field Engineer	AMCastro	DHastie			
Depth	760.14	903.37			
Average ROP	94.91	66.25			
Avg. Std. Pres.	1464.16	2150.00			
Desurger 1	800.00	800.00			
Desurger 2	800.00	800.00			
Tur. RPM @ FR	2460.94	3320.31			
FR @ Tur. RPM	800.00	1000.00			
Avg. RPM	82.00	66.00			
Max RPM	90.00	75.00			
Total Shocks	0.00	3.00			
Max Shock	0.00	0.00			
Avg. Surf. WOB	12.00	18.00			
Max Surf. WOB	15.00	20.00			
Avg. DH WOB	11.50	7.61			
Max DH WOB	14.00	8.31			
Avg. Surf. Torq.					
Max Surf. Torq.					
Avg. DH Torq.	2.30	3.40			
Max DH Torq.	5.60	4.40			
Formation Type	Cement	Claystone			
Friction					
Drag Up					
Drag Down					
Mud Weight	8.86	8.87			
Funnel Vis.					
Plastic Vis.					
Circ. Temp	28.00	35.00			
Signal Strength	15.10	16.00			
Bit Deviation	1.00	1.05			
Differential Pres.					

PREDICTED BHA TENDENCY

BHA is expected to hold vertically while drilling the 12.25in section.

Hookload	119.25	klbs	Wt. Below Jars	35.00	klbs
Pickup Wt.	74.20	klbs	Wt. Above Jars	16.00	klbs
Slack Wt.	45.00	klbs	Total Air Wt.	51.00	klbs

Stabilizer Description	Mid Pt To Bit	BLADE Type	BLADE Length	BLADE Width	GAUGE Length	GAUGE In	GAUGE Out
UNITS	m		in	in	in	in	in

Bit To Read Out Port			Bit To Measurement Port		
CDR	16.85	m	GR LWD	19.16	m
PPL	22.72	m	RES LWD	15.68	m
		m	APWD LWD	16.39	m
		m	D&I PPL	25.07	m
		m			m
		m			m
		m			m

BATTERY Tool	Unloaded (V) Before	Unloaded (V) After	Loaded (V) Before	Loaded (V) After	Run Hrs BOT	Run Hrs AMP	Cum Hrs BOT	Cum Hrs AMP
H524743-40040	21.74		20.56		24.60	3.44	24.60	3.44
H524743-40041	21.71		20.56		24.60	3.44	24.60	3.44

SECTION 9: BIT RECORD & PERFORMANCE SUMMARY

DFE above MSL : 29.0m Lat : 38 Deg 31 Min 59.690 Sec Spud Date : 13 Oct 2004 Release Date :

Water Depth : 129.4m Long : 141 Deg 28 Min 23.462 Sec Spud Time : 12:00 Release Time :

Bit Record

Well: CALLISTER 01

Date In	IADC	Bit#	Size in	Ser #	Mfr	Type	Jets # x /32nd"	D.In m	D.Out m	Prog m	Hrs o/b	SPP psi	Flow gpm	WOB klb	RPM	MW	TFA	ROP m/hr	I	O1	D	L	B	G	O2	R
13 Oct 2004	115	1	36.00	MR4109	SMITH	DSJc	3 x 24	158.4	192.0	33.6	3.00	1000	500	2.0	105	4.35	1.325	11.2			NO	A	X	I	NO	TD
14 Oct 2004	115	2	17.50	A98111	REED	T11	3 x 22	192.0	787.5	595.5	38.10	2606	1090	15.0	120	7.25	1.42	15.63	4	4	WT	A	4		NO	TD
20 Oct 2004	M422	3	12.25	207742	HYCALOG	DSX194HGSUW	1 x 20 9 x 11	787.5	990.0	202.5	6.20	2480	950	10.0	70	7.65	0.835	32.66	8	8	RO	A	X	1	ER	PR
21 Oct 2004	M323	4	12.25	108993	HYCALOG	DSX104HGW	5 x 14	989.0	2550.0	1561	57.60	2806	870	10.5	97	8.21	0.752	27.1	6	5	WT	A	X	I	ER	TD
29 Oct 2004	M422	5	8.50	109886	HYCALOG	RSX272	2 x 10 5 x 14	2550.0	2662.0	112	5.30	2421	700	12710.0	130	8.42	0.905	21.13	3	1	BU	A	X	I	CT::WT	PR
31 Oct 2004	M223	6	8.50	109737	HYCALOG	DSX104HG	5 x 15	2662.0	3914.5	1252.5	58.10	3947	700	18000.0	130	9.49	0.863	21.56	2	2	WT	A	X	I	CT	TD
08 Oct 2004	M223	6RR	8.50	109737	HYCALOG	DSX104HG		3914.5	3914.5	0	0	0	0	0	0	10.38	0		2	2	WT	A	X	I	CT	BLANK

SECTION 10: DRILLING FLUIDS REPORT

Fluids Recap

Santos Ltd

Callister-1
Vic/P51
Exploration
Otway Basin, Vict.

Prepared by: **Nigel Warman**

MI SWACO

M-I *L.L.C.*

ONE-TRAX

DRILLING FLUID DATA MANAGEMENT SYSTEM

Operator:	Santos Ltd	**Spud Date:**	12/10/2004
Well Name:	Callister-1	**TD Date:**	4/11/2004
Field/Area:	Vic/P51	**Location Code:**	7001
Description:	Exploration	**Project Engineer:**	Nigel Warman
Location:	Otway Basin, Vict.	**Sales Engineer:**	Paul Marshall/Alan Sim
Warehouse:	Portland, Vic.	**Sales Engineer:**	ChrisAurisch/Nick Cooper
Contractor:	Transocean	**M-I Well No.**	16149

Comments: Arrived on location 11/10/04, run anchors, ballast down and spud on 13/10/04.

Type	Size in	Depth m	TVD m	Hole in	Max MW sp.gr.	Fluid 1	Fluid2	Drilling Problem	Days	Cost $
Casing	30	192	192	36	1.03	Spud Mud		None	3	14865.24
Casing	13.375	785	785	17.5	1.04	Spud Mud	N/A	None	3	4767.88
Open Hole	9.625	2538	2538	12.25	1.1	POLY-PLUS	N/A	None	11	108103.75
Open Hole	.	3914	3914	8.5	1.69	GLYDRIL	N/A	None	19	147135.88

Total Depth: 3914 m TVD: 3914 m Water Depth: 129 m Drilling Days: 37 Total Cost: 274,872.75

DRILLING FLUIDS RECAP FOR SANTOS LIMITED
CALLISTER 1

CONTENTS:

DRILLING FLUIDS RECAP FOR SANTOS LIMITED
CALLISTER 1

DISCUSSION
BY
INTERVAL

DRILLING FLUIDS RECAP FOR SANTOS LTD
CALLISTER 1

INTRODUCTION

Santos Limited was the operator of Callister–1, the first of two exploration wells, offshore in the Otway basin, approx 20Km south of Portland, Victoria (Vic/P51). Specifically the well is situated at 38 deg.31′ 59.72″ south latitude and 141 deg. 28′ 12.39″ east longitude in 125m water. Callister–1 was planned as a conventional vertical well to approx. 3629m, with the K-77 in the Waarre as the primary target at approximately 3260m, and K90 in the Top Belfast/Nullawarre Sst at approx. 2284mKB and K91 Intra Paaratte at 1942mKB as the secondary targets.

The Transocean semi-submersible rig 'Jack Bates' was towed onto location and into position with anchors run on 12th October 2004. The well was spudded on 13th October 2004 and P& A on the 11th November 2004.

The 36″ section was drilled to 192m, with 30″ casing set at 191.29m. In undifferentiated carbonates, the 17½″ to 615m with 13⅜″ cemented at 785m. Both sections were drilled with seawater and PHG sweeps.

The well was displaced to an 8% KCl/PHPA system for the 12¼″ section and 8%KCl/PHPA/Glycol for the 8½″ interval from 2550m to TD at 3914m.

Age	Formation	Lithology	Depth (RT)
	Seabed		158 m
Tertiary	Undifferentiated	Carbonates	158-853 m
Base tertiary	Wangerrip	Sandstone/ Claystone	853 –1105 m
Up. Cretaceous	Timboon Sandstone	Sandstone	1105-1608 m
Middle Cret.	Paaratte	Silt/Sandstone	1608-2225 m
Low. Cretaceous	Nullawarre	Silt/Sandstone	2225-2268 m
	Belfast	Siltstone	2268-3428 m
	Waarre	Silt/Sandstone	3428-3873 m
	Eumeralla	Sand/Siltstone	3873-3914 m
Total Depth			**3914 m**

DRILLING FLUIDS RECAP FOR SANTOS LTD
CALLISTER 1

Interval I	158-192 meters	36″ Hole	30″ casing set at 191 m
Interval II	192-787.5 meters	17½″ Hole	13⅜″″ casing set at 785 m

MUD TYPE : SEAWATER/HI VIS SWEEPS

HOLE PROBLEMS : None

MUD PROPERTIES :

Mud Weight : 1.04 SG
Viscosity : 100+sec/qt

OPERATIONS:

The rig was positioned over the Callister location in 129m of water with a 29m air gap.

A 36′/26″ BHA was made up, run to the seabed and the interval controlled drilled to 92m. 30″ casing was run, landed and cemented without incident.

The 17½″ BHA was made up, run in and cement tagged at 185m.

Cement and shoe were drilled out with seawater and hi-vis sweeps and once below the shoe, pump rates were increased to 1100gpm and the section controlled drilled at approx. 30m/hour to an interval TD of 787.5m.

13⅜″ was run and cemented, again without incident.

MUD

The 36″ interval was drilled with seawater and pre-hydrated gel sweeps pumped at a rate of 100 bbl/stand drilled, with returns to the seabed. A total of 1605bbl of PHG was prepared for this interval (and approx. 4500 bbl for both the 36″ and 17.5″ sections) with approx 950bbl consumed as sweeps and TD hole displacement

To drillwater, treated with approx. 0.25ppb soda ash, 35-40ppb bentonite was added and allowed to hydrate under constant agitation. This provided sweep material with

a funnel viscosity of 100+ seconds/quart. When deemed necessary, lime was added for additional viscosity.

Initially 75bbl of hi-vis PHG was pumped prior to each connection and chased with string contents of seawater. This practice was change at approx. 460m and two sweeps, each of 50 bbl, were pumped, one mid stand and the second at stand down. At TD (787.5m) the hole was circulated for 15 minutes and a final 100bbl sweep was circulated. The hole was then displaced with 650bbl and a 40 bbl KCl pill was spotted on bottom.

Remaining PHG at TD was retained and on the casing prior to cementing.

SOLIDS CONTROL:

None in use.

OBSERVATIONS AND RECOMMENDATIONS:

No recommendations are noted which could improve the drilling of this interval.

DRILLING FLUIDS RECAP FOR SANTOS LTD
CALLISTER 1

Interval III	787.5m-2550m	12¼"Hole section	9⅝" casing set at 2538m

MUD TYPE : KCL/PHPA/POLYMER

HOLE PROBLEMS : NONE

MUD PROPERTIES :

Mud Weight	:	1.06 – 1.10 sg
6 RPM reading	:	7-12
APT FL	:	3.8-9.4
10 Min Gel	:	8-14
pH	:	8.7-11.0
MBT	:	0-6
LGS	:	0-2.8
KCL	:	7-8

OPERATIONS:

18¾" BOPs were run and landed on the 20" riser and pressure tested. The 12¼" BHA was made up, the mud motor surface tested and run in the hole. Cement was tagged at 739m and shoe track drilled out with newly prepared KCl/PHPA mud. New hole was drilled to 787.5m and a LOT performed with 1.06 sg mud, returning a mud weight equivalent of 13.2ppg.

Drilling proceeded at an average ROP of 24m/hr to 991m where the bit was pulled after rate of penetration has reduced virtually to zero m/hr. It appears to have been suited to drill out cement and shoe having no difficulty penetrating the Tertiary carbonates, but stopped drilling once the lower Tertiary siltstone was intersected.

Some concern were expressed regarding the potential for differentially sticking in the sand zones above 1550m, however as flow checks revealed only partial loses of 3 bbls/hr down hole loses it was decided not to add Mix II as a precautionary measure.

The section was drilled to 2550m with no further problems. The hole was tight on pulling the first few stands, however thereafter no overpull was experienced. The hole was logged (without success) and 9⅝" casing run and set at 2538m

DRILLING FLUIDS RECAP FOR SANTOS LTD
CALLISTER 1

MUD:

A total of 2700bbl of new mud was prepared in advance of displacing the well to programme specifications of :

KCl	:	8% by weight	(approx. 30ppb)
Sod. Bicarb	:	0.25	ppb
PAC UL	:	1-1.5	ppb
DUOVIS	:	1-1.5	ppb
POLYPLUS	:	0.7	ppb

Cement contamination as a result of drilling out cement with the newly prepared mud presented problems mainly from high pH – reaching 11 before Citric acid was added to the system. Calcium was pre-treated in anticipation and subsequently to reduce total hardness to a modest 260ppm.

The extent of the cement contamination was such as to prompt immediate treatment with polymers direct to the system to restore properties in line with the programme specifications.

Mud Weight:
Initial mud weight on make with 8% KCl was 1.06sg (8.8ppg) and over the first 900m remained in the tight range of 1.06-1.07 sg. (8.8-8.9ppg). A mud weight of 1.14 sg represents a drill solids accumulation in the system of 5% (given a constant KCl conc. of 8%). This figure was/was not exceeded over the section. To control the weight at the programmed maximum of 1.10 sg was not a problem, however the dilution rate of 3.1 bbls/meter was rather more than was programmed, however almost 3000 bbls were carried over to the 8 ½" section at a cost of $15.29/bbl. LGS remained well below 5 %.

Solids:
Containment of LGS, taken to mean drill solids, to below 5% without the advantage of any mechanical solids control equipment other than the four VSM 300 shakers, required the formal implementation of a dump and dilute schedule.

A regime of 100bbl active mud dumped at the shakers for every 5 stands drilled was initiated and with the informed co-operation of all the parties involved commenced on stand drilled #25.

This programmed dumping did not take into account mud lost at the shakers as mud on cuttings.

DRILLING FLUIDS RECAP FOR SANTOS LTD
CALLISTER 1

Replacement dilution to maintain active pit volume of 350-400bbl enabled the interval to be drilled to within the programme LGS parameter of <5%.

This procedure sounded well in theory however 'natural' loses which periodically occurred at the shakers due to slightly high rheology accounted for 55% of the total surface loses.

KCl:

The initial make up KCl concentration of the system was 28.6 ppb. Subsequent premix preparation anticipated depletion and was prepared with a margin of 2-3.5 ppb over the programmed 30 ppb. This figure provided a roughly constant KCl determination of approx. 28.5-30.0 ppb and in doing so gave at least an indication of rates of K+ depletion.

PHPA:

Giving consideration to the high funnel viscosity and the tendency of newly prepared un-sheared PHPA mud to 'slide' off the shakers, the initial make up concentration was restricted to approximately 0.7ppb. This figure was increased, initially by way of direct additions to the active (after cement contamination depletion) and thereafter by increasing premix additions to approximately 1.5 ppb, thereby maintaining an active system concentration of between 0.8-1.3ppb.

MBT:

There was no issue with MBT levels as the majority of the lithology consisted of sand in the Timboon, and silt, shale and some claystone from the Paaratte.

RHEOLOGY/6RPM:

Additions of DUOVIS added via premixes controlled the 6rpm as close to the programmed minimum of 10-12. Any higher readings resulted in shaker loses and the need to screen down to a larger mesh screen.

OBSERVATIONS AND RECOMMENDATIONS:

No recommendations are noted which could improve the drilling of this interval.

DRILLING FLUIDS RECAP FOR SANTOS LTD
CALLISTER 1

Interval IV	2550m-3914m	8½ "Hole section	P & A

MUD TYPE : KCL/PHPA /GLYCOL

HOLE PROBLEMS : FLUID INFLUX

MUD PROPERTIES :

Mud Weight	:	1.08 – 1.69 sg
6 RPM reading	:	7 - 13
APT FL	:	4.2 - 6.6
10 Min Gel	:	9 - 42
pH	:	8.6 - 11.3
MBT	:	5 - 12
LGS	:	2.1% - 5.8%
KCL	:	6.25% - 9.8%

OPERATIONS:

KCl/PHPA/Polymer mud remaining from the 12¼" was used to drill out this section. Cement was drilled from 2450m and a leak off to equivalent mud weight of 14.7 ppg was carried out once 3 m of new formation had been drilled.

Cement contamination was treated out with sodium bicarbonate and citric acid used to reduce the pH.

Once drilling commenced, GLYDRIL MC was added to the circulating system at 5 % by volume and weight was allowed to trend upward to 9.4ppg. While adding the GLYDRIL MC, aeration within the mud became apparent, originally it was suspected that the mixing hopper to the active was responsible; however the problem did not improve once that piece of equipment was shut down. Additions of DEFOAM-A did little to alleviate this problem.

At 2663m the bit was pulled as ever-decreasing ROPs were being recorded. Partial bit balling was observed as well as some damage to several 'cutters'. It was probable that the damage to the cutters had been the cause of the bit balling.

Drilling resumed at 30-50m/hr and the 'weight up' schedule was followed to 11.6ppg as set down by Santos.

DRILLING FLUIDS RECAP FOR SANTOS LTD
CALLISTER 1

This was later revised, (to 12.2ppg and on to 13 ppg) as the section TD was extended due to the depth that the Waarre Sands were encountered. (a further 300meters were drilled mainly as a result of the Flaxman Formation being thicker than anticipated.)

For all new mud bled into the active, a corresponding volume of GLYDRIL was added to maintain the programmed 5% by volume content.

Towards the section TD, and within the last 200-300m, an increase in the 10 min gels was recorded along with an increase in Fluid Loss. Premix volume was weighted up with Barite and bleed into the active while the corresponding amount of 'old' mud was diverted into another pit. Overall solids content increased with weight, however LGS remained within specification.

This section was eventually drilled to 3914m with a mud weight of 14.1ppg. The hole was circulated clean. The trip out to log was excellent. No over pull or drag. The pumps were not used.

During first Schlumberger log, some possible tight spots were noted in the hole.

A wiper trip was performed to TD; washing and reaming from 2700 m to 3150 m. Last stand before TD was washed down with no fill encountered. Some light spots being evident in the mud system (lowest weight recorded 13.9 ppg) the mud was circulated to even mud weight before POOH to run Schlumberger MDT log. A CMR log was then run before a further wiper trip was deemed prudent due to possible water influx from the well.

The second wiper trip recorded a minimum mud weight of 12.6 ppg with the maximum mud weight observed being 14.1 ppg. As no heavy mud weights were recorded, an influx of water is the most likely explanation.

The mud was conditioned to 14.1 ppg and a further wiper trip to the shoe performed. Circulating on bottom after this trip showed even mud weight and the string was POOH to run further wireline logs. A loss of 23 bbls was recorded during the trip out of hole.

A further two Schlumberger logs were run, MSCT and VSP, without incident before rigging down Schlumberger and setting cement plugs to P/A the well.

Three cement plugs were run on bottom with the water spacer being circulated out after the first two plugs. As the water-based spacer was strung out, long interfaces were observed and dumped at surface to minimise treatment of the mud when circulating to even density.

DRILLING FLUIDS RECAP FOR SANTOS LTD
CALLISTER 1

A cement retainer was picked up, RIH and set at 2508m. 22bbls of cement slurry was squeezed through the retainer to seal the casing shoe. A further 4 bbls were set above the retainer before displacing the well to WBM treated with Glute 25 and Conqor 303A for corrosion inhibition and POOH.

The string was pulled back to 250m where the tophole volume was displaced to 9.1ppg WBM for cutting the casing. The wear bushing was pulled and the 9⅝" casing was cut and retrieved.

A second cement retainer was run into the 13⅜" casing and set at 235m. Following a successful pressure test, the well was displaced to seawater prior to cementing the final plug to 185m. This plug was pressure tested prior to POOH.

The riser and BOP stack was recovered prior to final abandonment procedures being carried out. Last anchors were lifted on the 16th November 2004 and the rig was transferred to Amrit-1 Santos Well.

MUD:

Approximately 3000 bbls of existing mud from the 12¼" section was used as a base for this section. A further 600 bbls were build for whole mud dilution with the following formulation:

KCl	:	8% by weight	(approx. 30ppb)
Sod. Bicarb	:	0.25	ppb
PAC UL	:	1-1.5	ppb
DUOVIS	:	1-1.5	ppb
POLYPLUS	:	0.7	ppb

Cement contamination as a result of drilling out cement was recorded and all remaining bicarb and citric acid used with little effect. However some daily dilution saw the pH gradually decrease from 11 down to 9.1 with no ill effects seen on the mud rheology.

An increasing trend in 10-minute gels and Fluid Loss was observed while drilling the last 300m. This was due to a massive increase of solids, (barite from weight increases) and little dilution. A 15% dilution was carried out just prior to TD so that the mud specification was in line prior to logging.

DRILLING FLUIDS RECAP FOR SANTOS LTD
CALLISTER 1

Mud Weight:

This sections drill out weight was 9.1ppg (with a leak off of 14.4ppg equivalent mud weight) and adjusted as per the following.

9.1	ppg	at	2550m.	
9.7	ppg	at	2770m	
10.3	ppg	at	2850m	
10.9	ppg	at	3000m	
11.5	ppg	at	3150m	
12.0	ppg	at	3515m	(due to gas.)
12.6	ppg	at	3737m	
12.8	ppg	at	3788m	
13.0	ppg	at	3864m	
13.9	ppg	at	3914m	
14.1	ppg	at	3914m	

Solids:

The control of LGS to below 5%/volume was also a criteria for this section. Perhaps mostly due to the reduced pump rates and increased inhibition provided by the GLYDRIL MC this was possible. It was in fact for the later part of the section to run only two shakers thus extending screen life of the remaining stock. No 'stickiness' of the cuttings was seen on the shakers.

KCl:

The initial make up KCl concentration of the system was 31.2ppg. Subsequent premix preparation anticipated depletion and was prepared with a margin of 3-4ppb over the programmed 30ppb. Little depletion of the K+ ion was recorded until approximately 3455 m in the Waarre B (a shale formation)

PHPA:

The initial concentration was built to approximately 0.7ppb. This figure was increased, initially by way of direct additions to the active and thereafter by way of premix additions to 0.8 - 1.0 ppb. At this level the cuttings appeared to be adequately encapsulated and in good condition on surface

MBT:

MBT remained within spec at 5-10. As the lithology was mainly siltstone with some sands in the lower reaches of the section little dilution was required to achieve these values.

DRILLING FLUIDS RECAP FOR SANTOS LTD
CALLISTER 1

RHEOLOGY/6RPM:

Additions of DUOVIS added via premixes controlled the 6rpm close to the programmed minimum of 8-10. Higher values would have compromised the overall rheology with increased losses on shakers and an inability to fine down screens and maintain solids within specification.

OBSERVATIONS AND RECOMMENDATIONS:

No recommendations are noted which could improve the drilling of this interval.

DRILLING FLUIDS RECAP FOR SANTOS LIMITED
CALLISTER 1

DAILY DISCUSSION REPORT

MI SWACO	**Operator :** Santos Ltd **Well Name :** Callister-1 **Contractor :** Transocean	**Field/Area :** Vic/P51 **Description :** Exploration **Location :** Otway Basin, Vict.	**Daily Discussion** M-I Well : **16077**

12/10/2004	TD = 0 m	Day 1

Arrive on location, position Rig, run anchors and ballast down. Make up BHA and Prepare to spud Callister 1 with 36" bit .
Start building spud mud. Call this report 5 to coincide with Santos reports. Receive bulk gel.

Prepare to spud Callister-1 with seawater and PHG sweeps.

13/10/2004	TD = 192 m	Day 2

Make up 36" BHA and RIH and tag seabed at 158.42 m. Spud at 12:00 hrs. Drill and sweep to 192m. Displace well with PHB. POOH. Rig up, run 30" and prepare to cement.
Build additional spud mud volume.

Make up 36" BHA, spud and drill to 192m. Run 30".

14/10/2004	TD = 242 m	Day 3

Cement 30" conductor. Wait on cement. release running tool and POOH. Make up 17.5" BHA and RIH.
Build additional spud mud. Total mud available: 2700bbl

Cement 30" conductor. Make up 17.5" BHA and RIH.

15/10/2004	TD = 500 m	Day 4

Prepare to drill cement. Carry out repairs to mud pump #2. RIH and drill ahead to 500m, pumping 2 x 50bbl sweeps each stand drilled or as required.

Add lime to spud mud prior to use. Prepare sufficient additional high vis PHG to complete section at current sweep rate and volume.

Drill out cement and new hole to 500m with seawater and hi vis PHG sweeps.

16/10/2004	TD = 787.5 m	Day 5

Drill ahead 17 1/2" hole at 20 m/hr to TD at 787.5m. Hole appears in good condition. Circulate hole and displace to hivis PHG. POOH and prepare to run 13 3/8" casing.
Continue to sweep 50 bbls twice/stand. Prepare a 60bbl hivis 9.6ppg KCl inhibited pill. At TD sweep hole with 100bbl hi-vis PHG, displace hole(650bbl) to unfloculated PHG and spot 40bbl KCl pill on bottom. Retain 500bbl PHG for contingencies, dump remaining and prepare to mix PHPA/KCl system. Currently off loading 12.25" chemicals and will be reported on next DMR.

Drill ahead 17 1/2" hole to TD at 787.5m. Prepare to run 13 3/8" casing.

17/10/2004	TD = 787.5 m	Day 6

Run, circulate and cement 13 3/8" casing. Rig up and prepare to run BOPs.
Circulate casing with excess PHG. Dump and clean pits and commence preparation of PHPA/KCl system.

Run and cement 13 3/8" casing. Rig uo and prepare to run BOPs

18/10/2004	TD = 787.5 m	Day 7

Run Riser and BOP stack. Prepare to land same.
Continue building new volume. Received 20 x 1 MT KCL.

Run and land BOP and Marine Riser.

19/10/2004	TD = 787.5 m	Day 8

Run and land BOP stack. Pressure test casing and well head.
Add 8% by weight big bags of KCLand 0.7 lb/bbl Polyplus to all surface volume. Mud properties confirmed once system is sheared and drilling commenced.

Run, land and test stack.

20/10/2004	TD = 875 m	Day 9

MU 12 1/4" BHA and RIH. Tag TOC at 739m. Displace well to KCl/PHPA system and drill out cement. Drill new hole to 780m and perform LOT with resultant mud wt. equiv=13.2ppg. Drill ahead to 875m
Dress shakers with initial screens. (20s over 84s) to accomodate new unsheared PHPA system. Screen down to 2x165, 2x200 mesh and further to 4x200 mesh. Treat system for cement contamination with citric and bicarb. Currently treating system to increase low end rheology, fluid loss and maintain KCL at 8%. Propose dumping 100bbl at shakers every 5 stands drilled to contain LGS.

MU 12 1/4" BHA and RIH and drill cement.Perform LOT and drill ahead.

21/10/2004	TD = 991 m	Day 10

Drill ahead at 10-20-25 m/hr to 991m. POOH due lack of ROP. Change bit and RIH. Slip and cut.
Unable to treat active direct due to no suction. Increase vis in reserve pits and bleed in high rheology mud. Lose over the shaker, reduce pump rate and screen down. Build volume when possible. Prepare additional premix in pits #1 and #2.

Drill ahead at 20-30m/hr to 991m. POOH. Change bit and RIH.

22/10/2004	TD = 1385 m	Day 11

RIH and drill ahead and survey.
Finishing mixing pit 2. Add OSI-L to the active as per programe and bleed in thick mud to the active to increase and maintain low end rheology. Build volume. Allow losses on shaker for transfer of volumes . lose mud over the header box while boosting the riser. Build pit 4.

RIH. Slip and cut drill line. Drill ahead.

23/10/2004	TD = 1889 m	Day 12

Drill ahead at 20-50 m/hr. No losses or torque. Hole appears in good condition. lithology of sand/sandstone trending to mostly claystone from 1550m. Drill ahead with variable ROPs.
Maintain ph with KOH and oxygen scav with OS-1. Continue to bleed in premix with elevated concs of PHPA and KCL to maintain programed levels in the suction. Dump and allow to lose volume at the shaker,usually from boosting the riser. Increase Dilution rate to control weight. Cgd shkr # 3 to 200 mesh to optimise solids removal. Mud weight stable.

Drill Ahead

24/10/2004	TD = 2060 m	Day 13

Drill ahead to 1917 and POOH to the shoe for repairs on the top drive. RIH and drill ahead.
Build volume and condition surface mud. No treatment possible while tripping.

Drill ahead to 1917 and POOH to the shoe for repairs on the top drive.

25/10/2004	TD = 2520 m	Day 14

Drill ahead towards TD.
Build volume and continually bleed in to the active to control wt at 9.2 ppg max. Dump when volume in the active is too high. Increase LER and take large losses over the shakers when thicker mud hits the screens. Screen down to control loses, while cutting back rheology.

Drill ahead

26/10/2004	TD = 2550 m	Day 15

Drill to the section TD of 2550 m and circulate clean. Flow check and POOH. Rig up and RIH to run (PEX-DSI-HLAS) logs. Test logging string in hole no-go. POOH, troubleshoot and RIH to log. Losses while tripping 55 bbls. Average static loss while logging 3 bbls/hr.
Raise pH. Biocide on manifest unable to be found. Mud in good condition prior to logging.

Drill to section TD. POOH to log.

27/10/2004	TD = 2550 m	Day 16

Complete logging programme. Rig up and start run 9 5/8" casing. Continuing seepage losses noted downhole.
Dump and clean sandtraps. Transfer 88 bbls of good mud to pit # 3. Partially transfer mud back to sandtraps.

Complete logging programme. Run 9 5/8" casing.

28/10/2004	TD = 2550 m	Day 17

RIH 9 5/8" casing. Cement casing as per programme. Downhole loss of 20 bbls noted while mixing and displacing cement.
Prepare to mix reserve mud for next section.

RIH 9 5/8" casing

29/10/2004	TD = 2550 m	Day 18

Pull wear bushing. MU 8 1/2" BHA and RIH. Drill plugs, drill cement in shoe track. Prepare to drill shoe, 3 m of new formation and perform leak off test.
Build volume in pit # 4 and pretreat surface active with bicarb. Fill the sandtraps.
Adjusted Glut inventory (-32) to reflect missing stock. Treat active with Soda Ash and Citric Acid to counter cement contamination.

RU 8 1/2" BHA and RIH.Drill cement.

30/10/2004	TD = 2662 m	Day 19

Drill cement from 2450m and 3 m of new formation. Pull into the shoe and circulate BU. Carry out LOT to equiv mud weight 14.7ppg. Drill ahead to 2662 m and POOH to change the bit.
Glute found amongst Cement Chemicals. Treat for cement contamination with Bicarb and reduce pH with citric acid. Add 5 % Glydril as per programe. Add via flow line to reduce aeration of the suction pit. Transfer premix to control weight at 9.4 ppg. Added antifoam in attempt to control apparent aeration of mud.

Drill cement and carry out LOT. Drill ahead. POOH for a bit trip.

31/10/2004	TD = 3001 m	Day 20

Change out bit. Partial bit balled with some associated wear. RIH. Drill ahead as per programme; raising density of mud in line with depth. Maintain active system with additions of PHPA and Glycol. Raise density of active system as per Santos instructions. Density of mud at 00:00 hrs : 10.0 ppg.

POOH and change bit. RIH and drill ahead.

1/11/2004	TD = 3392 m	Day 21

Drill ahead. Increase weight in stages to 11.5 ppg
Continue to increase mud weight as per programe. Increase low end rheology with additions of Duovis and bleed new mud as necessary. Maintain Glydril and Polyplus content with direct additions to the FL.

Drill ahead. Add barite to increase mud weight as per programe.

2/11/2004	TD = 3630 m	Day 22

Drill ahead. circulate gas from 3487m with a max recording of 2700 units from 3515m. Increase mud weight to 12 ppg and drill ahead. Significant gas still circulated out at 3630 m. Pick up pipe to drill ahead to new proposed TD of 3950. Plan to increase M.W. to 12.1 ppg while drilling ahead.
Bleed in unweighted whole mud to maintain 11.5-6 ppg. Add a corresponding volume of Glydril to retain conc at 5 %. Circulate gas from the Waarre A, inc mud weight and add KCL to maintain potassium inhibition.

Drill ahead and increase mud weight.

3/11/2004	TD = 3830 m	Day 23

Drill ahead. Circ gas and weight up. Drill ahead. Continue to weigh up system in stages to 12.9 ppg.
Max gas recorded from bottoms up at 3630m of 5414 units or 108%. Weight up active to 12.4 ppg and treat mud with KOH, Biocide and maintain Glydril Conc. Run flow over two shakers only.

Drill ahead.

4/11/2004	TD = 3914 m	Day 24

Drill ahead and increase mud weight in small incriments following gas peaks following connections. Drill to the section TD of 3914 m and increase mud weight to 13.2ppg. Increase mud weight in stages to 13.9 ppg in order to counter gas influx. Wiper trip to shoe, pull 9 stands. Poss. gain RIH to TD. Circ.and raise MW to 14.1 ppg.
Record increasing gels and FL. Condition premix for weight, add caustic and Pac Ul .Bleed approx 400 bbls of new mud into the active. Divert the corresponding volume into pit 1. Add 5 % Glydril to the new volume. Add Glute 25 and OS-1 to active. Gels decreasing by last report.

Drill to the section TD raising mud weight following connections. Circulate BU at the TD of 3914.5m.

5/11/2004	TD = 3914 m	Day 25

Finish circulating BU and POOH without pumps to log. No overpull or drag. Hole appears in good condition. Start logging programe. Perform first Schlumberger logging run POOH.
No mud treatment necessary.

Circulate clean and POOH to log.

6/11/2004	TD = 3914 m	Day 26

POOH with logging string. RIH with 8.5" BHA for wiper trip. Broke circulation at 2538m, continued RIH to 2700m, washed and reamed down to 3150m. RIH to bottom, washed and reamed last stand. Circulated to even mud weight. Flowcheck. POOH.
Added Barite to maintain mud weight when circulating off bottom. Dumped contaminated mud from pits.

7/11/2004	TD = 3914 m	Day 27

Continued POOH. Rig up Schlumberger and run MDT log. POOH due to inability to seal packer on wellbore. RIH and restart log.
Received 10 sks OS-1 to correct no. received on 4 th Nov.

8/11/2004	TD = 3914 m	Day 28

Continued with wireline logging operations. Attempted to run sidewall corer tool. Gain noticed in trip tank. POOH and rig down wireline. RIH for wiper trip.
Conditioned surface volume before offloading to boat 463 bbls @ 9.6 ppg for storage for use on Amrit-1. Treated reserve mud with biocide.
Received 42 MT Barite from Lady Astrid. Cut back weight of reserve pit #5 in preparation for P/A. Gained 49 bbls while logging; possibly from downhole influx of water.

9/11/2004	TD = 3914 m	Day 29

RIH to bottom, and circulate out suspected water influx. Maintained active weight to 1.69SG with barite while slow circulating. POOH to shoe, slip and cut, RIH to bottom to circulate once more to even 1.69 SG system weight. POOH Prep. to disp. Riser to 16.5 ppg mud before continuing with logging operations
Added barite to active to maintain mud weight as water influx returned to surface (lowest MW returned was 1.53 SG). Built slugs for POOH.
Received 50 MT Barite from Lady Astrid. Built 16.5 ppg in prep. to displace riser. Mud weights even on second trip to TD. 23 bbls lost downhole during trip.

10/11/2004	TD = 3914 m	Day 30

POOH without displacing riser to 16.5ppg. Continued with wireline operations. Prepare to P/A well.
Received 16 x 180 mesh screens, 16 x 210 mesh screns and 24 cans KOH. Adjusted usage of Polypac UL (6 previously used). 24 bbls lost downhole over past 24 hrs while logging.

11/11/2004	TD = 3914 m	Day 31

Completed logging program. RIH with cement stinger and set 3 cement plugs on bottom. Circulated to even mud weight after each plug. Dumping interface at surface. Prepare to POOH and run cement retainer on DP.
No discrete cement observed when circulating from top of plugs. In each case water spacer strung out resulting in long interface which was dumped.

12/11/2004	TD = 3914 m	Day 32

Circulated above 3rd plug up to 3314m. POOH to pick up cement retainer. RIH with cement retainer on drill pipe. Cemented Retainer at 2508m and displaced well to inhibited mud.
POOH .
Dumped mud on circulation from 3rd plug.
Cut back mud to 9.1 for displacement of top 250m of hole prior to cutting casing.
Displaced casing volume to WBM treated with corrosion inhibitors Conqor 303A and Glute 25.

Price list has been amended to correct, resulting in an overall reduction in the chemical cost as shown on previous mud reports.

13/11/2004	TD = 3914 m	Day 33

POOH to 250m, displaced system above 250m to 9.1ppg WBM in preparation for cutting 9 5/8" casing. Pulled wear bushing, and cut casing. POOH.
Displaced hole to 9.1ppg above 250m. Diluted further volume of 14.1ppg to 9.1 ppg with water to give a circulating system for cutting casing.

14/11/2004	TD = 3914 m	Day 34

RIH and set 13 3/8" cmt retainer at 235m and pressure tested. Displaced well and riser to seawater prior to setting final cement plug to 185m. POOH. Rig up to pull BOPs and riser.
Displaced well to seawater, dumping displaced 9.1ppg fluid.

15/11/2004	TD = 3914 m	Day 35

Pulling BOPs and riser. Pick up cutting tool and RIH to cut 13 3/8" casing. Cut casing and POOH.

16/11/2004	TD = 3914 m	Day 36

Cut casing, recovered wellhead and PGB. Currently pulling last anchors. Well concluded at Midnight, changed over to Amrit-1.

DRILLING FLUIDS RECAP FOR SANTOS LIMITED
CALLISTER 1

COST
BY
INTERVAL

MI SWACO

PRODUCT SUMMARY

Operator : Santos Ltd
Well Name : Callister-1
Contractor : Transocean

Field/Area : Vic/P51
Description : Exploration
Location : Otway Basin, Vict.

SUMMARY OF PRODUCT USAGE FOR INTERVAL 12/10/2004 - 14/10/2004, 0 - 192 m

WATER-BASED MUD	SIZE	AMOUNT	UNIT COST ($)	PROD COST ($)
1 - M-I GEL	1 MT BK	62	228.67	14177.54
2 - CAUSTIC SODA	25 KG CN	1	20.46	20.46
3 - SODA ASH	25 KG BG	14	13.04	182.56
4 - CALCIUM CHLORIDE	25 KG BG	42	11.54	484.68
SUB TOTAL:				14865.24
TAX:				0.00
WATER-BASED MUD TOTAL COST:				14865.24
TOTAL MUD COST FOR INTERVAL:				14865.24

MI SWACO ONE-TRAX

Operator : Santos Ltd
Well Name : Callister-1
Field/Area : Vic/P51
Description : Exploration
Location : Otway Basin, Vict.

Cost Analysis

BREAKDOWN OF COST BY PRODUCT GROUP 12/10/2004 - 14/10/2004, 0 - 192 m

Water-Based Mud Products	$	%
1-Common Chemicals	687.70	4.6
2-Visc/Fluid Loss	14177.54	95.4
Water-Based Mud Total Cost: $	14865.24	100.0

Water-Based Mud

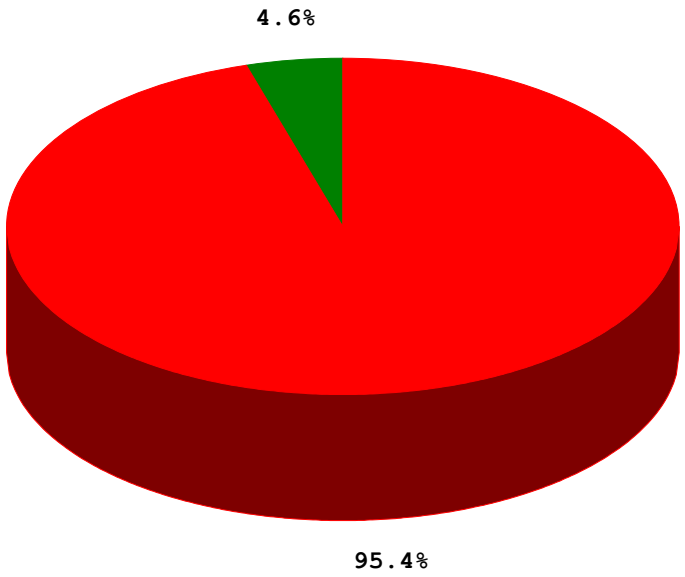

MI SWACO

PRODUCT SUMMARY

Operator : Santos Ltd
Well Name : Callister-1
Contractor : Transocean

Field/Area : Vic/P51
Description : Exploration
Location : Otway Basin, Vict.

SUMMARY OF PRODUCT USAGE FOR INTERVAL 15/10/2004 - 17/10/2004, 192 - 787.5 m

WATER-BASED MUD	SIZE	AMOUNT	UNIT COST ($)	PROD COST ($)
1 - M-I BAR BULK	1 MT BK	5	210.00	1050.00
2 - M-I GEL	1 MT BK	14	228.67	3201.38
3 - SODA ASH	25 KG BG	2	13.04	26.08
4 - LIME	20 KG BG	6	10.06	60.36
5 - KCl 99% (BIG BAG)	1 MT BG	1	430.06	430.06
SUB TOTAL:				4767.88
TAX:				0.00
WATER-BASED MUD TOTAL COST:				4767.88
TOTAL MUD COST FOR INTERVAL:				4767.88

MI SWACO ONE-TRAX

Operator : Santos Ltd
Well Name : Callister-1
Field/Area : Vic/P51
Description : Exploration
Location : Otway Basin, Vict.

Cost Analysis

BREAKDOWN OF COST BY PRODUCT GROUP 15/10/2004 - 17/10/2004, 192 - 787.5 m

Water-Based Mud Products	$	%
1-Common Chemicals	516.50	10.8
2-Visc/Fluid Loss	3201.38	67.1
3-Weight Material	1050.00	22.0
Water-Based Mud Total Cost: $	4767.88	100.0

Water-Based Mud

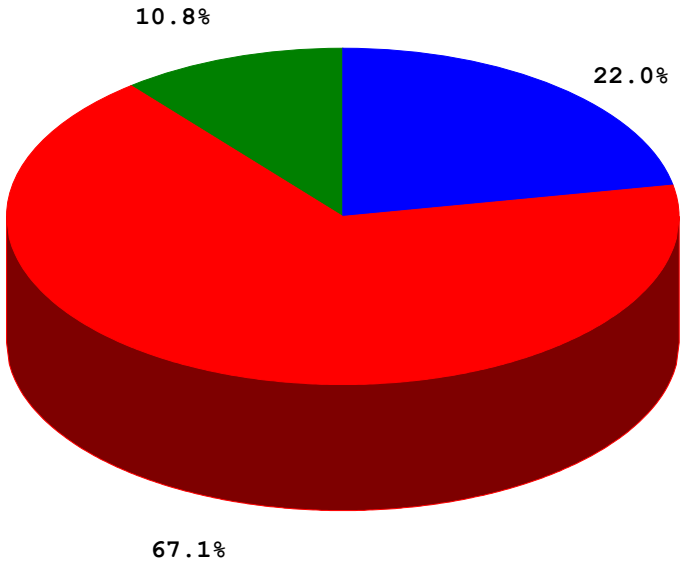

MI SWACO

PRODUCT SUMMARY

Operator : Santos Ltd
Well Name : Callister-1
Contractor : Transocean

Field/Area : Vic/P51
Description : Exploration
Location : Otway Basin, Vict.

SUMMARY OF PRODUCT USAGE FOR INTERVAL 18/10/2004 - 28/10/2004, 787.5 - 2550 m

WATER-BASED MUD	SIZE	AMOUNT	UNIT COST ($)	PROD COST ($)
1 - M-I BAR BULK	1 MT BK	4	210.00	840.00
2 - CAUSTIC SODA	25 KG CN	1	20.46	20.46
3 - SODA ASH	25 KG BG	28	13.04	365.12
4 - KCl 99% (BIG BAG)	1 MT BG	96	430.06	41285.76
5 - POTASSIUM HYDROXIDE	25 KG CN	36	31.28	1126.08
6 - DEFOAM A (NAPCO)	5 GA CN	1	68.59	68.59
7 - DUO-VIS	25 KG BG	148	227.00	33596.00
8 - POLYPAC UL	25 KG BG	214	90.00	19260.00
9 - OS-1	25 KG BG	36	33.54	1207.44
10 - CITRIC ACID	25 KG BG	18	36.79	662.22
11 - PHPA POLYPLUS	25 KG BG	110	85.80	9438.00
12 - SODIUM BICARBONATE	25 KG BG	22	10.64	234.08

SUB TOTAL:	108103.75
TAX:	0.00
WATER-BASED MUD TOTAL COST:	108103.75

TOTAL MUD COST FOR INTERVAL:	108103.75

MI SWACO ONE-TRAX

Operator : Santos Ltd
Well Name : Callister-1
Field/Area : Vic/P51
Description : Exploration
Location : Otway Basin, Vict.

Cost Analysis

BREAKDOWN OF COST BY PRODUCT GROUP 18/10/2004 - 28/10/2004, 787.5 - 2550 m

Water-Based Mud Products	$	%
1-Common Chemicals	44969.75	41.6
2-Encapsulator	9438.00	8.7
3-Visc/Fluid Loss	52856.00	48.9
4-Weight Material	840.00	0.8
Water-Based Mud Total Cost: $	108103.75	100.0

Water-Based Mud

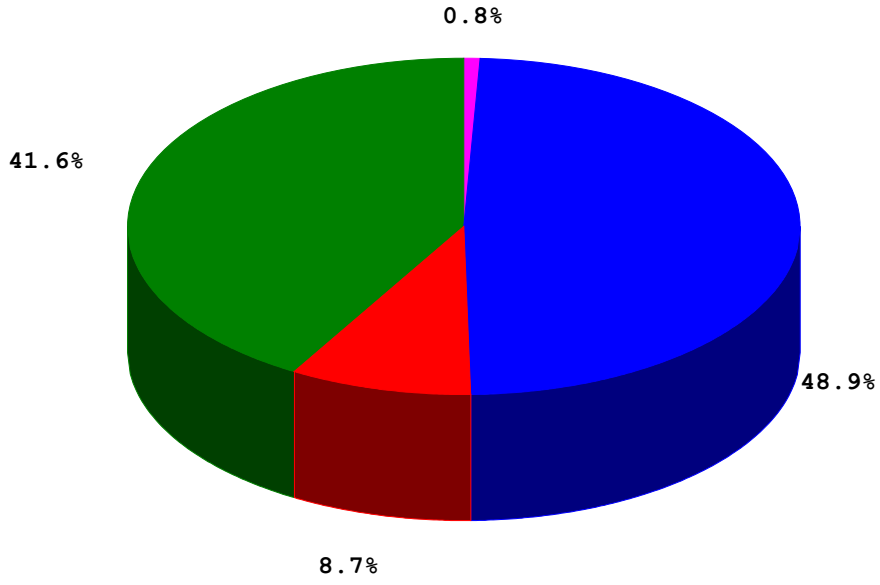

MI SWACO

PRODUCT SUMMARY

Operator : Santos Ltd
Well Name : Callister-1
Contractor : Transocean
Field/Area : Vic/P51
Description : Exploration
Location : Otway Basin, Vict.

SUMMARY OF PRODUCT USAGE FOR INTERVAL 29/10/2004 - 16/11/2004, 2550 - 3914 m

WATER-BASED MUD	SIZE	AMOUNT	UNIT COST ($)	PROD COST ($)
1 - M-I BAR BULK	1 MT BK	367	210.00	77070.00
2 - CAUSTIC SODA	25 KG CN	10	20.46	204.60
3 - KCl 99% (BIG BAG)	1 MT BG	24	430.06	10321.44
4 - POTASSIUM HYDROXIDE	25 KG CN	12	31.28	375.36
5 - DEFOAM A (NAPCO)	5 GA CN	22	68.59	1508.98
6 - DUO-VIS	25 KG BG	27	227.00	6129.00
7 - POLYPAC UL	25 KG BG	60	90.00	5400.00
8 - OS-1	25 KG BG	20	33.54	670.80
9 - CITRIC ACID	25 KG BG	22	36.79	809.38
10 - PHPA POLYPLUS	25 KG BG	21	85.80	1801.80
11 - SODIUM BICARBONATE	25 KG BG	26	10.64	276.64
12 - GLUTE 25	25 LT CN	18	93.68	1686.24
13 - GLYDRIL MC	200 KG DM	108	371.49	40120.92
14 - Conqor A303	55 GA DM	2	380.36	760.72

SUB TOTAL:	147135.88
TAX:	0.00
WATER-BASED MUD TOTAL COST:	147135.88

TOTAL MUD COST FOR INTERVAL:	147135.88

MI SWACO ONE-TRAX

Operator : Santos Ltd
Well Name : Callister-1
Field/Area : Vic/P51
Description : Exploration
Location : Otway Basin, Vict.

Cost Analysis

BREAKDOWN OF COST BY PRODUCT GROUP 29/10/2004 - 16/11/2004, 2550 - 3914 m

Water-Based Mud Products	$	%
1-Common Chemicals	56735.08	38.6
2-Encapsulator	1801.80	1.2
3-Visc/Fluid Loss	11529.00	7.8
4-Weight Material	77070.00	52.4
Water-Based Mud Total Cost: $	147135.88	100.0

Water-Based Mud

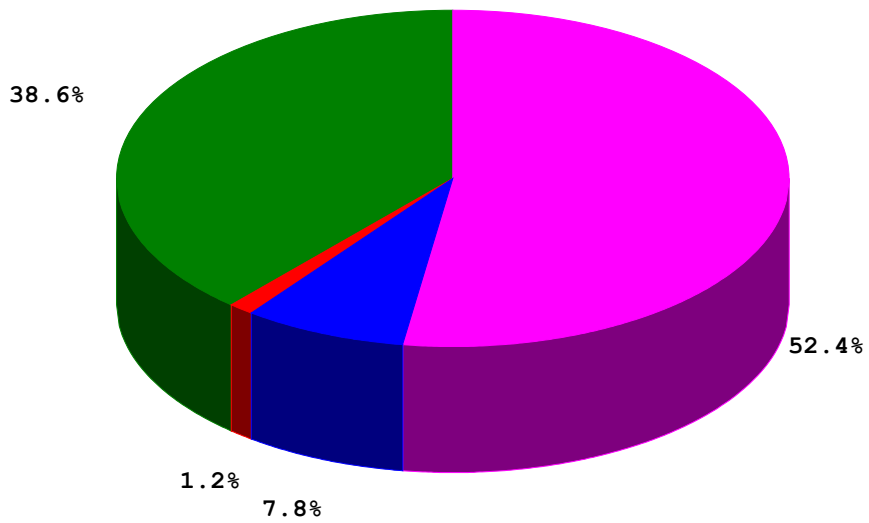

DRILLING FLUIDS RECAP FOR SANTOS LIMITED
CALLISTER 1

DAILY VOLUME
SUMMARY SHEET

Santos Ltd.

Callister-1

36" hole Seawater/PHG Sweeps

Hole volumes (sea water) not included in this section.

	Mud Volume Status bbl					Mud Volume Built bbl						Mud Volume Lost bbls						
Date 2004	Depth	Hole	Surf Active	Res	Total Vol	Water	Mud Received	Mud Built	Bar	Daily Total	Cum Built	Solids Equip	Surf	Dump	Hole	Sweeps Plugs	Daily Total	Cummul Lost
12-Oct	0			614	614	591		23		614	614						0	0
13-Oct	192			2112	2112	2404		73		2477	3091					979	979	979
14-Oct	192		85	2758	2843	671		60		731	3822							979

17.5"" Hole Seawater/PHG Sweeps

Hole volumes (sea water) not included in this section.

	Mud Volume Status bbl					Mud Volume Built bbls						Mud Volume Lost bbls						
Date 2004	Depth	Hole	Surf Active	Res	Total Vol	Water	Mud Received	Mud Built	Bar	Daily Total	Cum Built	Solids Equip	Surf	Dump	Hole	Sweeps Plugs	Daily Total	Cummul Lost
15-Oct	500		87	2363	2450	540	2845	35		3420	3420			970			970	970
16-Oct	787		87	505	592	300		11		311	3731			2169			2169	3139
17-Oct	787		87		87					0	3731			505			505	3644

12 1/4" Hole KCl/PHPA/Polymer

	Mud Volume Status bbls					Mud Volume Builtbbls						Mud Volume Lost bbls						
Date 2004	Depth	Hole	Surf Active	Res	Total Vol	Water	Mud Received	Mud Built	Bar	Daily Total	Cum Built	Solids Equip	Surf	Dump	Hole	Sweeps Plugs	Daily Total	Cummul Lost
17-Oct	787			1434	1434	1434				1434	1434						0	0
18-Oct	787		1	2564	2565	1120		11		1131	2565						0	0
19-Oct	787		491	2189	2680	115				115	2680						0	0
20-Oct	875	505	632	1258	2395	2		3		5	2685	121		169			290	290
21-Oct	991	515	688	1851	3054	1010		78		1088	3773	172	7	250			429	719
22-Oct	1385	737	521	1834	3092	551		37		588	4361	350		200			550	1269
23-Oct	1889	968	526	1785	3279	1120		58		1178	5539	480		511			991	2260
24-Oct	2060	1046	543	1942	3531	557		32		589	6128	89		248			337	2597
25-Oct	2520	1255	637	1201	3093	622		38		660	6788	890		208			1098	3695
26-Oct	2550	1363	458	1090	2911	1				1	6789	47		60	76		183	3878
27-Oct	2550	1322	258	1090	2670					0	6789			182	59		241	4119
28-Oct	2550	771	478	1041	2290					0	6789				380		380	4499

Santos Ltd.

Callister-1

8 1/2" Hole KCL/PHPA/GLYGOL

Mud received from 12 1/4" section 2375

	Mud Volume Status bbls					Mud Volume Built bbls							Mud Volume Lost bbls							
Date 2003	Depth	Hole	Surf Active	Res	Total Vol	Water	Mud Received	Mud Built	Chemical	Bar	Daily Total	Cum Built	Solids Equip	Trips	Dump Inject	Hole	Sweeps Plugs	Backload	Daily Total	Cummul Lost
29-Oct	2550	684	756	1486	2926	548	2375		38		2961	2961	33						33	33
30-Oct	2662	738	646	1595	2979				99		99	3060	46						46	79
31-Oct	2900	775	558	1668	3001	26			64		90	3150	68						68	147
1-Nov	3392	859	641	1494	2994					109	109	3259	116						116	263
2-Nov	3630	909	743	1397	3049					96	96	3355	41						41	304
3-Nov	3830	950	680	1470	3100					73	73	3428	22						22	326
4-Nov	3914	968	710	1603	3281	48			16	155	219	3647	38						38	364
5-Nov	3914	1081	655	1566	3302	15				6	21	3668							0	364
6-Nov	3914	969	726	1591	3286	20				14	34	3702	12		38				50	414
7-Nov	3914	1080	666	1560	3306	20					20	3722							0	414
8-Nov	3914	1055	782	1555	3392	537			12		549	4271						463	463	877
9-Nov	3914	1053	535	1864	3452					83	83	4354				23			23	900
10-Nov	3914	1082	499	1864	3445				1	16	17	4371				24			24	924
11-Nov	3914	848	617	1266	2731					8	8	4379			245			477	722	1646
12-Nov	3914	707	691	532	1930	185			3		188	4567			89			900	989	2635
13-Nov	3914	754	478	28	1260	171					171	4738			841				841	3476
14-Nov	3914				0						0	4738			1260				1260	4736

DRILLING FLUIDS RECAP FOR SANTOS LIMITED
CALLISTER 1

TOTAL
MATERIAL
COST

MI SWACO

PRODUCT SUMMARY

Operator : Santos Ltd
Well Name : Callister-1
Contractor : Transocean

Field/Area : Vic/P51
Description : Exploration
Location : Otway Basin, Vict.

SUMMARY OF PRODUCT USAGE FOR INTERVAL 12/10/2004 - 16/11/2004, 0 - 3914 m

WATER-BASED MUD	SIZE	AMOUNT	UNIT COST ($)	PROD COST ($)
1 - M-I BAR BULK	1 MT BK	376	210.00	78960.00
2 - M-I GEL	1 MT BK	76	228.67	17378.92
3 - CAUSTIC SODA	25 KG CN	12	20.46	245.52
4 - SODA ASH	25 KG BG	44	13.04	573.76
5 - LIME	20 KG BG	6	10.06	60.36
6 - KCl 99% (BIG BAG)	1 MT BG	121	430.06	52037.26
7 - POTASSIUM HYDROXIDE	25 KG CN	48	31.28	1501.44
8 - CALCIUM CHLORIDE	25 KG BG	42	11.54	484.68
9 - DEFOAM A (NAPCO)	5 GA CN	23	68.59	1577.57
10 - DUO-VIS	25 KG BG	175	227.00	39725.00
11 - POLYPAC UL	25 KG BG	274	90.00	24660.00
12 - OS-1	25 KG BG	56	33.54	1878.24
13 - CITRIC ACID	25 KG BG	40	36.79	1471.60
14 - PHPA POLYPLUS	25 KG BG	131	85.80	11239.80
15 - SODIUM BICARBONATE	25 KG BG	48	10.64	510.72
16 - GLUTE 25	25 LT CN	18	93.68	1686.24
17 - GLYDRIL MC	200 KG DM	108	371.49	40120.92
18 - Conqor A303	55 GA DM	2	380.36	760.72

SUB TOTAL:	274872.75
TAX:	0.00
WATER-BASED MUD TOTAL COST:	274872.75
TOTAL MUD COST FOR INTERVAL:	274872.75

MI SWACO ONE-TRAX

Operator : Santos Ltd
Well Name : Callister-1
Field/Area : Vic/P51
Description : Exploration
Location : Otway Basin, Vict.

Cost Analysis

BREAKDOWN OF COST BY PRODUCT GROUP 12/10/2004 - 16/11/2004, 0 - 3914 m

Water-Based Mud Products	$	%
1-Common Chemicals	102909.03	37.4
2-Encapsulator	11239.80	4.1
3-Visc/Fluid Loss	81763.92	29.7
4-Weight Material	78960.00	28.7
Water-Based Mud Total Cost: $	274872.75	100.0

Water-Based Mud

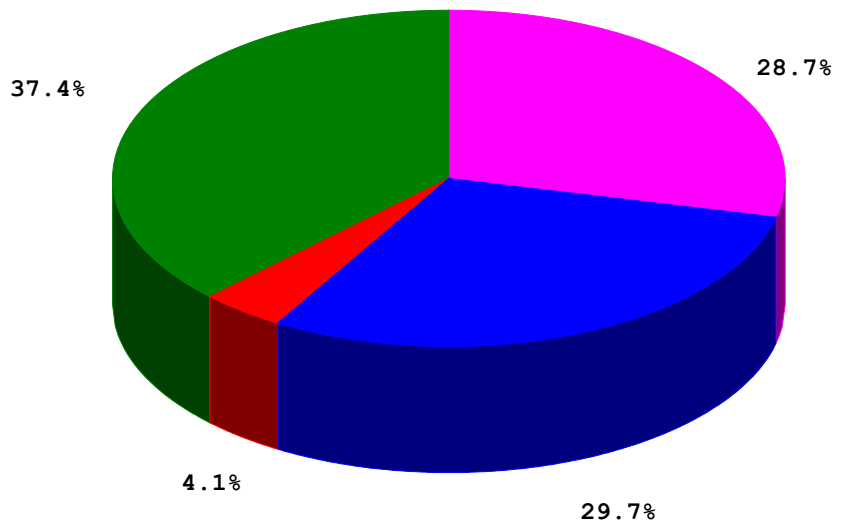

DRILLING FLUIDS RECAP FOR SANTOS LIMITED
CALLISTER 1

HYDRAULICS
REPORT

HYDRAULICS SUMMARY

Operator : Santos Ltd
Well Name : Callister-1
Contractor : Transocean

Field/Area : Vic/P51
Description : Exploration
Location : Otway Basin, Vict.

Date		13/10/2004	14/10/2004	15/10/2004	16/10/2004	17/10/2004	19/10/2004	20/10/2004	21/10/2004
Depth	m	192	192	474	788	991	785	875	991
Days Since Spud		2	3	4	5	6	8	9	10
*RHEOLOGICAL PROPERTIES									
Mud Wt	sp.gr.	1.03	1.04	1.03	1.04	1.07	1.06	1.06	1.07
Plastic Visc	cP					15	15	12	15
Yield Point	lb/100ft²					20	20	15	20
3-rpm Rdg	Fann deg					9	10	6	9
np Value		.6194	.6194	.6194	.6194	.5146	.5146	.5305	.5146
Kp Value	lb•s^n/100ft²	1.5468	1.5468	1.5468	1.5468	1.5085	1.5085	1.0536	1.5085
na Value		.3731	.3731	.3731	.3731	.2277	.1977	.2416	.2277
Ka Value	lb•s^n/100ft²	5.8056	5.8056	5.8056	5.8056	6.6235	7.7291	4.3166	6.6235
*FLOW DATA									
Flow Rate	gal/min	0	0	1090	0	0	0	885	0
Pump Pressure	psi	0	0	2300	0	0	0	1800	0
Pump	hhp	*	*	1463	*	*	*	929	*
*PRESSURE LOSSES									
Drill String	psi	*	*		*	*	*	853	*
Bit	psi	*	*		*	*	*	915	*
Annulus	psi	*	*		*	*	*	23	*
Total System	psi	*	*		*	*	*	1791	*
*BIT HYDRAULICS									
Nozzles	1/32"		3x22	3x22			9x11	9x11	5x14
Nozzles	1/32"		20	20					
Bit Pressure	%	*	*		*	*	*	51	*
Bit	hhp	*	*		*	*	*	472	*
Bit HSI	(index)	*	*	.	*	*	*	4.01	*
Jet Velocity	ft/s	*	*	246	*	*	*	340	*
Impact Force	lbf	*	*		*	*	*	1377	*
DRILL COLLARS ANNULUS									
Velocity	ft/min	*	*	124	*	*	*	363	*
Critical Vel	ft/min	*	*		*	*	*	300	*
Reynolds Number		*	*		*	*	*	3677	*
Crit Re (Lam - Tran)		*	*	2621	*	*	*	2743	*
*DRILL PIPE ANNULUS									
Velocity	ft/min	*	*	95	*	*	*	252	*
Critical Vel	ft/min	*	*		*	*	*	283	*
Reynolds Number		*	*		*	*	*	2154	*
Crit Re (Lam - Tran)		*	*	2621	*	*	*	2743	*
*HOLE CLEANING									
Slip Velocity	ft/min	*	*	8	*	*	*	21	*
Rising Velocity	ft/min	*	*	87	*	*	*	231	*
Lifting Capacity	%	*	*	91	*	*	*	92	*
Cutting Conc	%	*	*	1.13	*	*	*	0.97	*
Penetration Rate	m/h	0	0	16.5	0	0	0	23.4	0
CASING SHOE PRESSURES									
ECD	sp.gr.	*	*	1.69	*	*	*	1.08	*
ECD+Cuttings	sp.gr.	*	*	1.7	*	*	*	1.09	*
TOTAL DEPTH PRESSURES									
ECD	sp.gr.	*	*	1.69	*	*	*	1.08	*
ECD+Cuttings	sp.gr.	*	*	1.7	*	*	*	1.09	*

HYDRAULICS SUMMARY

Operator : Santos Ltd
Well Name : Callister-1
Contractor : Transocean

Field/Area : Vic/P51
Description : Exploration
Location : Otway Basin, Vict.

Date		22/10/2004	23/10/2004	24/10/2004	25/10/2004	26/10/2004	27/10/2004	28/10/2004	29/10/2004
Depth	m	1385	1871	2037	2455	2550	2550	2550	2550
Days Since Spud		11	12	13	14	15	16	17	18
*RHEOLOGICAL PROPERTIES									
Mud Wt	sp.gr.	1.09	1.08	1.08	1.09	1.09	1.09	1.09	1.09
Plastic Visc	cP	13	14	16	15	14	14	13	14
Yield Point	lb/100ft²	26	25	20	23	24	25	26	24
3-rpm Rdg	Fann deg	10	9	8	8	8	8	9	9
np Value		.415	.4425	.5305	.48	.4525	.4425	.415	.4525
Kp Value	lb•s^n/100ft²	3.127	2.6345	1.4048	2.032	2.4119	2.6345	3.127	2.4119
na Value		.2497	.2797	.2752	.3012	.2885	.2885	.2549	.2416
Ka Value	lb•s^n/100ft²	7.1006	6.0849	5.4486	5.2228	5.3319	5.3319	6.3362	6.4748
*FLOW DATA									
Flow Rate	gal/min	1154	855	855	1098	1098	0	0	0
Pump Pressure	psi	2500	2500	2500	2500	2500	0	0	2100
Pump	hhp	1683	1247	1247	1601	*	*	*	*
*PRESSURE LOSSES									
Drill String	psi	1510	1206	1423	2287	*	*	*	*
Bit	psi	1975	1074	1074	1788	*	*	*	*
Annulus	psi	67	82	78	108	*	*	*	*
Total System	psi	3551	2362	2574	4182	*	*	*	*
*BIT HYDRAULICS									
Nozzles	1/32"	5x14	5x14	5x14	5x14	5x14	5x14	5x14	5x14
Nozzles	1/32"								2x10
Bit Pressure	%	79	43	43	72	*	*	*	*
Bit	hhp	1329	536	536	1145	*	*	*	*
Bit HSI	(index)	11.28	4.55	4.55	9.72	*	*	*	*
Jet Velocity	ft/s	493	365	365	469	*	*	*	*
Impact Force	lbf	2676	1455	1455	2422	*	*	*	*
DRILL COLLARS ANNULUS									
Velocity	ft/min	473	350	350	450	*	*	*	*
Critical Vel	ft/min	402	406	376	396	*	*	*	*
Reynolds Number		3490	2010	2303	3203	*	*	*	*
Crit Re (Lam - Tran)		2901	2864	2743	2812	*	*	*	*
*DRILL PIPE ANNULUS									
Velocity	ft/min	226	168	168	215	*	*	*	*
Critical Vel	ft/min	350	347	322	333	*	*	*	*
Reynolds Number		1223	741	843	1225	*	*	*	*
Crit Re (Lam - Tran)		2901	2864	2743	2812	*	*	*	*
*HOLE CLEANING									
Slip Velocity	ft/min	16	16	17	17	*	*	*	*
Rising Velocity	ft/min	210	151	150	199	*	*	*	*
Lifting Capacity	%	93	90	90	92	*	*	*	*
Cutting Conc	%	1.4	1.95	1.96	1.49	*	*	*	*
Penetration Rate	m/h	45	45	45	45	45	45	45	0
CASING SHOE PRESSURES									
ECD	sp.gr.	1.11	1.1	1.1	1.11	*	*	*	*
ECD+Cuttings	sp.gr.	1.13	1.13	1.13	1.13	*	*	*	*
TOTAL DEPTH PRESSURES									
ECD	sp.gr.	1.12	1.11	1.11	1.12	*	*	*	*
ECD+Cuttings	sp.gr.	1.14	1.14	1.13	1.14	*	*	*	*

HYDRAULICS SUMMARY

Operator : Santos Ltd
Well Name : Callister-1
Contractor : Transocean

Field/Area : Vic/P51
Description : Exploration
Location : Otway Basin, Vict.

Date		30/10/2004	31/10/2004	1/11/2004	2/11/2004	3/11/2004	4/11/2004	5/11/2004	6/11/2004
Depth	m	2662	2900	3318	3630	3788	3914	3914	3914
Days Since Spud		19	20	21	22	23	24	25	26
*RHEOLOGICAL PROPERTIES									
Mud Wt	sp.gr.	1.13	1.15	1.38	1.44	1.54	1.67	1.69	1.69
Plastic Visc	cP	13	17	19	22	23	58	56	55
Yield Point	lb/100ft²	23	18	33	30	32	36	38	30
3-rpm Rdg	Fann deg	5	6	8	8	9	9	9	9
np Value		.4448	.5712	.4493	.509	.504	.6933	.6742	.7199
Kp Value	lb•s^n/100ft²	2.3977	1.06	3.3671	2.3203	2.5314	1.3287	1.4969	1.0182
na Value		.4225	.3573	.3769	.3769	.3527	.4774	.4774	.459
Ka Value	lb•s^n/100ft²	2.678	3.5746	4.6156	4.6156	5.4019	4.4078	4.4078	4.5421
*FLOW DATA									
Flow Rate	gal/min	0	709	628	628	633	491	0	0
Pump Pressure	psi	0	3595	3742	3742	4100	3110	0	0
Pump	hhp	*	1487	1371	1371	1514	891	*	*
*PRESSURE LOSSES									
Drill String	psi	*	1611	1586	1859	2073	2075	*	*
Bit	psi	*	542	511	533	637	416	*	*
Annulus	psi	*	347	533	566	608	888	*	*
Total System	psi	*	2500	2629	2957	3318	3379	*	*
*BIT HYDRAULICS									
Nozzles	1/32"	5x14	5x14	5x14	5x14	5x15	5x15	5x15	5x15
Nozzles	1/32"	2x10	2x10	2x10	2x10				
Bit Pressure	%	*	15	14	14	16	13	*	*
Bit	hhp	*	224	187	195	235	119	*	*
Bit HSI	(index)	*	3.95	3.3	3.44	4.15	2.1	*	*
Jet Velocity	ft/s	*	251	223	223	235	183	*	*
Impact Force	lbf	*	885	833	869	991	646	*	*
DRILL COLLARS ANNULUS									
Velocity	ft/min	*						*	*
Critical Vel	ft/min	*						*	*
Reynolds Number		*						*	*
Crit Re (Lam - Tran)		*	2688	2854	2773	2779	2520	*	*
*DRILL PIPE ANNULUS									
Velocity	ft/min	*	368	326	326	328	255	*	*
Critical Vel	ft/min	*	346	384	374	367	455	*	*
Reynolds Number		*	2790	1919	2003	2101	1005	*	*
Crit Re (Lam - Tran)		*	2688	2854	2773	2779	2520	*	*
*HOLE CLEANING									
Slip Velocity	ft/min	*	18	13	12	10	9	*	*
Rising Velocity	ft/min	*	350	313	314	318	246	*	*
Lifting Capacity	%	*	95	96	96	97	97	*	*
Cutting Conc	%	*	0.36	0.4	0.4	0.39	0.51	*	*
Penetration Rate	m/h	15	15	15	15	15	15	15	15
CASING SHOE PRESSURES									
ECD	sp.gr.	*	1.22	1.47	1.53	1.64	1.8	*	*
ECD+Cuttings	sp.gr.	*	1.22	1.48	1.54	1.65	1.8	*	*
TOTAL DEPTH PRESSURES									
ECD	sp.gr.	*	1.23	1.49	1.55	1.66	1.83	*	*
ECD+Cuttings	sp.gr.	*	1.24	1.49	1.55	1.66	1.83	*	*

HYDRAULICS SUMMARY

Operator : Santos Ltd
Well Name : Callister-1
Contractor : Transocean

Field/Area : Vic/P51
Description : Exploration
Location : Otway Basin, Vict.

Date		7/11/2004	8/11/2004	9/11/2004	10/11/2004	11/11/2004	12/11/2004		
Depth	m	3914	3914	3914	3914	3914	3314		
Days Since Spud		27	28	29	30	31	32		
*RHEOLOGICAL PROPERTIES									
Mud Wt	sp.gr.	1.69	1.69	1.69	1.69	1.69	1.69		
Plastic Visc	cP	54	47	42	43	36	37		
Yield Point	lb/100ft²	31	31	31	30	31	32		
3-rpm Rdg	Fann deg	9	8	8	8	11	10		
np Value		.7096	.6804	.6557	.6682	.6204	.6194		
Kp Value	lb•s^n/100ft²	1.086	1.1954	1.3052	1.2074	1.4925	1.5468		
na Value		.459	.459	.4444	.4367	.3381	.3731		
Ka Value	lb•s^n/100ft²	4.5421	4.0374	4.1349	4.1865	6.7613	5.8056		
*FLOW DATA									
Flow Rate	gal/min	0	0	0	0	0	0		
Pump Pressure	psi	0	0	0	0	0	0		
Pump	hhp	*	*	*	*	*	*		
*PRESSURE LOSSES									
Drill String	psi	*	*	*	*	*	*		
Bit	psi	*	*	*	*	*	*		
Annulus	psi	*	*	*	*	*	*		
Total System	psi	*	*	*	*	*	*		
*BIT HYDRAULICS									
Nozzles	1/32"	5x15							
Nozzles	1/32"								
Bit Pressure	%	*	*	*	*	*	*		
Bit	hhp	*	*	*	*	*	*		
Bit HSI	(index)	*	*	*	*	*	*		
Jet Velocity	ft/s	*	*	*	*	*	*		
Impact Force	lbf	*	*	*	*	*	*		
DRILL COLLARS ANNULUS									
Velocity	ft/min	*	*	*	*	*	*		
Critical Vel	ft/min	*	*	*	*	*	*		
Reynolds Number		*	*	*	*	*	*		
Crit Re (Lam - Tran)		*	*	*	*	*	*		
*DRILL PIPE ANNULUS									
Velocity	ft/min	*	*	*	*	*	*		
Critical Vel	ft/min	*	*	*	*	*	*		
Reynolds Number		*	*	*	*	*	*		
Crit Re (Lam - Tran)		*	*	*	*	*	*		
*HOLE CLEANING									
Slip Velocity	ft/min	*	*	*	*	*	*		
Rising Velocity	ft/min	*	*	*	*	*	*		
Lifting Capacity	%	*	*	*	*	*	*		
Cutting Conc	%	*	*	*	*	*	*		
Penetration Rate	m/h	15	0	0	0	0	0		
CASING SHOE PRESSURES									
ECD	sp.gr.	*	*	*	*	*	*		
ECD+Cuttings	sp.gr.	*	*	*	*	*	*		
TOTAL DEPTH PRESSURES									
ECD	sp.gr.	*	*	*	*	*	*		
ECD+Cuttings	sp.gr.	*	*	*	*	*	*		

DRILLING FLUIDS RECAP FOR SANTOS LIMITED
CALLISTER 1

DRILLING
FLUIDS
SUMMARY

DRILLING FLUIDS SUMMARY

Operator : Santos Ltd
Well Name : Callister-1
Contractor : Transocean

Field/Area : Vic/P51
Description : Exploration
Location : Otway Basin, Vict.

Date		12/10/2004	13/10/2004	14/10/2004	15/10/2004	16/10/2004	17/10/2004
Depth/TVD	m	/	192/192	192/192	474/474	787.5/787.5	991/991
Activity		Prepare to spud	'repare to cmt 30	RIH	Drill ahead	Run casing	Prepare to
Mud Type		Seawater/PH	Seawater/PH	Seawater/PH	Seawater/PH	Seawater/PH	PHPA/KCl
Hole Size	in	36	36	17.5	17.5	17.5	17.5
Circ Volume	bbl	614	2112	87	87	87	87
Flow Rate	gal/min	4	0	0	1090	0	0
Circ Pressure	psi	0	0	0	2300	0	0
Avg ROP	m/hr	0	0	0	16.5	0	0
Sample From			Pit 3	Pit #3	pit 2	Pit 2	Pit
Flow Line Temp	°F						n/a
Mud Weight	sp.gr.	@ °F	1.03 @ °F	1.04@ °F	1.03@ °F	1.04@ °F	1.07@ 80 °F
Funnel Viscosity	s/qt	>100	100+	100+	120	150	45
PV	cP						15
YP	lb/100ft²						20
R600/R300/R200		/ /	/ /	/ /	/ /	/ /	50/35/28
R100/R6/R3		/ /	/ /	/ /	/ /	/ /	20/11/9
10s/10m/30m Gel	lb/100ft²	//	//	//	//	//	5/8/12
API Fluid Loss	cc/30 min						8.4
HTHP Fluid Loss	cc/30 min						
Cake API/HT	1/32"	/	/	/	/	/	1/
Solids	%Vol						4.4
Oil/Water	%Vol	/	/	/	/	/	/95.6
Sand	%Vol						0.2
MBT	lb/bbl						4.0
pH				9.1			9
Alkal Mud (Pm)							0.4
Pf/Mf		/	/	0.2/0.8	/	/	0.1/0.75
Chlorides	mg/l			600			45000
Hardness Ca				40			
KCl	% WT						8.2
PHPA	lb/bbl						
Sulphite	ppm						
Glycol	%						
Daily Mud Cost	$	2136.27	7188.73	5540.24	3287.82	1480.06	0.00
Cuml Mud Cost	$	2136.27	9325.00	14865.24	18153.06	19633.12	19633.12
Sales Engineer		Chris A/Paul Ma	Chris A/Paul Ma	Chris A/Paul Ma	Chris A/Paul Ma	Chris A/Paul Ma	Chris A/Paul Ma
Products Used		M-I Gel / 9	M-I Gel / 29	M-I Gel / 24	M-I Gel / 14	BARBK / 5	
		soda / 6	NaOH / 1	soda / 4	soda / 2	KCl / 1	
			soda / 4		lime / 6		
			CaCl2 / 42				

REMARKS

12/10/2004: Prepare to spud Callister-1 with seawater and PHG sweeps.
13/10/2004: Make up 36" BHA, spud and drill to 192m. Run 30".
14/10/2004: Cement 30" conductor. Make up 17.5" BHA and RIH.
15/10/2004: Drill out cement and new hole to 500m with seawater and hi vis PHG sweeps.
16/10/2004: Drill ahead 17 1/2" hole to TD at 787.5m. Prepare to run 13 3/8" casing.
17/10/2004: Run and cement 13 3/8" casing. Rig uo and prepare to run BOPs

DRILLING FLUIDS SUMMARY

Operator : Santos Ltd
Well Name : Callister-1
Contractor : Transocean

Field/Area : Vic/P51
Description : Exploration
Location : Otway Basin, Vict.

Date		17/10/2004	18/10/2004	19/10/2004	20/10/2004	20/10/2004	21/10/2004
Depth/TVD	m	985/985	/	785/785	875/875	787/787	991/991
Activity		Prepare to	epare to land BO	RIH	Drill ahead	Drill ahead	RIH
Mud Type		PHPA/KCl	PHPA/KCl	PHPA/KCl	PHPA/KCl	PHPA/KCl	PHPA/KCl
Hole Size	in	17.5	12.25	12.25	12.25	12.25	12.25
Circ Volume	bbl	87	87	575	1221	1221	1288
Flow Rate	gal/min	0	0	0	885	885	0
Circ Pressure	psi	0	0	0	1800	1800	0
Avg ROP	m/hr	0	0	0	23.4	23.4	0
Sample From		FL		Pit 5	FL	Pit	Pit
Flow Line Temp	°F	105		NA	80	76	n/a
Mud Weight	sp.gr.	1.07@80 °F	@ °F	1.06@80 °F	1.06@ 80 °F	1.06@80 °F	1.07@ 85 °F
Funnel Viscosity	s/qt	46		54	43	46	46
PV	cP	15		15	12	9	15
YP	lb/100ft²	21		20	15	14	20
R600/R300/R200		51/36/30	/ /	50/35/27	39/27/19	32/23/19	50/35/28
R100/R6/R3		22/10/8	/ /	20/15/10	14/7/6	15/8/6	20/11/9
10s/10m/30m Gel	lb/100ft²	6/9/11	//	6/10/	6/9/15	7/10/12	6/10/12
API Fluid Loss	cc/30 min	8.6		9.6	8.4	9.4	8.4
HTHP Fluid Loss	cc/30 min						
Cake API/HT	1/32"	1/	/	1/	1/	1/	1/
Solids	%Vol	4.2		3.5	4.2	3.8	4.4
Oil/Water	%Vol	/95.8	/	0/96.5	/95.8	/96.2	/95.6
Sand	%Vol	0.25		0	0.3	Tr	0.25
MBT	lb/bbl	4.0		0	1.5		4.5
pH		9		8.9	10.0	11	9.0
Alkal Mud (Pm)		0.4		0.4	0.4	0.4	0.4
Pf/Mf		0.15/1	/	0.2/0.9	0.2/0.6	0.2/0.75	0.1/0.7
Chlorides	mg/l	43000		46000	38000	42000	45000
Hardness Ca				60	260	240	560
KCl	% WT	8.5		8	7.8	8	8.1
PHPA	lb/bbl				0.7	0.75	1.0
Sulphite	ppm						
Glycol	%						
Daily Mud Cost	$		15967.36	17626.10	1266.06		25535.03
Cuml Mud Cost	$		35600.48	53226.58	54492.64		80027.67
Sales Engineer		Chris A/Paul Ma	Chris A/Paul Ma	Chris A/Paul Ma	Chris A/Paul Ma	Chris A/Paul Ma	Chris A/Paul Ma
Products Used			soda / 9	KCl / 35	UL / 6		soda / 5
			DUO-VIS / 50	PHPA / 30	CA / 18		KCl / 20
			UL / 50		BICARB / 6		DFA / 1
							DUO-VIS / 43
							UL / 42
							PHPA / 36
							BICARB / 16

REMARKS

18/10/2004: Run and land BOP and Marine Riser.
19/10/2004: Run, land and test stack.
20/10/2004: MU 12 1/4" BHA and RIH and drill cement.Perform LOT and drill ahead.

21/10/2004: Drill ahead at 20-30m/hr to 991m. POOH. Change bit and RIH.

DRILLING FLUIDS SUMMARY

Operator : Santos Ltd
Well Name : Callister-1
Contractor : Transocean

Field/Area : Vic/P51
Description : Exploration
Location : Otway Basin, Vict.

Date		21/10/2004	22/10/2004	22/10/2004	23/10/2004	23/10/2004	24/10/2004
Depth/TVD	m	985/985	1385/1385	1043/1034	1871/ 1871	1469/1469	2037/2037
Activity		RIH	Drill ahead	Drill ahead	Drill Ahead	Drill Ahead	Drill Ahead
Mud Type		PHPA/KCl	PHPA/KCl	PHPA/KCl	PHPA/KCl	PHPA/KCl	PHPA/KCl
Hole Size	in	12.25	12.25	12.25	12.25	12.25	12.25
Circ Volume	bbl	1288	1342	1342	1578	1578	1673
Flow Rate	gal/min	0	1154	1154	855	855	855
Circ Pressure	psi	0	2500	2500	2500	2500	2500
Avg ROP	m/hr	0	45	45	45	45	45
Sample From		Pit 3	FL	FL	FL	FL	FL
Flow Line Temp	°F	92	104	98	108	106	111
Mud Weight	sp.gr.	1.07@90 °F	1.09 @102 °F	1.08@98 °F	1.08 @108 °F	1.08@ 106 °F	1.08@111 °F
Funnel Viscosity	s/qt	47	49	46	49	47	47
PV	cP	15	13	13	14	17	16
YP	lb/100ft²	21	26	19	25	21	20
R600/R300/R200		51/36/30	52/39/32	45/32/26	53/39/34	55/38/32	52/36/29
R100/R6/R3		22/10/8	24/11/10	19/9/8	24/12/9	24/11/9	21/11/8
10s/10m/30m Gel	lb/100ft²	6/9/	6/8/	5/8/	7/12/	7/14/	5/8/
API Fluid Loss	cc/30 min	8.6	8	8	5.8	6.8	4.8
HTHP Fluid Loss	cc/30 min						
Cake API/HT	1/32"	1/	1/	1/	1/	1/	1/
Solids	%Vol	4.2	6.5	6	5.5	6	6
Oil/Water	%Vol	/95.8	/93.5	/94	/94.5	/94	/94
Sand	%Vol	0.2	0.25	0.25	1.4	0.75	1.0
MBT	lb/bbl	4.0	6	4	5	5	4.5
pH		9.0	8.7	8.7	8.8	8.2	9.1
Alkal Mud (Pm)		0.4	0	0	0	0	0
Pf/Mf		0.15/1	0/1.4	0/1.4	0/1.4	0/1.4	0.1/1.4
Chlorides	mg/l	44000	46000	48000	46000	46000	44000
Hardness Ca		480	420	400	300	320	220
KCl	% WT	7	8	8.2	8	8	7.7
PHPA	lb/bbl	1.1	.883	1.01	0.93	0.96	1.26
Sulphite	ppm		32	34	70	50	75
Glycol	%						
Daily Mud Cost	$		9007.86		17491.76		9016.10
Cuml Mud Cost	$		89035.53		106527.29		115543.39
Sales Engineer		Chris A/Paul Ma	Chris A/Paul Ma	Chris A/Paul Ma	Chris A/A. Sim	Chris A/A. Sim	Chris A/A. Sim
Products Used			BARBK / 4		soda / 6		NaOH / 1
			soda / 2		KCl / 14		soda / 4
			KCl / 9		KOH / 15		KCl / 8
			DUO-VIS / 10		DUO-VIS / 15		KOH / 7
			UL / 20		UL / 60		DUO-VIS / 10
			OS-I / 6		OS-I / 12		UL / 16
					PHPA / 20		OS-I / 6
							PHPA / 16

REMARKS

22/10/2004: RIH. Slip and cut drill line. Drill ahead.

23/10/2004: Drill Ahead

24/10/2004: Drill ahead to 1917 and POOH to the shoe for repairs on the top drive.

DRILLING FLUIDS SUMMARY

Operator : Santos Ltd
Well Name : Callister-1
Contractor : Transocean

Field/Area : Vic/P51
Description : Exploration
Location : Otway Basin, Vict.

Date		24/10/2004	25/10/2004	25/10/2004	26/10/2004	27/10/2004	28/10/2004
Depth/TVD	m	1917/ 1917	2455/2455	2183/2183	2550/2550	2550/2550	2550/2550
Activity		Drill Ahead	Drill Ahead	Drill Ahead	Trip.	Run Casing	Run Wearbushing
Mud Type		PHPA/KCl	PHPA/KCl	PHPA/KCl	PHPA/KCl	PHPA/KCl	PHPA/KCl
Hole Size	in	12.25	12.25	12.25	12.25	12.25	12.25
Circ Volume	bbl	1673	1976	1976	1905	1664	1333
Flow Rate	gal/min	855	1098	1098	1098	0	0
Circ Pressure	psi	2500	2500	2500	2500	0	0
Avg ROP	m/hr	45	45	45	45	45	45
Sample From		FL	FL	FL	FL	FL	FL
Flow Line Temp	°F	111	110	110	112		
Mud Weight	sp.gr.	1.08@110 °F	1.09@104 °F	1.10@102 °F	1.09 @110 °F	1.09 @ °F	1.09 @ °F
Funnel Viscosity	s/qt	48	51	59	51	54	54
PV	cP	16	15	15	14	14	13
YP	lb/100ft²	21	23	32	24	25	26
R600/R300/R200		53/37/29	53/38/32	62/47/38	52/38/30	53/39/30	52/39/30
R100/R6/R3		22/11/8	23/10/8	28/12/7	22/10/8	22/10/8	22/10/9
10s/10m/30m Gel	lb/100ft²	5/8/	5/8/	6/8/	6/10/	7/10/	7/10/
API Fluid Loss	cc/30 min	3.8	5.5	5.8	5.6	5.4	5.6
HTHP Fluid Loss	cc/30 min						
Cake API/HT	1/32"	1/	1/	1/	1/	1/	1/
Solids	%Vol	6	6	8	7	7	7
Oil/Water	%Vol	/94	/94	/92	/93	/93	/93
Sand	%Vol	1.4	0.75	0.75	0.25	0.25	0.25
MBT	lb/bbl	4	6	4	6	6	6
pH		9	9.0	9.1	9.4	9.2	9.0
Alkal Mud (Pm)		0	0.2	0.8	0.6	0.6	0.5
Pf/Mf		0/1.1	0.1/1.4	0.18/1.1	0.18/1	0.16/1	0.16/1
Chlorides	mg/l	40000	46000	44000	44000	45000	45000
Hardness Ca		160	200	160	200	200	190
KCl	% WT	7.5	8	7	8	8	8
PHPA	lb/bbl	1.26	1.2	1.2	0.83	0.83	0.83
Sulphite	ppm	50	75	50	20	20	20
Glycol	%						
Daily Mud Cost	$		11679.44		514.04	0.00	0.00
Cuml Mud Cost	$		127222.83		127736.87	127736.87	127736.87
Sales Engineer		Chris A/A. Sim	Chris A/A. Sim	Chris A/A. Sim	Chris A/A. Sim	Chris A/A. Sim	Chris A/A. Sim
Products Used			soda / 2		KOH / 10		
			KCl / 10		OS-I / 6		
			KOH / 4				
			DUO-VIS / 20				
			UL / 20				
			OS-I / 6				
			PHPA / 8				

REMARKS

25/10/2004: Drill ahead

26/10/2004: Drill to section TD. POOH to log.
27/10/2004: Complete logging programme. Run 9 5/8" casing.
28/10/2004: RIH 9 5/8" casing

DRILLING FLUIDS SUMMARY

Operator : Santos Ltd
Well Name : Callister-1
Contractor : Transocean

Field/Area : Vic/P51
Description : Exploration
Location : Otway Basin, Vict.

Date		29/10/2004	30/10/2004	30/10/2004	31/10/2004	31/10/2004	1/11/2004
Depth/TVD	m	2550/2550	2662/2662	2574/2574	2900/2900	2663/2663	3318/3318
Activity		Drill cement	POOH	POOH	Drill Ahead.	Drill Ahead.	Drill ahead
Mud Type		PHPA/KCl	PHPA/KCl	PHPA/KCl	PHPA/KCl	PHPA/KCl	PHPA/KCl
Hole Size	in	8.5	8.5	8.5	8.5	8.5	8.5
Circ Volume	bbl	1441	1385	1385	1333	1333	1501
Flow Rate	gal/min	0	0	0	709	709	628
Circ Pressure	psi	2100	0	0	3595	3595	3742
Avg ROP	m/hr	0	15	15	15	15	15
Sample From		FL	FL	FL	FL	Pit 3	Flowline
Flow Line Temp	°F		112	114	114	NA	134
Mud Weight	sp.gr.	1.09 @ °F	1.13 @109 °F	1.13 @ 104 °F	1.15 @112 °F	1.13@96 °F	1.38@130 °F
Funnel Viscosity	s/qt	54	55	60	50	58	58
PV	cP	14	13	11	17	18	19
YP	lb/100ft²	24	23	22	18	18	33
R600/R300/R200		52/38/30	49/36/29	44/33/27	52/35/29	54/36/29	71/52/42
R100/R6/R3		21/10/9	22/7/5	19/7/4	21/7/6	21/8/5	30/10/8
10s/10m/30m Gel	lb/100ft²	7/9/	5/12/	5/14/	6/9/	6/10/	9/20/
API Fluid Loss	cc/30 min	5.6	5.0	5.6	4.6	4.2	4.2
HTHP Fluid Loss	cc/30 min						
Cake API/HT	1/32"	1/	1/	1/	1/	1/	1/
Solids	%Vol	7	7	8	8	8	15.5
Oil/Water	%Vol	/93	/93	/92	/92	/92	/84.5
Sand	%Vol	0.2	0.5	0.25	0.4	0.25	0.5
MBT	lb/bbl	5	7	7	10	6	8
pH		9.0	11.0	11.3	10.8	11	9.4
Alkal Mud (Pm)		0.5	1.8	1.9	1.2	1.2	0
Pf/Mf		0.16/1	0.2/1.8	0.4/1.8	0.2/1.6	0.3/1.8	0.1/1.5
Chlorides	mg/l	45000	44000	41000	43000	46000	45000
Hardness Ca		170	440	400	480	440	400
KCl	% WT	8	8	7	8	8	8
PHPA	lb/bbl	0.83	0.84	0.84	0.74	0.76	0.94
Sulphite	ppm	30	40	30	100	20	40
Glycol	%		5.2	3.7	5.0	5.2	5
Daily Mud Cost	$	9544.17	27781.86		10633.84		21550.47
Cuml Mud Cost	$	137281.04	165062.90		175696.74		197247.21
Sales Engineer		Chris A/A. Sim	Chris A/A. Sim	Chris A/A. Sim	Chris A/A. Sim	Chris A/A. Sim	Chris A/A. Sim
Products Used		KCl / 10	BARBK / 7		BARBK / 33		BARBK / 58
		KOH / 2	DFA / 4		KCl / 1		DFA / 13
		DUO-VIS / 10	CA / 11		OS-I / 9		DUO-VIS / 10
		UL / 20	Glycol / 69		Glycol / 8		UL / 1
		CA / 11					OS-I / 5
		PHPA / 6					PHPA / 8
		BICARB / 18					BICARB / 6
							Glycol / 14

REMARKS

29/10/2004: RU 8 1/2" BHA and RIH.Drill cement.
30/10/2004: Drill cement and carry out LOT. Drill ahead. POOH for a bit trip.

31/10/2004: POOH and change bit. RIH and drill ahead.

1/11/2004: Drill ahead. Add barite to increase mud weight as per programe.

DRILLING FLUIDS SUMMARY

Operator : Santos Ltd
Well Name : Callister-1
Contractor : Transocean

Field/Area : Vic/P51
Description : Exploration
Location : Otway Basin, Vict.

Date		1/11/2004	2/11/2004	2/11/2004	3/11/2004	3/11/2004	4/11/2004
Depth/TVD	m	3016/3016	3630/3528	3450/3450	3788/3788	3652/3652	3914/3914
Activity		Drill ahead	Drill ahead	Drill ahead	Drill Ahead	Drill Ahead	Circulate BU
Mud Type		PHPA/KCl	PHPA/KCl	PHPA/KCl	PHPA/KCl	PHPA/KCl	PHPA/KCl
Hole Size	in	8.5	8.5	8.5	8.5	8.5	8.5
Circ Volume	bbl	1501	1652	1652	1631	1631	1680
Flow Rate	gal/min	628	628	628	633	633	491
Circ Pressure	psi	3742	3742	3742	4100	4100	3110
Avg ROP	m/hr	15	15	15	15	15	15
Sample From		Pit 3	FL	FL	FL	FL	Active
Flow Line Temp	°F	123	132	130	131	121	140
Mud Weight	sp.gr.	1.26@120 °F	1.44@122 °F	1.39@120 °F	1.54@120 °F	1.46@120 °F	1.67@ 130 °F
Funnel Viscosity	s/qt	56	55	57	55	56	57
PV	cP	18	22	20	23	20	58
YP	lb/100ft²	26	30	30	32	32	36
R600/R300/R200		62/44/36	74/52/42	70/50/41	78/55/43	72/52/40	152/94/72
R100/R6/R3		26/8/6	30/10/8	30/10/8	31/11/9	30/10/8	48/13/9
10s/10m/30m Gel	lb/100ft²	7/13/	9/25/	9/24/	9/29/	9/26/	10/30/
API Fluid Loss	cc/30 min	4.8	4.8	5	5.9	5.8	4.8
HTHP Fluid Loss	cc/30 min						
Cake API/HT	1/32"	1/	1/	1/	1/	1/	1/
Solids	%Vol	12	17.5	16	20.5	18.5	23.5
Oil/Water	%Vol	/88	/82.5	/84	/79.5	/81.5	/76.5
Sand	%Vol	0.25	0.4	0.5	0.3	0.25	0.2
MBT	lb/bbl	6	10	10	12	10	10
pH		10.1	8.7	9.2	8.9	8.6	9.4
Alkal Mud (Pm)		0	0	0	0	0	0.4
Pf/Mf		0.2/1.6	0/1.2	0.2/1.6	0/1	0.1/0.9	0.1/1.2
Chlorides	mg/l	46000	52000	40000	51000	50000	51000
Hardness Ca		440	480	480	46	480	400
KCl	% WT	7.5	9.8	6.25	8	9	9
PHPA	lb/bbl	0.73	0.88	0.94	0.828	0.882	0.89
Sulphite	ppm	20	30	20	30	30	40
Glycol	%	5	5.1	6.2	5	5	5
Daily Mud Cost	$		13979.79		11894.72		28470.22
Cuml Mud Cost	$		211227.00		223121.72		251591.94
Sales Engineer		Chris A/A. Sim	Chris A/A. Sim	Chris A/A. Sim	Chris A/A. Sim	Chris A/A. Sim	Chris A/A. Sim
Products Used			BARBK / 39		BARBK / 41		BARBK / 105
			KCl / 10		KOH / 10		NaOH / 10
			GLUTE / 4		Glycol / 8		DFA / 4
			Glycol / 3				UL / 28
							OS-I / 6
							PHPA / 5
							GLUTE / 6
							Glycol / 6

REMARKS

2/11/2004: Drill ahead and increase mud weight.

3/11/2004: Drill ahead.

4/11/2004: Drill to the section TD raising mud weight following connections. Circulate BU at the TD of 3914.5m.

DRILLING FLUIDS SUMMARY

Operator : Santos Ltd
Well Name : Callister-1
Contractor : Transocean

Field/Area : Vic/P51
Description : Exploration
Location : Otway Basin, Vict.

Date		4/11/2004	5/11/2004	6/11/2004	7/11/2004	8/11/2004	9/11/2004
Depth/TVD	m	3864/3864	3914/3914	3914/3914	3914/3914	3914/3914	3914/ 3914
Activity		Circulate BU	Logging	POOH	Logging	Wiper Trip	POOH
Mud Type		PHPA/KCl	PHPA/KCl	PHPA/KCl	PHPA/KCl	PHPA/KCl	PHPA/KCl
Hole Size	in	8.5	8.5	8.5	8.5	8.5	8.5
Circ Volume	bbl	1680	1737	1696	1748	1839	1588
Flow Rate	gal/min	491	0	0	0	0	0
Circ Pressure	psi	3110	0	0	0	0	0
Avg ROP	m/hr	15	15	15	15	0	0
Sample From		FL	Pit 3	FL	Active	Active	Active
Flow Line Temp	°F	140	na	130	130	n/a	n/a
Mud Weight	sp.gr.	1.56 @120 °F	1.69 @110 °F	1.69 @120 °F	1.69 @120 °F	1.69@ °F	1.69@ °F
Funnel Viscosity	s/qt	56	57	54	54	58	60
PV	cP	27	56	55	54	47	42
YP	lb/100ft²	33	38	30	31	31	31
R600/R300/R200		87/60/48	150/94/72	140/85/66	139/85/65	125/78/61	115/73/57
R100/R6/R3		34/12/10	48/13/9	45/11/9	45/11/9	40/10/8	38/10/8
10s/10m/30m Gel	lb/100ft²	14/42/	10/30/	10/32/	10/34/	10/35/	9/29/
API Fluid Loss	cc/30 min	6.6	4.6	4.7	4.8	4.8	6.2
HTHP Fluid Loss	cc/30 min						
Cake API/HT	1/32"	1/	1/	1/	1/	1/	1/
Solids	%Vol	22	23.5	25.5	25.5	25.5	25.5
Oil/Water	%Vol	/78	/76.5	/74.5	/74.5	/74.5	/74.5
Sand	%Vol	0.25	0.25	0.4	0.25	0.25	0.5
MBT	lb/bbl	11	10	12	12	12	12
pH		8.7	9.4	9.3	9.1	9.2	8.8
Alkal Mud (Pm)		0	0.4	0.4	0.4	0.3	0.1
Pf/Mf		0.1/1.4	0.1/1.2	0.1/1	0.1/1.2	0.1/1.2	0.1/1.4
Chlorides	mg/l	48000	50000	50000	50000	52000	45000
Hardness Ca		440	400	400	400	420	440
KCl	% WT	8	9	9	9	9	9
PHPA	lb/bbl	0.828	0.88	0.88	0.88	0.811	0.781
Sulphite	ppm	20	20	20	20	30	30
Glycol	%	5	5	5	5	5	5
Daily Mud Cost	$		840.00	1958.59	0.00	3309.46	11550.00
Cuml Mud Cost	$		252431.94	254390.53	254390.53	257699.99	269249.99
Sales Engineer		Chris A/A. Sim	Aurisch/A. Sim	Nick Co/Alan Si	Nick Co/Alan Si	Nick Co/Alan Si	Nick Co/Alan Si
Products Used			BARBK / 4	BARBK / 9		KCl / 3	BARBK / 55
				DFA / 1		DUO-VIS / 4	
						UL / 5	
						PHPA / 2	
						BICARB / 2	
						GLUTE / 5	

REMARKS

5/11/2004: Circulate clean and POOH to log.
6/11/2004:
7/11/2004:
8/11/2004:
9/11/2004:

DRILLING FLUIDS SUMMARY

Operator : Santos Ltd
Well Name : Callister-1
Contractor : Transocean

Field/Area : Vic/P51
Description : Exploration
Location : Otway Basin, Vict.

Date		9/11/2004	10/11/2004	11/11/2004	12/11/2004	13/11/2004	14/11/2004
Depth/TVD	m	3914/ 3914	3914/ 3914	3914/ 3914	3314/3314	/	/
Activity		POOH	Logging	P & A	P & A	P & A	Pulling BOPs
Mud Type		PHPA/KCl	PHPA/KCl	PHPA/KCl	PHPA/KCl	PHPA/KCl	PHPA/KCl
Hole Size	in	8.5	8.5	8.5	8.5	8.5	8.5
Circ Volume	bbl	1588	1581	1465	1398	1232	
Flow Rate	gal/min	0	0	0	0	0	0
Circ Pressure	psi	0	0	0	0	0	0
Avg ROP	m/hr	0	0	0	0	0	0
Sample From		Active	Active	Active	Active		
Flow Line Temp	°F	n/a	n/a	n/a	n/a		
Mud Weight	sp.gr.	1.69@ °F	1.69@ °F	1.69@ °F	1.69@ °F	@ °F	@ °F
Funnel Viscosity	s/qt	60	60				
PV	cP	40	43	36	37		
YP	lb/100ft²	30	30	31	32		
R600/R300/R200		110/70/55	116/73/56	103/67/51	106/69/53	/ /	/ /
R100/R6/R3		38/10/8	37/10/8	36/13/11	37/12/10	/ /	/ /
10s/10m/30m Gel	lb/100ft²	9/27/	9/29/	12/37/	11/34/	//	//
API Fluid Loss	cc/30 min	6.8	6.2	8.2	8.4		
HTHP Fluid Loss	cc/30 min						
Cake API/HT	1/32"	1/	1/	1.5/	1.5/	/	/
Solids	%Vol	25	25.5	25.5	25.5		
Oil/Water	%Vol	/75	/74.5	/74.5	/74.5	/	/
Sand	%Vol	0.5	0.5	0.5	0.5		
MBT	lb/bbl	12.5	12	12	12		
pH		8.9	8.8	10.5	10.5		
Alkal Mud (Pm)		0.1	0.1				
Pf/Mf		0.1/1.8	0.1/1.2	/	/	/	/
Chlorides	mg/l	45000	45000	43000	43000		
Hardness Ca		400	420	550	600		
KCl	% WT	9	9	9	9		
PHPA	lb/bbl	0.781	0.781	0.781	0.781		
Sulphite	ppm	30	30	30	30		
Glycol	%	5	5	5	5		
Daily Mud Cost	$		2943.68	1050.00	1402.08	227.00	0.00
Cuml Mud Cost	$		272193.67	273243.67	274645.75	274872.75	274872.75
Sales Engineer		Nick Co/Alan Si	Nick Co/Alan Si	Nick Co/Alan Si	Nick Co/Alan Si	Nick Cooper	Nick Cooper
Products Used			BARBK / 11	BARBK / 5	DUO-VIS / 2	DUO-VIS / 1	
			UL / 6		GLUTE / 2		
			GLUTE / 1		CoqA303 / 2		

REMARKS

10/11/2004:
11/11/2004:
12/11/2004:
13/11/2004:
14/11/2004:

DRILLING FLUIDS SUMMARY

Operator : Santos Ltd
Well Name : Callister-1
Contractor : Transocean

Field/Area : Vic/P51
Description : Exploration
Location : Otway Basin, Vict.

Date		15/11/2004	16/11/2004				
Depth/TVD	m	/	/				
Activity		P & A	Pulling Anchors				
Mud Type		PHPA/KCl	PHPA/KCl				
Hole Size	in	8.5	8.5				
Circ Volume	bbl						
Flow Rate	gal/min	0	0				
Circ Pressure	psi	0	0				
Avg ROP	m/hr	0	0				
Sample From							
Flow Line Temp	°F						
Mud Weight	sp.gr.	@ °F	@ °F				
Funnel Viscosity	s/qt						
PV	cP						
YP	lb/100ft²						
R600/R300/R200		/ /	/ /				
R100/R6/R3		/ /	/ /				
10s/10m/30m Gel	lb/100ft²	//	//				
API Fluid Loss	cc/30 min						
HTHP Fluid Loss	cc/30 min						
Cake API/HT	1/32"	/	/				
Solids	%Vol						
Oil/Water	%Vol	/	/				
Sand	%Vol						
MBT	lb/bbl						
pH							
Alkal Mud (Pm)							
Pf/Mf		/	/				
Chlorides	mg/l						
Hardness Ca							
KCl	% WT						
PHPA	lb/bbl						
Sulphite	ppm						
Glycol	%						
Daily Mud Cost	$	0.00	0.00				
Cuml Mud Cost	$	274872.75	274872.75				
Sales Engineer		Nick Co/Paul Ma	Nick Co/Paul Ma				
Products Used							

REMARKS

15/11/2004:
16/11/2004:

DRILLING FLUIDS RECAP FOR SANTOS LIMITED
CALLISTER 1

PRODUCT CONSUMPTION

Product Consumption

Operator : Santos Ltd
Well Name : Callister-1
Location : Otway Basin, Vict.
Field/Area: Vic/P51

Contractor: Transocean
M-I Engineer: Paul Marshall/Alan Sim
Rig Name: Jack Bates
Stock Point: Portland, Vic.

	DATES											
Product	Product	Oct 12, 2004		Oct 13, 2004		Oct 14, 2004		Oct 15, 2004		Oct 16, 2004		Page
Name	Price	Qty	Cost	Qty	Cost	Qty	Cost	Qty	Cost	Qty	Cost	Totals
M-I BAR BULK	210.00		0.00		0.00		0.00		0.00	5	1050.00	1050.00
M-I GEL	228.67	9	2058.03	29	6631.43	24	5488.08	14	3201.38		0.00	17378.92
CAUSTIC SODA	20.46		0.00	1	20.46		0.00		0.00		0.00	20.46
SODA ASH	13.04	6	78.24	4	52.16	4	52.16	2	26.08		0.00	208.64
LIME	10.06		0.00		0.00		0.00	6	60.36		0.00	60.36
KCl 99% (BIG BAG)	430.06		0.00		0.00		0.00		0.00	1	430.06	430.06
GUAR GUM	60.00		0.00		0.00		0.00		0.00		0.00	0.00
POTASSIUM HYDROXIDE	31.28		0.00		0.00		0.00		0.00		0.00	0.00
PIPE-LAX W	354.95		0.00		0.00		0.00		0.00		0.00	0.00
CALCIUM CHLORIDE	11.54		0.00	42	484.68		0.00		0.00		0.00	484.68
DEFOAM A (NAPCO)	68.59		0.00		0.00		0.00		0.00		0.00	0.00
MIX II FINE	25.68		0.00		0.00		0.00		0.00		0.00	0.00
MIX II MEDIUM	26.72		0.00		0.00		0.00		0.00		0.00	0.00
KWICK SEAL F/M/C	28.00		0.00		0.00		0.00		0.00		0.00	0.00
DUO-VIS	227.00		0.00		0.00		0.00		0.00		0.00	0.00
POLYPAC UL	90.00		0.00		0.00		0.00		0.00		0.00	0.00
OS-1	33.54		0.00		0.00		0.00		0.00		0.00	0.00
CITRIC ACID	36.79		0.00		0.00		0.00		0.00		0.00	0.00
PHPA POLYPLUS	85.80		0.00		0.00		0.00		0.00		0.00	0.00
SODIUM BICARBONATE	10.64		0.00		0.00		0.00		0.00		0.00	0.00
GLUTE 25	93.68		0.00		0.00		0.00		0.00		0.00	0.00
OMYACARB 40	0.00		0.00		0.00		0.00		0.00		0.00	0.00
GLYDRIL MC	371.49		0.00		0.00		0.00		0.00		0.00	0.00
Conqor A303	380.36		0.00		0.00		0.00		0.00		0.00	0.00
Cumulative Engineering			0.00		0.00		0.00		0.00		0.00	0.00
Daily Product			2136.27		7188.73		5540.24		3287.82		1480.06	19633.12
Daily Sales Tax			0		0		0		0		0	0.00
Cumulative Product			2136.27		9325.00		14865.24		18153.06		19633.12	19633.12
Cumulative Cost			2136.27		9325.00		14865.24		18153.06		19633.12	19633.12

Product Consumption

Operator : Santos Ltd
Well Name : Callister-1
Location : Otway Basin, Vict.
Field/Area: Vic/P51

Contractor: Transocean
M-I Engineer: Paul Marshall/Alan Sim
Rig Name: Jack Bates
Stock Point: Portland, Vic.

	DATES											
Product	Previous	Oct 17, 2004		Oct 18, 2004		Oct 19, 2004		Oct 20, 2004		Oct 21, 2004		Page
Name	Page	Qty	Cost	Qty	Cost	Qty	Cost	Qty	Cost	Qty	Cost	Totals
M-I BAR BULK	1050.00		0.00		0.00		0.00		0.00		0.00	1050.00
M-I GEL	17378.9		0.00		0.00		0.00		0.00		0.00	17378.92
CAUSTIC SODA	20.46		0.00		0.00		0.00		0.00		0.00	20.46
SODA ASH	208.64		0.00	9	117.36		0.00		0.00	5	65.20	391.20
LIME	60.36		0.00		0.00		0.00		0.00		0.00	60.36
KCl 99% (BIG BAG)	430.06		0.00		0.00	35	15052.10		0.00	20	8601.20	24083.36
GUAR GUM	0.00		0.00		0.00		0.00		0.00		0.00	0.00
POTASSIUM HYDROXIDE	0.00		0.00		0.00		0.00		0.00		0.00	0.00
PIPE-LAX W	0.00		0.00		0.00		0.00		0.00		0.00	0.00
CALCIUM CHLORIDE	484.68		0.00		0.00		0.00		0.00		0.00	484.68
DEFOAM A (NAPCO)	0.00		0.00		0.00		0.00		0.00	1	68.59	68.59
MIX II FINE	0.00		0.00		0.00		0.00		0.00		0.00	0.00
MIX II MEDIUM	0.00		0.00		0.00		0.00		0.00		0.00	0.00
KWICK SEAL F/M/C	0.00		0.00		0.00		0.00		0.00		0.00	0.00
DUO-VIS	0.00		0.00	50	11350.0		0.00		0.00	43	9761.00	21111.00
POLYPAC UL	0.00		0.00	50	4500.00		0.00	6	540.00	42	3780.00	8820.00
OS-1	0.00		0.00		0.00		0.00		0.00		0.00	0.00
CITRIC ACID	0.00		0.00		0.00		0.00	18	662.22		0.00	662.22
PHPA POLYPLUS	0.00		0.00		0.00	30	2574.00		0.00	36	3088.80	5662.80
SODIUM BICARBONATE	0.00		0.00		0.00		0.00	6	63.84	16	170.24	234.08
GLUTE 25	0.00		0.00		0.00		0.00		0.00		0.00	0.00
OMYACARB 40	0.00		0.00		0.00		0.00		0.00		0.00	0.00
GLYDRIL MC	0.00		0.00		0.00		0.00		0.00		0.00	0.00
Conqor A303	0.00		0.00		0.00		0.00		0.00		0.00	0.00
Cumulative Engineering			0.00		0.00		0.00		0.00		0.00	0.00
Daily Product			0.00		15967.36		17626.10		1266.06		25535.03	80027.67
Daily Sales Tax			0		0		0		0		0	0.00
Cumulative Product			19633.12		35600.48		53226.58		54492.64		80027.67	80027.67
Cumulative Cost			19633.12		35600.48		53226.58		54492.64		80027.67	80027.67

Product Consumption

Operator : Santos Ltd
Well Name : Callister-1
Location : Otway Basin, Vict.
Field/Area: Vic/P51

Contractor: Transocean
M-I Engineer: Paul Marshall/Alan Sim
Rig Name: Jack Bates
Stock Point: Portland, Vic.

	DATES											
Product	Previous	Oct 22, 2004		Oct 23, 2004		Oct 24, 2004		Oct 25, 2004		Oct 26, 2004		Page
Name	Page	Qty	Cost	Qty	Cost	Qty	Cost	Qty	Cost	Qty	Cost	Totals
M-I BAR BULK	1050.00	4	840.00		0.00		0.00		0.00		0.00	1890.00
M-I GEL	17378.9		0.00		0.00		0.00		0.00		0.00	17378.92
CAUSTIC SODA	20.46		0.00		0.00	1	20.46		0.00		0.00	40.92
SODA ASH	391.20	2	26.08	6	78.24	4	52.16	2	26.08		0.00	573.76
LIME	60.36		0.00		0.00		0.00		0.00		0.00	60.36
KCl 99% (BIG BAG)	24083.3	9	3870.54	14	6020.84	8	3440.48	10	4300.60		0.00	41715.82
GUAR GUM	0.00		0.00		0.00		0.00		0.00		0.00	0.00
POTASSIUM HYDROXIDE	0.00		0.00	15	469.20	7	218.96	4	125.12	10	312.80	1126.08
PIPE-LAX W	0.00		0.00		0.00		0.00		0.00		0.00	0.00
CALCIUM CHLORIDE	484.68		0.00		0.00		0.00		0.00		0.00	484.68
DEFOAM A (NAPCO)	68.59		0.00		0.00		0.00		0.00		0.00	68.59
MIX II FINE	0.00		0.00		0.00		0.00		0.00		0.00	0.00
MIX II MEDIUM	0.00		0.00		0.00		0.00		0.00		0.00	0.00
KWICK SEAL F/M/C	0.00		0.00		0.00		0.00		0.00		0.00	0.00
DUO-VIS	21111.0	10	2270.00	15	3405.00	10	2270.00	20	4540.00		0.00	33596.00
POLYPAC UL	8820.00	20	1800.00	60	5400.00	16	1440.00	20	1800.00		0.00	19260.00
OS-1	0.00	6	201.24	12	402.48	6	201.24	6	201.24	6	201.24	1207.44
CITRIC ACID	662.22		0.00		0.00		0.00		0.00		0.00	662.22
PHPA POLYPLUS	5662.80		0.00	20	1716.00	16	1372.80	8	686.40		0.00	9438.00
SODIUM BICARBONATE	234.08		0.00		0.00		0.00		0.00		0.00	234.08
GLUTE 25	0.00		0.00		0.00		0.00		0.00		0.00	0.00
OMYACARB 40	0.00		0.00		0.00		0.00		0.00		0.00	0.00
GLYDRIL MC	0.00		0.00		0.00		0.00		0.00		0.00	0.00
Conqor A303	0.00		0.00		0.00		0.00		0.00		0.00	0.00
Cumulative Engineering			0.00		0.00		0.00		0.00		0.00	0.00
Daily Product			9007.86		17491.76		9016.10		11679.44		514.04	127736.87
Daily Sales Tax			0		0		0		0		0	0.00
Cumulative Product			89035.53		106527.29		115543.39		127222.83		127736.87	127736.87
Cumulative Cost			89035.53		106527.29		115543.39		127222.83		127736.87	127736.87

Product Consumption

Operator : Santos Ltd
Well Name : Callister-1
Location : Otway Basin, Vict.
Field/Area: Vic/P51

Contractor: Transocean
M-I Engineer: Paul Marshall/Alan Sim
Rig Name: Jack Bates
Stock Point: Portland, Vic.

	DATES											
Product	Previous	Oct 27, 2004		Oct 28, 2004		Oct 29, 2004		Oct 30, 2004		Oct 31, 2004		Page
Name	Page	Qty	Cost	Qty	Cost	Qty	Cost	Qty	Cost	Qty	Cost	Totals
M-I BAR BULK	1890.00		0.00		0.00		0.00	7	1470.00	33	6930.00	10290.00
M-I GEL	17378.9		0.00		0.00		0.00		0.00		0.00	17378.92
CAUSTIC SODA	40.92		0.00		0.00		0.00		0.00		0.00	40.92
SODA ASH	573.76		0.00		0.00		0.00		0.00		0.00	573.76
LIME	60.36		0.00		0.00		0.00		0.00		0.00	60.36
KCl 99% (BIG BAG)	41715.8		0.00		0.00	10	4300.60		0.00	1	430.06	46446.48
GUAR GUM	0.00		0.00		0.00		0.00		0.00		0.00	0.00
POTASSIUM HYDROXIDE	1126.08		0.00		0.00	2	62.56		0.00		0.00	1188.64
PIPE-LAX W	0.00		0.00		0.00		0.00		0.00		0.00	0.00
CALCIUM CHLORIDE	484.68		0.00		0.00		0.00		0.00		0.00	484.68
DEFOAM A (NAPCO)	68.59		0.00		0.00		0.00	4	274.36		0.00	342.95
MIX II FINE	0.00		0.00		0.00		0.00		0.00		0.00	0.00
MIX II MEDIUM	0.00		0.00		0.00		0.00		0.00		0.00	0.00
KWICK SEAL F/M/C	0.00		0.00		0.00		0.00		0.00		0.00	0.00
DUO-VIS	33596.0		0.00		0.00	10	2270.00		0.00		0.00	35866.00
POLYPAC UL	19260.0		0.00		0.00	20	1800.00		0.00		0.00	21060.00
OS-1	1207.44		0.00		0.00		0.00		0.00	9	301.86	1509.30
CITRIC ACID	662.22		0.00		0.00	11	404.69	11	404.69		0.00	1471.60
PHPA POLYPLUS	9438.00		0.00		0.00	6	514.80		0.00		0.00	9952.80
SODIUM BICARBONATE	234.08		0.00		0.00	18	191.52		0.00		0.00	425.60
GLUTE 25	0.00		0.00		0.00		0.00		0.00		0.00	0.00
OMYACARB 40	0.00		0.00		0.00		0.00		0.00		0.00	0.00
GLYDRIL MC	0.00		0.00		0.00		0.00	69	25632.81	8	2971.92	28604.73
Conqor A303	0.00		0.00		0.00		0.00		0.00		0.00	0.00
Cumulative Engineering			0.00		0.00		0.00		0.00		0.00	0.00
Daily Product			0.00		0.00		9544.17		27781.86		10633.84	175696.74
Daily Sales Tax			0		0		0		0		0	0.00
Cumulative Product			127736.87		127736.87		137281.04		165062.90		175696.74	175696.74
Cumulative Cost			127736.87		127736.87		137281.04		165062.90		175696.74	175696.74

Product Consumption

Operator : Santos Ltd
Well Name : Callister-1
Location : Otway Basin, Vict.
Field/Area: Vic/P51

Contractor: Transocean
M-I Engineer: Paul Marshall/Alan Sim
Rig Name: Jack Bates
Stock Point: Portland, Vic.

	DATES											
Product	Previous	Nov 1, 2004		Nov 2, 2004		Nov 3, 2004		Nov 4, 2004		Nov 5, 2004		Page
Name	Page	Qty	Cost	Qty	Cost	Qty	Cost	Qty	Cost	Qty	Cost	Totals
M-I BAR BULK	10290.0	58	12180.00	39	8190.00	41	8610.00	105	22050.00	4	840.00	62160.00
M-I GEL	17378.9		0.00		0.00		0.00		0.00		0.00	17378.92
CAUSTIC SODA	40.92		0.00		0.00		0.00	10	204.60		0.00	245.52
SODA ASH	573.76		0.00		0.00		0.00		0.00		0.00	573.76
LIME	60.36		0.00		0.00		0.00		0.00		0.00	60.36
KCl 99% (BIG BAG)	46446.4		0.00	10	4300.60		0.00		0.00		0.00	50747.08
GUAR GUM	0.00		0.00		0.00		0.00		0.00		0.00	0.00
POTASSIUM HYDROXIDE	1188.64		0.00		0.00	10	312.80		0.00		0.00	1501.44
PIPE-LAX W	0.00		0.00		0.00		0.00		0.00		0.00	0.00
CALCIUM CHLORIDE	484.68		0.00		0.00		0.00		0.00		0.00	484.68
DEFOAM A (NAPCO)	342.95	13	891.67		0.00		0.00	4	274.36		0.00	1508.98
MIX II FINE	0.00		0.00		0.00		0.00		0.00		0.00	0.00
MIX II MEDIUM	0.00		0.00		0.00		0.00		0.00		0.00	0.00
KWICK SEAL F/M/C	0.00		0.00		0.00		0.00		0.00		0.00	0.00
DUO-VIS	35866.0	10	2270.00		0.00		0.00		0.00		0.00	38136.00
POLYPAC UL	21060.0	1	90.00		0.00		0.00	28	2520.00		0.00	23670.00
OS-1	1509.30	5	167.70		0.00		0.00	6	201.24		0.00	1878.24
CITRIC ACID	1471.60		0.00		0.00		0.00		0.00		0.00	1471.60
PHPA POLYPLUS	9952.80	8	686.40		0.00		0.00	5	429.00		0.00	11068.20
SODIUM BICARBONATE	425.60	6	63.84		0.00		0.00		0.00		0.00	489.44
GLUTE 25	0.00		0.00	4	374.72		0.00	6	562.08		0.00	936.80
OMYACARB 40	0.00		0.00		0.00		0.00		0.00		0.00	0.00
GLYDRIL MC	28604.7	14	5200.86	3	1114.47	8	2971.92	6	2228.94		0.00	40120.92
Conqor A303	0.00		0.00		0.00		0.00		0.00		0.00	0.00
Cumulative Engineering			0.00		0.00		0.00		0.00		0.00	0.00
Daily Product			21550.47		13979.79		11894.72		28470.22		840.00	252431.94
Daily Sales Tax			0		0		0		0		0	0.00
Cumulative Product			197247.21		211227.00		223121.72		251591.94		252431.94	252431.94
Cumulative Cost			197247.21		211227.00		223121.72		251591.94		252431.94	252431.94

Product Consumption

Operator : Santos Ltd
Well Name : Callister-1
Location : Otway Basin, Vict.
Field/Area: Vic/P51

Contractor: Transocean
M-I Engineer: Paul Marshall/Alan Sim
Rig Name: Jack Bates
Stock Point: Portland, Vic.

	DATES											
Product	Previous	Nov 6, 2004		Nov 7, 2004		Nov 8, 2004		Nov 9, 2004		Nov 10, 2004		Page
Name	Page	Qty	Cost	Qty	Cost	Qty	Cost	Qty	Cost	Qty	Cost	Totals
M-I BAR BULK	62160.0	9	1890.00		0.00		0.00	55	11550.00	11	2310.00	77910.00
M-I GEL	17378.9		0.00		0.00		0.00		0.00		0.00	17378.92
CAUSTIC SODA	245.52		0.00		0.00		0.00		0.00		0.00	245.52
SODA ASH	573.76		0.00		0.00		0.00		0.00		0.00	573.76
LIME	60.36		0.00		0.00		0.00		0.00		0.00	60.36
KCl 99% (BIG BAG)	50747.0		0.00		0.00	3	1290.18		0.00		0.00	52037.26
GUAR GUM	0.00		0.00		0.00		0.00		0.00		0.00	0.00
POTASSIUM HYDROXIDE	1501.44		0.00		0.00		0.00		0.00		0.00	1501.44
PIPE-LAX W	0.00		0.00		0.00		0.00		0.00		0.00	0.00
CALCIUM CHLORIDE	484.68		0.00		0.00		0.00		0.00		0.00	484.68
DEFOAM A (NAPCO)	1508.98	1	68.59		0.00		0.00		0.00		0.00	1577.57
MIX II FINE	0.00		0.00		0.00		0.00		0.00		0.00	0.00
MIX II MEDIUM	0.00		0.00		0.00		0.00		0.00		0.00	0.00
KWICK SEAL F/M/C	0.00		0.00		0.00		0.00		0.00		0.00	0.00
DUO-VIS	38136.0		0.00		0.00	4	908.00		0.00		0.00	39044.00
POLYPAC UL	23670.0		0.00		0.00	5	450.00		0.00	6	540.00	24660.00
OS-1	1878.24		0.00		0.00		0.00		0.00		0.00	1878.24
CITRIC ACID	1471.60		0.00		0.00		0.00		0.00		0.00	1471.60
PHPA POLYPLUS	11068.2		0.00		0.00	2	171.60		0.00		0.00	11239.80
SODIUM BICARBONATE	489.44		0.00		0.00	2	21.28		0.00		0.00	510.72
GLUTE 25	936.80		0.00		0.00	5	468.40		0.00	1	93.68	1498.88
OMYACARB 40	0.00		0.00		0.00		0.00		0.00		0.00	0.00
GLYDRIL MC	40120.9		0.00		0.00		0.00		0.00		0.00	40120.92
Conqor A303	0.00		0.00		0.00		0.00		0.00		0.00	0.00
Cumulative Engineering			0.00		0.00		0.00		0.00		0.00	0.00
Daily Product			1958.59		0.00		3309.46		11550.00		2943.68	272193.67
Daily Sales Tax			0		0		0		0		0	0.00
Cumulative Product			254390.53		254390.53		257699.99		269249.99		272193.67	272193.67
Cumulative Cost			254390.53		254390.53		257699.99		269249.99		272193.67	272193.67

Product Consumption

Operator : Santos Ltd
Well Name : Callister-1
Location : Otway Basin, Vict.
Field/Area: Vic/P51

Contractor: Transocean
M-I Engineer: Paul Marshall/Alan Sim
Rig Name: Jack Bates
Stock Point: Portland, Vic.

	DATES											
Product	Previous	Nov 11, 2004		Nov 12, 2004		Nov 13, 2004		Nov 14, 2004		Nov 15, 2004		Page
Name	Page	Qty	Cost	Qty	Cost	Qty	Cost	Qty	Cost	Qty	Cost	Totals
M-I BAR BULK	77910.0	5	1050.00		0.00		0.00		0.00		0.00	78960.00
M-I GEL	17378.9		0.00		0.00		0.00		0.00		0.00	17378.92
CAUSTIC SODA	245.52		0.00		0.00		0.00		0.00		0.00	245.52
SODA ASH	573.76		0.00		0.00		0.00		0.00		0.00	573.76
LIME	60.36		0.00		0.00		0.00		0.00		0.00	60.36
KCl 99% (BIG BAG)	52037.2		0.00		0.00		0.00		0.00		0.00	52037.26
GUAR GUM	0.00		0.00		0.00		0.00		0.00		0.00	0.00
POTASSIUM HYDROXIDE	1501.44		0.00		0.00		0.00		0.00		0.00	1501.44
PIPE-LAX W	0.00		0.00		0.00		0.00		0.00		0.00	0.00
CALCIUM CHLORIDE	484.68		0.00		0.00		0.00		0.00		0.00	484.68
DEFOAM A (NAPCO)	1577.57		0.00		0.00		0.00		0.00		0.00	1577.57
MIX II FINE	0.00		0.00		0.00		0.00		0.00		0.00	0.00
MIX II MEDIUM	0.00		0.00		0.00		0.00		0.00		0.00	0.00
KWICK SEAL F/M/C	0.00		0.00		0.00		0.00		0.00		0.00	0.00
DUO-VIS	39044.0		0.00	2	454.00	1	227.00		0.00		0.00	39725.00
POLYPAC UL	24660.0		0.00		0.00		0.00		0.00		0.00	24660.00
OS-1	1878.24		0.00		0.00		0.00		0.00		0.00	1878.24
CITRIC ACID	1471.60		0.00		0.00		0.00		0.00		0.00	1471.60
PHPA POLYPLUS	11239.8		0.00		0.00		0.00		0.00		0.00	11239.80
SODIUM BICARBONATE	510.72		0.00		0.00		0.00		0.00		0.00	510.72
GLUTE 25	1498.88		0.00	2	187.36		0.00		0.00		0.00	1686.24
OMYACARB 40	0.00		0.00		0.00		0.00		0.00		0.00	0.00
GLYDRIL MC	40120.9		0.00		0.00		0.00		0.00		0.00	40120.92
Conqor A303	0.00		0.00	2	760.72		0.00		0.00		0.00	760.72
Cumulative Engineering			0.00		0.00		0.00		0.00		0.00	0.00
Daily Product			1050.00		1402.08		227.00		0.00		0.00	274872.75
Daily Sales Tax			0		0		0		0		0	0.00
Cumulative Product			273243.67		274645.75		274872.75		274872.75		274872.75	274872.75
Cumulative Cost			273243.67		274645.75		274872.75		274872.75		274872.75	274872.75

Product Consumption

Operator : Santos Ltd
Well Name : Callister-1
Location : Otway Basin, Vict.
Field/Area: Vic/P51

Contractor: Transocean
M-I Engineer: Paul Marshall/Alan Sim
Rig Name: Jack Bates
Stock Point: Portland, Vic.

	DATES											
Product	Previous	Nov 16, 2004										Page
Name	Page	Qty	Cost	Qty	Cost	Qty	Cost	Qty	Cost	Qty	Cost	Totals
M-I BAR BULK	78960.0		0.00									78960.00
M-I GEL	17378.9		0.00									17378.92
CAUSTIC SODA	245.52		0.00									245.52
SODA ASH	573.76		0.00									573.76
LIME	60.36		0.00									60.36
KCl 99% (BIG BAG)	52037.2		0.00									52037.26
GUAR GUM	0.00		0.00									0.00
POTASSIUM HYDROXIDE	1501.44		0.00									1501.44
PIPE-LAX W	0.00		0.00									0.00
CALCIUM CHLORIDE	484.68		0.00									484.68
DEFOAM A (NAPCO)	1577.57		0.00									1577.57
MIX II FINE	0.00		0.00									0.00
MIX II MEDIUM	0.00		0.00									0.00
KWICK SEAL F/M/C	0.00		0.00									0.00
DUO-VIS	39725.0		0.00									39725.00
POLYPAC UL	24660.0		0.00									24660.00
OS-1	1878.24		0.00									1878.24
CITRIC ACID	1471.60		0.00									1471.60
PHPA POLYPLUS	11239.8		0.00									11239.80
SODIUM BICARBONATE	510.72		0.00									510.72
GLUTE 25	1686.24		0.00									1686.24
OMYACARB 40	0.00		0.00									0.00
GLYDRIL MC	40120.9		0.00									40120.92
Conqor A303	760.72		0.00									760.72
Cumulative Engineering			0.00									0.00
Daily Product			0.00									274872.75
Daily Sales Tax			0									0.00
Cumulative Product			274872.75									274872.75
Cumulative Cost			274872.75									274872.75

SECTION 11: CASING & CEMENTING SUMMARY

Santos

CASING AND CEMENTING REPORT

FORM
DMS F220

Well Name: CALLISTER 01

Casing Type:	Surface Casing	Originated By:	P.King	Checked By:	B.Houston	Date:	17 Oct 2004
Hole Size:	17.50in	Total Depth:	787.5m	GL-RT:		Contractor:	Halliburton

PRE-FLUSH	25.0bbl @ 8.50ppg	SPACER	20.0bbl @ 8.50ppg
Additives:	Seawater	Additives:	Seawater + 0.05 kg/bbl Fluorescene Dye

CEMENT		ADDITIVES	%	Amount	Units
LEAD SLURRY:	1034sx				
Brand / Class:	ABC / G	Econolite Liquid		800	Gal
Slurry Yield:	2.23ft³/sx	NF-6		4	Gal
Mixwater Req't:	12.36gal/sx				
Actual Slurry Pumped:	411.0bbl				
Density:	12.50ppg				
Cement Top (MD):	0m				
TAIL SLURRY:	357sx				
Brand / Class:	ABC / G	NF-6		1	Gal
Slurry Yield:	1.19ft³/sx				
Mixwater Req't:	5.32gal/sx				
Actual Slurry Pumped:	75.0bbl				
Density:	15.80ppg				
Cement Top (MD):	0m				

DISPLACEMENT		Fluid: Seawater @ 8.50ppg	
Theoretical Displ.:	289.0bbl	Bumped Plug with:	0psi
Actual Displ.:	295.0bbl @ 6gpm	Pressure Tested To:	0psi
Displaced via:		Bleed Back:	0bbl

ACTIVITY	Time/Date
Start Running csg.	
Casing On Bottom	
Start Circulation	15:17
Start Pressure Test	15:24
Pump Preflush	15:42
Start Mixing	15:48
Finish Mixing	17:02
Start Displacing	17:47
Stop Displ./Bump	17:52
Pressure Test	

Returns to Surface: 0bbl mud, 0bbl cmt

Casing Action During Preflush : Cement : Displacement :

Top Up Job run: No 0sx of class

Wiper Plug Top: Yes

Wiper Plug Bottom: Yes

Plug Set: Manufacturer: Weatherford Type: SSR

Centralizer Type: Bow Spring Centralizer Placement Depth: 774, 770, 762, 757, 747, 735, 698, 660, 622, 584, 545

CASING AND EQUIPMENT DETAILS								
Stick Up							0m	
No. Joints	OD	Wt	Grade	Comment	Thread	Length	From	To
17	5.00in	49.3lbs/ft		5" HWDP Running String	4.5 IF	154.95m	0m	154.95m
1	0in	0lbs/ft		WH Running Tool		0.45m	154.95m	155.4m
1	18.75in	0lbs/ft		18-3/4" Wellhead Housing		11.70m	155.4m	167.1m
1	13.38in	72lbs/ft	L80	X-0ver w/ No Cross Cplg	BTCxTER	12.43m	167.1m	179.53m
43	13.38in	68lbs/ft	L80		TER	549.61m	179.53m	729.14m
1	13.38in	68lbs/ft	L80	X-over	TERxBTC	12.26m	729.14m	741.4m
1	13.38in	68lbs/ft	L80	Float Collar Joint	BTC	12.22m	741.4m	753.62m
1	13.38in	68lbs/ft	L80	Shoe Track Joint	BTC	12.05m	753.62m	765.67m
1	13.38in	68lbs/ft	L80	Float Shoe	BTC	12.58m	765.67m	778.25m

Theoretical Bouyed wt. of casing:	118.0klb	Bradenhead Height above GL:	0m
Casing wt. prior to landing csg:	0klb	Bradenhead Description / Length:	/ 0m
Actual wt. of casing (last joint run-block wt):	0klb	Tubing Spool Size:	
Landing wt. (after cementing and pressure bleed off):	0klb	Setting Slips:	0klb

Cementing Job Remarks: Plug did not bump. Pumped 1/2 shoe track volume over theoretical displacement.
Motor tripped during job. Re-start OK. ROV monitored good returns to seabed.

Santos

CASING AND CEMENTING REPORT

FORM
DMS F220

Well Name: CALLISTER 01

Casing Type:	Intermediate Casing	Originated By:	J. Young	Checked By:		Date:	28 Oct 2004
Hole Size:	12.25in	Total Depth:	2550.0m	GL-RT:		Contractor:	Halliburton

PRE-FLUSH	0bbl @ 0ppg	SPACER	20.0bbl @ 8.34ppg
Additives:		Additives:	8.34ppg Drill water with no additives.

CEMENT		ADDITIVES	%	Amount	Units
LEAD SLURRY:	110sx				
Brand / Class:	ABC / G	Econolite Liquid		0.503	gal/sx
Slurry Yield:	2.13ft³/sx	HR-6L		0.237	gal/sx
Mixwater Req't:	11.68gal/sx	NF-6		0.007	gal/sx
Actual Slurry Pumped:	42.0bbl				
Density:	12.50ppg				
Cement Top (MD):	2837.0m				
TAIL SLURRY:	163sx				
Brand / Class:	ABC / G	Halad-413L		0.252	gal/sx
Slurry Yield:	1.18ft³/sx	HR-6L		0.075	gal/sx
Mixwater Req't:	4.95gal/sx	NF-6		0.003	gal/sx
Actual Slurry Pumped:	34.0bbl				
Density:	15.80ppg				
Cement Top (MD):	2687.0m				

DISPLACEMENT		Fluid: Drilling Mud @ 9.10ppg	
Theoretical Displ.:	668.0bbl	Bumped Plug with:	0psi
Actual Displ.:	570.0bbl @ 8gpm	Pressure Tested To:	0psi
Displaced via:	Hallibuton Pump	Bleed Back:	0.5bbl

ACTIVITY	Time/Date
Start Running csg.	
Casing On Bottom	
Start Circulation	15:04
Start Pressure Test	15:09
Pump Preflush	15:15
Start Mixing	15:25
Finish Mixing	15:55
Start Displacing	16:00
Stop Displ./Bump	17:20
Pressure Test	N/A

Returns to Surface: 626.0bbl mud, 0bbl cmt

Casing Action During Preflush : No Action Taken Cement : No Action Taken Displacement : No Action Taken

Top Up Job run: No 0sx of class

Wiper Plug Top: Yes

Wiper Plug Bottom: Yes

Plug Set: Manufacturer: Weatherford Type:

Centralizer Type: Weatherforf Bow Spring

Centralizer Placement Depth: Centralisers Run:
- Shoe
- Intermediate Shoe Joint
- Float Collar
- 25 centralisers placed every 3rd joint (1591m).

CASING AND EQUIPMENT DETAILS

Stick Up 0m

No. Joints	OD	Wt	Grade	Comment	Thread	Length	From	To
0	0in	0lbs/ft		Landing String with CHSART		156.42m	0m	156.42m
1	9.63in	47lbs/ft	L80	Casing hanger with 9-5/8" New Vam Extension	New Vam	2.94m	156.42m	159.36m
73	9.63in	47lbs/ft	L80	9-5/8" New Vam Casing	New Vam	877.13m	159.36m	1036.49m
1	9.63in	47lbs/ft	L80	9-5/8" New Vam Box x TMS Pin Crossover	New Vam/TMS	12.79m	1036.49m	1049.28m
116	9.63in	47lbs/ft	L80	9-5/8" TMS-SC Casing	TMS-SC	1436.14m	1049.28m	2485.42m
1	9.63in	47lbs/ft	L80	9-5/8" TMS Box x New Vam Pin Crossover	TMS//New Vam	12.76m	2485.42m	2498.18m
1	9.63in	47lbs/ft	L80	9-5/8" Float Collar	New Vam	13.62m	2498.18m	2511.8m
1	9.63in	47lbs/ft	L80	9-5/8" Intermediate shoe joint	New Vam	12.91m	2511.8m	2524.71m
1	9.63in	47lbs/ft	L80	9-5/8" Shoe Joint	New Vam	13.32m	2524.71m	2538.03m

Theoretical Bouyed wt. of casing:	120.0klb	Bradenhead Height above GL:	0m
Casing wt. prior to landing csg:	0klb	Bradenhead Description / Length:	/ 0m
Actual wt. of casing (last joint run-block wt):	0klb	Tubing Spool Size:	
Landing wt. (after cementing and pressure bleed off):	0klb	Setting Slips:	0klb

Cementing Job Remarks: 5 Damaged Joints of Tenaris AER joints were laid out.

SECTION 12: MUDLOGGING WELL REPORT

(Including Mudlog 1:500 & D-Exponent Log)

END OF WELL REPORT

Santos Ltd

CALLISTER-1

13th October– 4th November 2004

by

BAKER HUGHES INTEQ

Callister-1

Final Well Report

SECTION 1

WELL SUMMARY

1 Well Data

Well Name	Callister-1	
Rig Name:	MODU Jack Bates	
Rig Type:	Semi-submersible	
Drilling Contractor:	Transocean Sedco Forex	
Drilling Datum:	Rotary Table	
Drill Floor Elevation:	29.0m above MSL	
Water Depth:	154.8 mRT	
Surface Co-ordinates:	38° 31’ 59.72” S 141° 28’ 23.29” E	Latitude Longitude
Block:	Vic/P51	
Well Type:	New Field Wildcat	
Spud Date:	13th October 2004	
Total Depth:	3914 m	
TD Date:	4th November 2004	
Primary Objective:	Intra-Paaratte/Nullawarre Sands	
Well Status:	Abandoned	

Baker Hughes INTEQ Crew:

Data Engineers:	Jimmy Concepcion Ashley Lengenberg	Ramon Ronquillo Duane Hatton
Mudloggers:	Toto Rukmobroto	Kim Krivan

1.1 Well Summary

Callister-1 was spudded on the 12th of October 2004. The objective of the well was to test the hydrocarbon potential of the intra-Paaratte Formation and a secondary target of the Waarre Formation.

A 914mm (36”) hole opening assembly with 660mm (26”) bit was used to spud the well, drilling from 158m to 192m. The section was drilled riserless. The 762mm (30”) casing was run and cemented with the shoe set at 192m.

After drilling through cement and the casing shoe, the 445mm (17½”) hole was drilled to the section TD at 787m in one bit run. No problems were encountered and the 340mm (13 3/8”) casing shoe was cemented at 778m. Like the 914mm hole, this section was drilled riserless, using seawater with regular PHG and Gel sweeps.

The 311mm (12¼”) hole section was drilled from 787m to 990m and 990m to 2550m in two bit runs with PDC bits on a rotary assembly. Prior to drilling ahead a Formation Integrity Test (FIT) was performed. The seawater contents of the annulus were displaced to a 1.06sg seawater gel prior to drilling ahead. The FIT yielded a value of 1.59sg EMW. New hole was then drilled to 990m, where due to drop in the ROP the bit was pulled out. A new bit was RIH and drilling of new formation continued to 2550m without any further difficulties. The bit was pulled out of hole and wireline logging commenced. Once wireline logging had been completed the (9 $^{5}/_{8}$”) Casing was run and set at 2538mRT.

The 216mm (8 ½”) hole section was drilled from 2550m to 2662m and 2662 to 3914m in two bit runs with PDC bits on a rotary assembly. A Leak Off Test was performed after drilling out cement, the 244mm (9-5/8”) shoe at 2538m and 3m of new formation to 2553m, the LOT resulted in an EMW of 1.76sg. New hole was then drilled to 2662m, where due to an erratic pump pressure bit was pulled out. The second bit was RIH and new formation was drilled to Callister-1’s TD at 3914m, which was reached at 09:00 on 4th November 2004. While drilling this section no major mud losses were observed, connection gases were recorded at every connection from 3478m to 3914m TD of Callister-1. This resulted in the mud weight be raised to 1.69sg before being able to pull out of hole.

A Wireline logging program (4 runs) followed after the well reached TD.

No testing took place. The well was abandoned and the rig moved off location on 17/11/04.

SECTION 2

DRILLING & ENGINEERING

2.1 Bit Run Summaries

914 mm (36") Hole Section
13th Oct 2004

Bit Run No. 1 Summary

Bit No.	NB1
Bit Size	660 mm (26")
Bit Type	Smith DSTC
Serial Number	6687369
IADC Code	1-1-1
Jets	2 x 22, 1 x 20
Depth In	158.4 mRT
Depth Out	192 mRT
Metres Drilled	33.6 m
Hours	2.2 hrs
Total Bit Revolutions	8.2 krevs
Rotating Hours	3.0 hrs
Average ROP	15.3 m/hr
Bit Grading	0-0-NO-A-X-I-NO-TD

Drilling Parameters

WOB	2 - 5 klbs
RPM	50 - 60
Torque	2.2 – 2.6 kftlbs
Pump Pressure	252 - 975 psi
Flow In	293 - 882 gpm

Mud

SW / PHG sweeps	1.03 sg

Lithology

Returns to seabed

Drilling Summary

NB1 was made up on a rotary BHA, with a 914mm (36”) hole opener and run in the hole, tagging the seabed at 154.8mRT. Callister-1 was spudded at 12:00 hrs on October 13, 2004. New hole was drilled to 192mRT, with seawater and hi-vis sweeps. At TD, the hole was displaced with 100 bbls of PH gel mud. A wiper trip to 165m was performed which included an Anderdrift survey and the bit was run back to bottom. The hole was displaced with 200 bbls of PHB mud and a Totco single shot survey was dropped and subsequently recovered after POOH to surface.

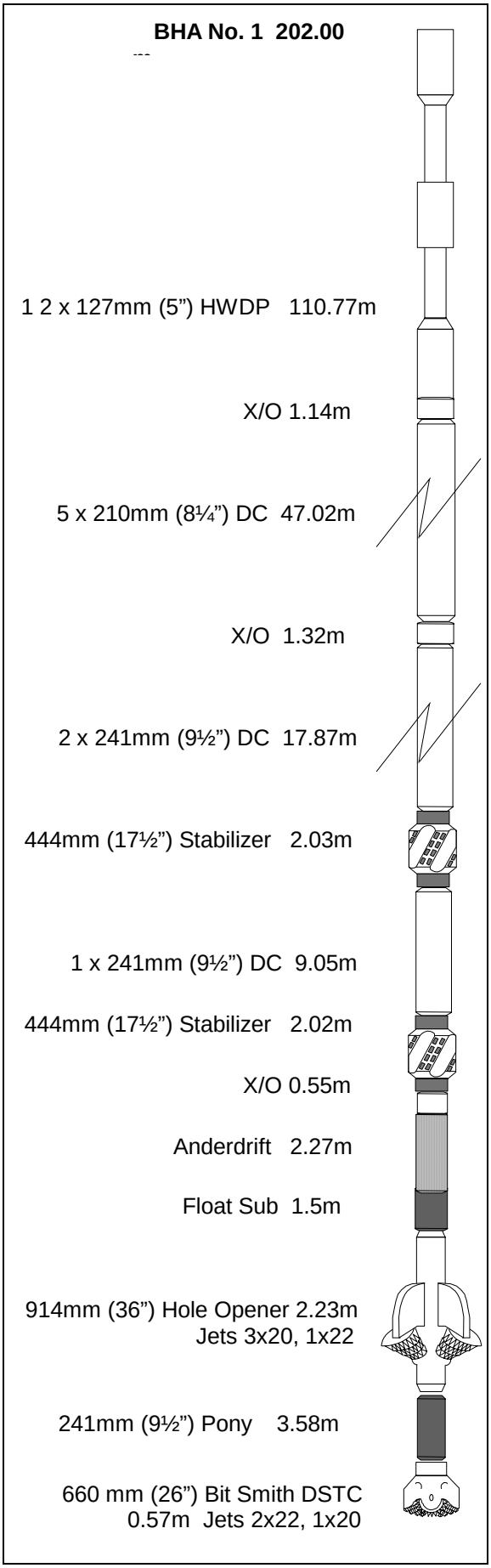

445 mm (17 1/2") Hole Section
15th – 16th Oct 2004

Bit Run No. 2 Summary

Bit No.	NB2
Bit Size	445 mm (17 ½")
Bit Type	Reed T11
Serial Number	A 98111
IADC Code	1-1-1
Jets	3 x 22, 1 x 20
Depth In	192mRT
Depth Out	787.5mRT
Metres Drilled	595.5m
Hours	24.3 hrs
Total Bit Revolutions	17.2 krevs
Rotating Hours	38.2 hrs
Average ROP	24.5 m/hr
Bit Grading	4-4-WT-A-4-I-NO-TD

Drilling Parameters

WOB	1 - 37 klbs
RPM	40 – 137
Torque	1.22 – 16.47 kftlb
Pump Pressure	1395 - 2741 psi
Flow In	775 – 1082 gpm

Mud

Seawater	1.02 sg

Lithology

Returns to seabed

Drilling Summary

NB2 was made up on a rotary BHA and RIH. The float and the shoe of the 762mm x 508mm (30" x 20") casing were drilled out and new hole was made from 192mRT to 787.5mRT. At TD and a 100bbl hi-vis gel sweep was pumped to clean the hole. The hole was displaced with PHG before 40bbl of KCl pill was spotted on bottom.The assembly was then pulled to 159mRT and the wellhead was flushed. Thereafter, the bit was pulled to surface to run the 13-3/8 casing.

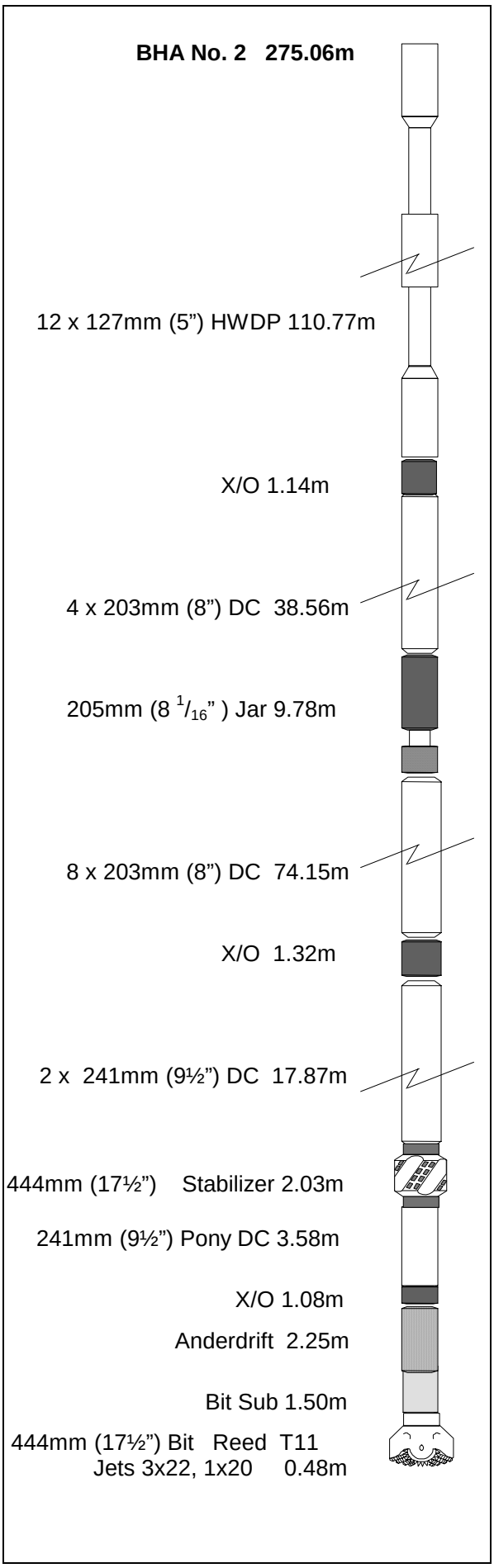

311 mm (12 1/4") Hole Section
19th – 21st October 2004

Bit Run No. 3 Summary

Bit No.	NB 3
Bit Size	311 mm (12 1/4”)
Bit Type	Reed DSX194
Serial Number	DSX194HGUW
IADC Code	S-1-2-3
Jets	9 x 11
Depth In	787.5 mRT
Depth Out	990.0 mRT
Metres Drilled	202.5 m
Hours	8.6
Total Bit Revolutions	90.52 krevs
Rotating Hours	19.4 hrs
Average ROP	23.5 m/hr
Bit Grading	8-8-RO-A-X-I-E-PR

Drilling Parameters

WOB	1.5 - 22 klbs
RPM	61 – 106
Torque	2.5 – 14.5 kftlb
Pump Pressure	1430 - 2760 psi
Flow In	747 – 1018 gpm

Mud

Seawater Gel	1.03 - 1.06 sg
Seawater	1.02 sg

Lithology

Sandstone, Calcarenite, Calcareous Claystone

Drilling Summary

NB3 was made up with a mud motor, MWD tool and RIH. The top of the cement was tagged at 770mRT and the shoetrack, plugs and floats were drilled to 778mRT. The rat hole was reamed to 787.5mRT while displacing the hole to 1.06 sg seawater/gel. New hole was drilled to 790.5mRT where the mud in hole was conditioned further. At 790.5mRT the bit was pulled inside the shoe and a FIT was performed. The FIT was conducted with a resulting EMW of 1.59 sg. New hole was then drilled to 990m, where due to drop in the ROP the bit was pulled out.

BHA No. 3 277.34m

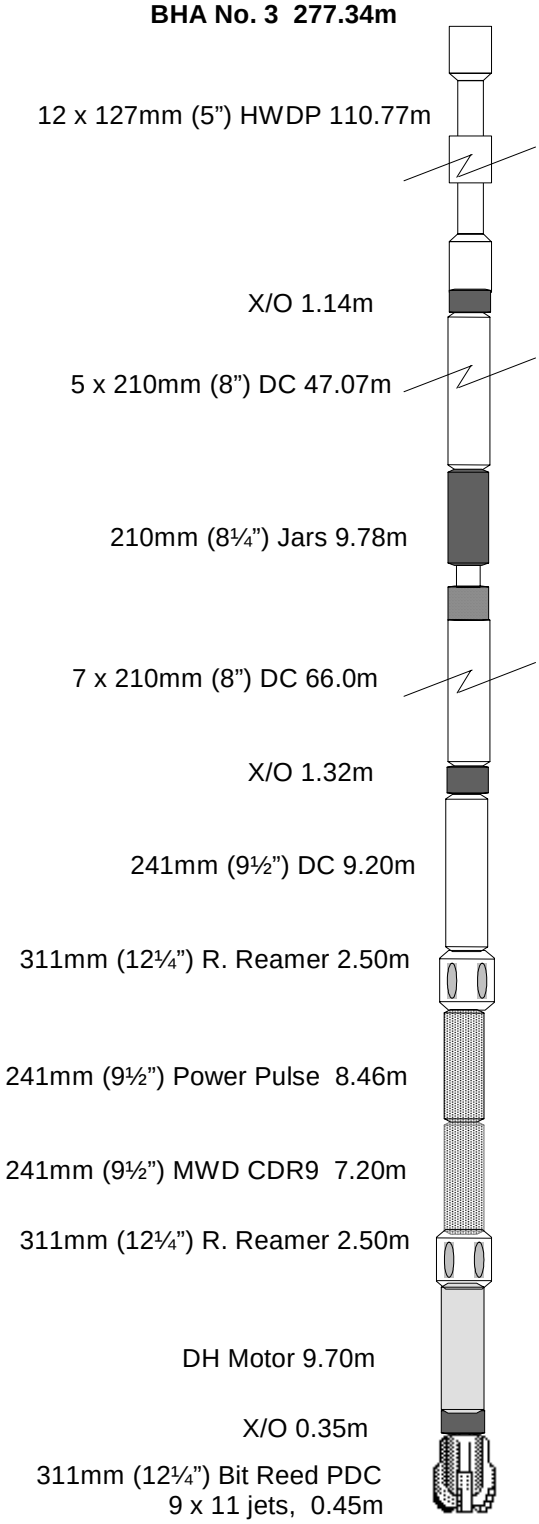

311 mm (12 1/4") Hole Section
21st – 26th October 2004

Bit Run No. 4 Summary

Bit No.	NB 4
Bit Size	311 mm (12 1/4")
Bit Type	Reed DSX194
Serial Number	DSX194HGUW
IADC Code	N/A
Jets	5 x 14
Depth In	990.0 mRT
Depth Out	2550.0 mRT
Metres Drilled	1560.0 m
Hours	57.6
Total Bit Revolutions	648.7 krevs
Circulating Hours	75.2 hrs
Average ROP	27.1 m/hr
Bit Grading	5-6-WT-A-IN-X-ER-TD

Drilling Parameters

WOB	0.8 – 18.5 klbs
Surface RPM	33 – 110
Torque	2.6 – 17.6 kftlb
Pump Pressure	1483 - 3111 psi
Flow In	747 – 1008 gpm

Mud

KCl/PHPA	1.06 – 1.09 sg

Lithology

Sandstone, Siltstone, Claystone

Drilling Summary

NB3 was made up with down-hole motor and MWD tool. Drilling then commenced from 990m to 1919m where a wiper trip to the shoe was made to repair the top drive. Thereafter, the bit was tripped in to bottom and continued drilling to 2550m. At 2550m, the hole was circulated clean and the bit was pulled to surface. Schlumberger then run the E-logs.

BHA No. 4 277.34

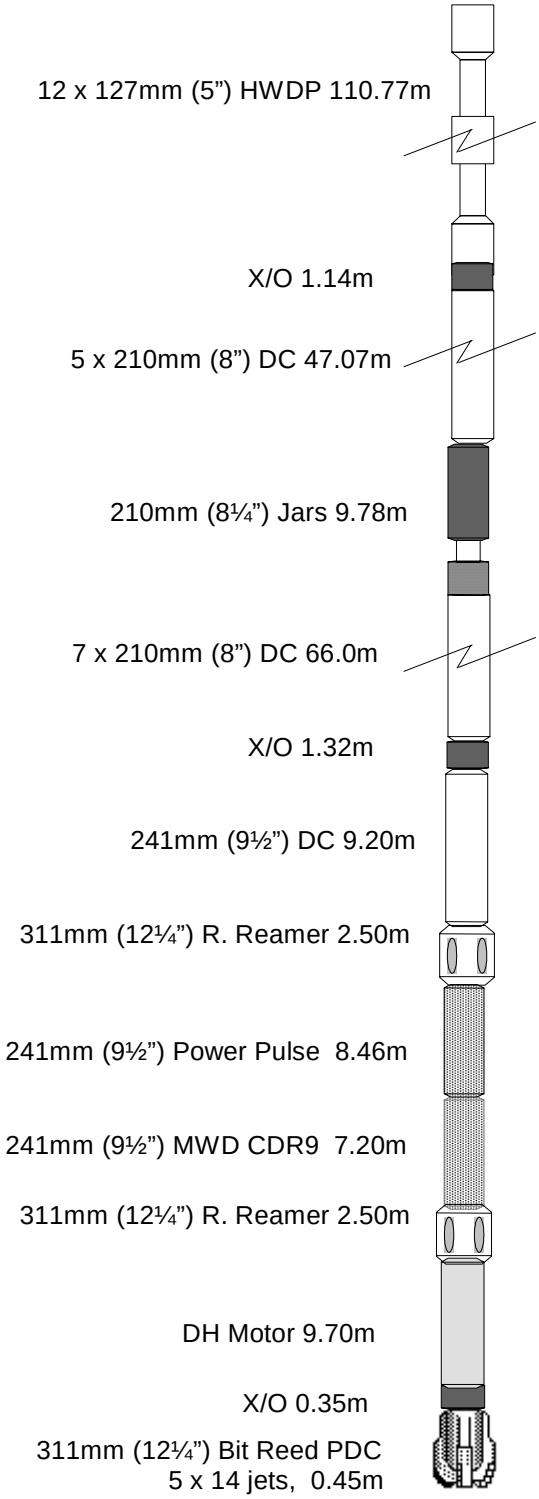

216mm (8 1/2") Hole Section
29th November – 30th November 2004

Bit Run No. 5 Summary

Bit No.	NB 5
Bit Size	216mm (8 ½")
Bit Type	Reed RSX272
Serial Number	109886
IADC Code	M 2-2-3
Jets	5 x 14, 2 x 10
Depth In	2550 m
Depth Out	2662 m
Metres Drilled	112 m
Hours	5.3
Total Bit Revolutions	39.89 krevs
Rotating Hours	16.1 hrs
Average ROP	21.13m/hr
Bit Grading	3-1-BU-A-X-1-I-CT:WT-PR

Drilling Parameters

WOB	2 – 22 klbs
RPM	103 - 136
Torque	4.61 – 13.19 kftlb
Pump Pressure	1938 – 3012 psi
Flow In	395 – 854 gpm

Mud

KCl/PHPA 1.09 - 1.12 sg

Lithology

Siltstone

Drilling Summary

NB5 was run in on a rotary assembly to drill the 216mm (8-1/2") hole section to 2436m where it was began to wash and reamed down. The top of cement was tagged at 2450m and the plugs, float collar and shoe track, which was set at 2538m, of the 244mm (9 5/8") casing were drilled. 3m of new formation was drilled from 2550m to 2553m, at which point the bit was withdrawn inside the shoe and a leak off test was performed once the hole was circulated clean. The test produced an EMW of 1.76sg. Drilling commenced with good returns, flow checks were performed when required and surveys taken every 5 stands. At 2662m, it was decided to pull the bit due to erratic drilling parameters. A bottoms up were circulated and a slug pumped prior to POOH.

BHA No. 5 295.80m

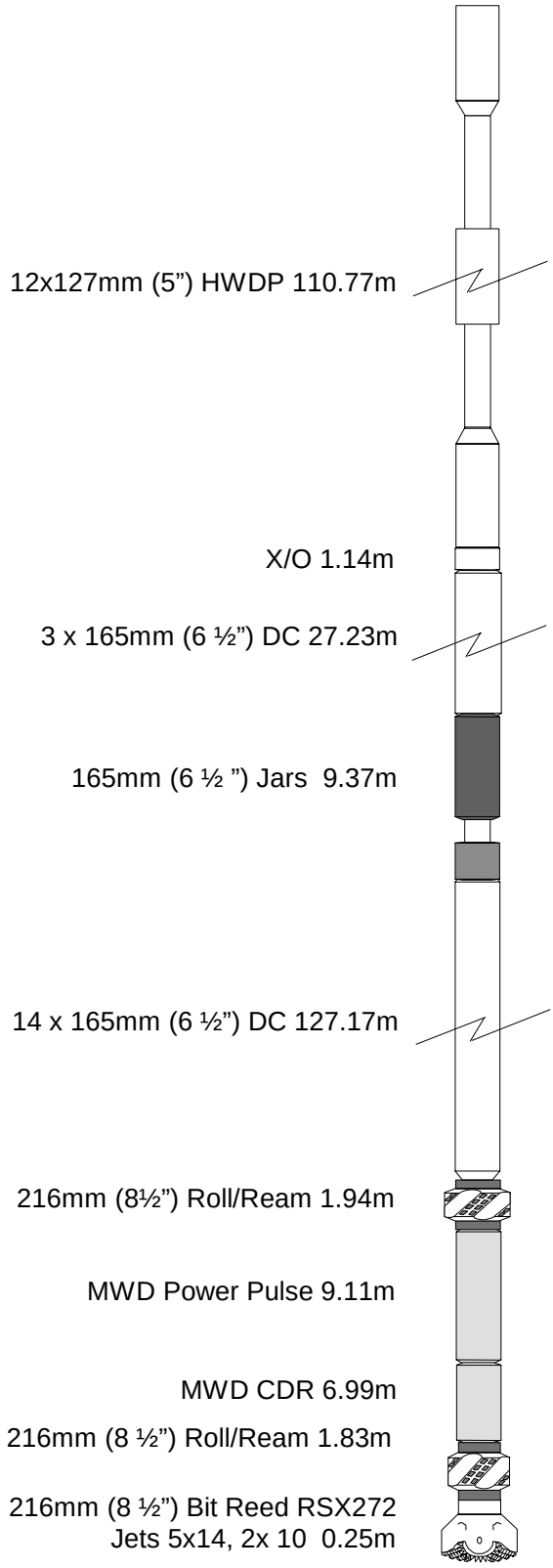

216mm (8 1/2") Hole Section
31th October – 4th November 2004

Bit Run No. 6 Summary

Bit No.	NB 6
Bit Size	216mm (8 ½")
Bit Type	Reed DSX104
Serial Number	409737
IADC Code	M 2-2-3
Jets	5 x 15
Depth In	2662 m
Depth Out	3914 m
Metres Drilled	1252 m
Hours	60.1
Total Bit Revolutions	458.2 krevs
Rotating Hours	16.1 hrs
Average ROP	20.83m/hr
Bit Grading	2-2-WT-A-X-IN-CT-TD

Drilling Parameters

WOB	0 – 28 klbs
RPM	51 - 137
Torque	3.8 – 20.1 kftlb
Pump Pressure	2364 – 4396 psi
Flow In	536 – 718 gpm

Mud

KCl/PHPA	1.16 - 1.67 sg

Lithology

Siltstone & Sandstone

Drilling Summary

NB6 was run in on a rotary assembly to drill the rest of the 216mm (8-1/2") hole section. Drill ahead with 1.16sg mud until 3003m. Weigh up to 1.31sg and continued to drill to 3150m where the mud was weighed up to 1.38sg, as per the drilling program. Drilling with this mud weight continued to 3528m where mud weight was raised again to 1.39sg due to a connection gas of 2750units. Drilling continued to 3631m where a bottoms up was circulated before the bit was pulled back to 3463m to pick up extra drill pipe to get to TD. The bit was RIH to 3630m and washed down to 3631m where drilling commenced, a trip gas of 5500 units was observed. The mud weight was raised to 1.44sg before drilling started again. At 3744m a bottoms up was circulated to weight up mud to 1.54sg. Drilling continued to 3914m where it was decided to call it TD on the 4th November 2004, with a mud weight of 1.56sg. A bottoms up was circulated and mud weight was further increased to 1.1.58sg due to 582units of gas being observed. A static flowcheck was performed prior to the stand being worked up and down 5 times. A bottom up was performed again to access the gas levels swabbed, 755 units were observed so mud weight was increased to 1.63sg. The bit was pulled to 3634m, where due to a 2.2bbl gain it was run back to bottom and the mud weight was raised to 1.67sg. The bit was then pulled to surface without any problems flowchecking at the shoe.

BHA No. 6 295.45m

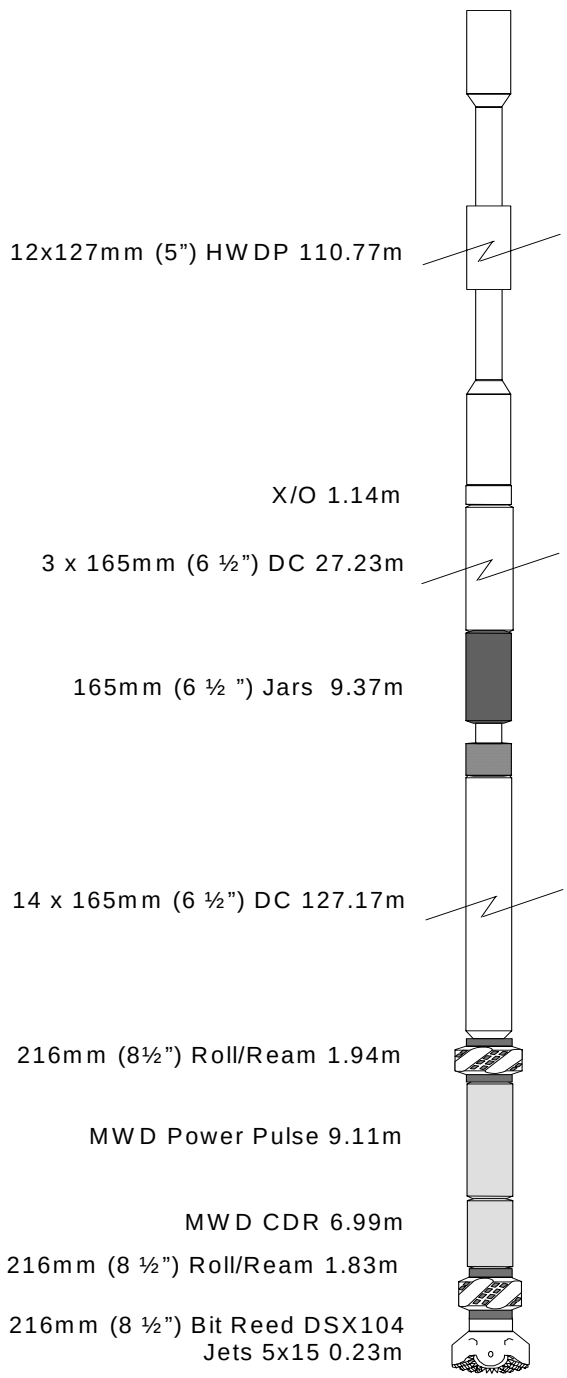

2.2 Casing / Cementing Summary

762mm (30") Conductor

13th October 2004

Hole Size	914 mm (36”)
Depth	192m
Casing	1x 20” shoe and pup 1x X/O 2x Intermediate Joint 1x 30” Conductor Housing Joint, Dril Quip Housing
ID	711mm (28")
Weight	361 lb/ft
Grade	DrillQuip
Shoe Depth	192m

Cement Details:

Sacks	1086
Type	“G”
Mixwater	8.89 gal/sx
Additives	2% BWOC
Weight	1.9 Sg
Yield	1.19 ft^3/sx
Volume	230 bbls

Summary

The casing was run with a 5” HWDP running string, landing the shoe at 192mRT. Prior to cementing circulation was established through the cement hose and a seawater spacer was pumped before a total of 230 bbls of cement slurry. The cement was displaced with 48 bbls seawater observing good returns. The running tool was then released and laid out.

762mm (30”) x 508mm (20”) Conductor

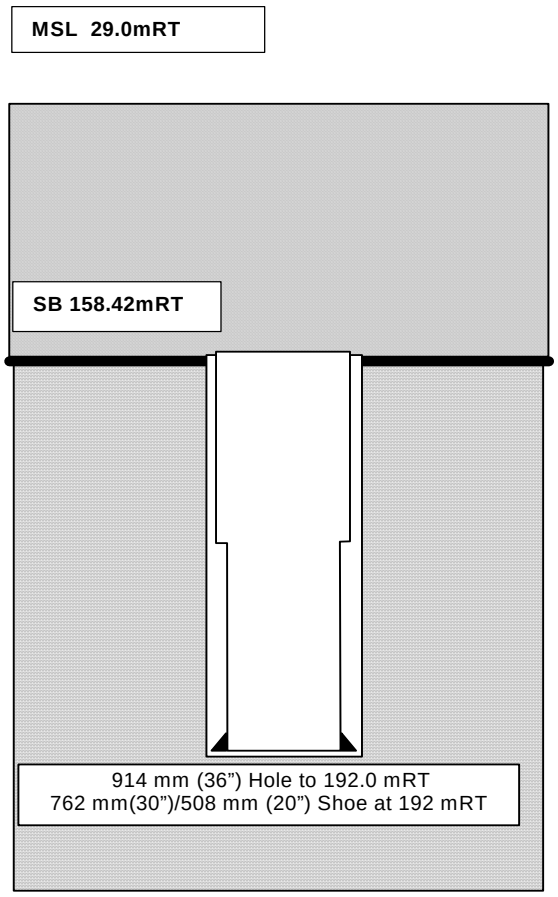

340mm (13 $^{3}/_{8}$") Casing

17th October 2004

Hole Size	445mm (17 ½")
Depth	787.5m
Casing	1x 340mm Shoe
	1x Intermediate Joint
	1x Float Collar
	1x Float Collar Joint
	48 x 340mm Casing Joints
	1x 476.25mm (18 ¾ ") WH Joint
ID	316mm
Weight	68 lb/ft
Grade	L80
Shoe Depth	778.3m

Cement Details:

Lead Slurry

Sacks	1034
Type	"G"
Mixwater	12.36 gal/sx
Additives	0.77 gal/sx Econolite
	0.004 gal/sx NF-6
Weight	1.5 sg
Yield	2.23 ft^3/sx
Volume	411 bbls

Tail Slurry

Sacks	357
Type	"G" Neat
Mixwater	5.32 gal/sx
Additives	0.003 gal/sx NF-6
Weight	1.5 sg
Yield	1.19 ft^3/sx
Volume	75 bbls

Summary

A total of 48 joints 13-3/8" casing were run with the shoe landing at 778.3mRT. Prior to cementing 1.5 times the casing volume was circulated. The cement lines were rigged up and tested to 5000 psi. After pumping the pre-flush (25bbls seawater) and 20bbls of dye spacer the lead and tail slurry followed. The cement was displaced with 295bbls of seawater, but the plug was not bumped. Good visual returns were observed to the seabed throughout the cement job with the ROV.

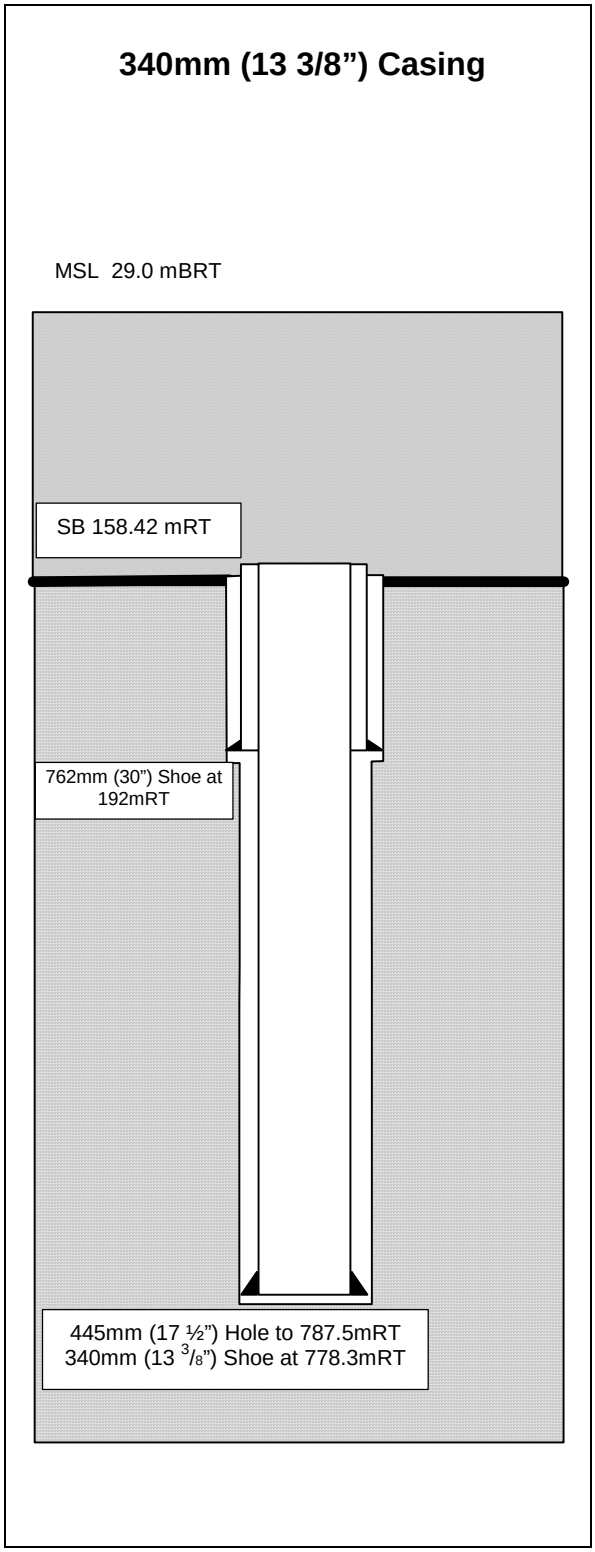

244mm (9 5/8") Casing

27th – 28th October 2004

Hole Size	311mm (12 ¼")
Depth	2550m
Casing	1x 244mm Shoe 1x Intermediate Joint 1x Float Collar Joint 189x 244mm Casing Joints 1x 244mm Hanger
ID	8.681"
Weight	70 kg/m
Grade	L-80
Shoe Depth	2538.4m

Cement Details:

Lead Slurry

Sacks	243
Type	"G"
Mixwater	13.026 gal/sx
Additives	0.01 gal/sx D-47 0.42 gal/sx D-75 0.09 gal/sx D-110
Weight	12.52 ppg
Yield	2.22 ft^3/sx
Volume	96.1 bbls

Tail Slurry

Sacks	229
Type	"G" Neat
Mixwater	5.069 gal/sx
Additives	0.003 gal/sx D-47 0.400 gal/sx D-300 0.06 gal/sx D145A
Weight	15.86 ppg
Yield	1.15 ft^3/sx
Volume	46.9 bbls

Summary

A total of 192 joints of 9-5/8" casing were run with the shoe landing at 2538mRT. The cement lines were rigged up and the cement lines were tested to 5000 psi. The cement job was performed and displaced with the cement pump only.

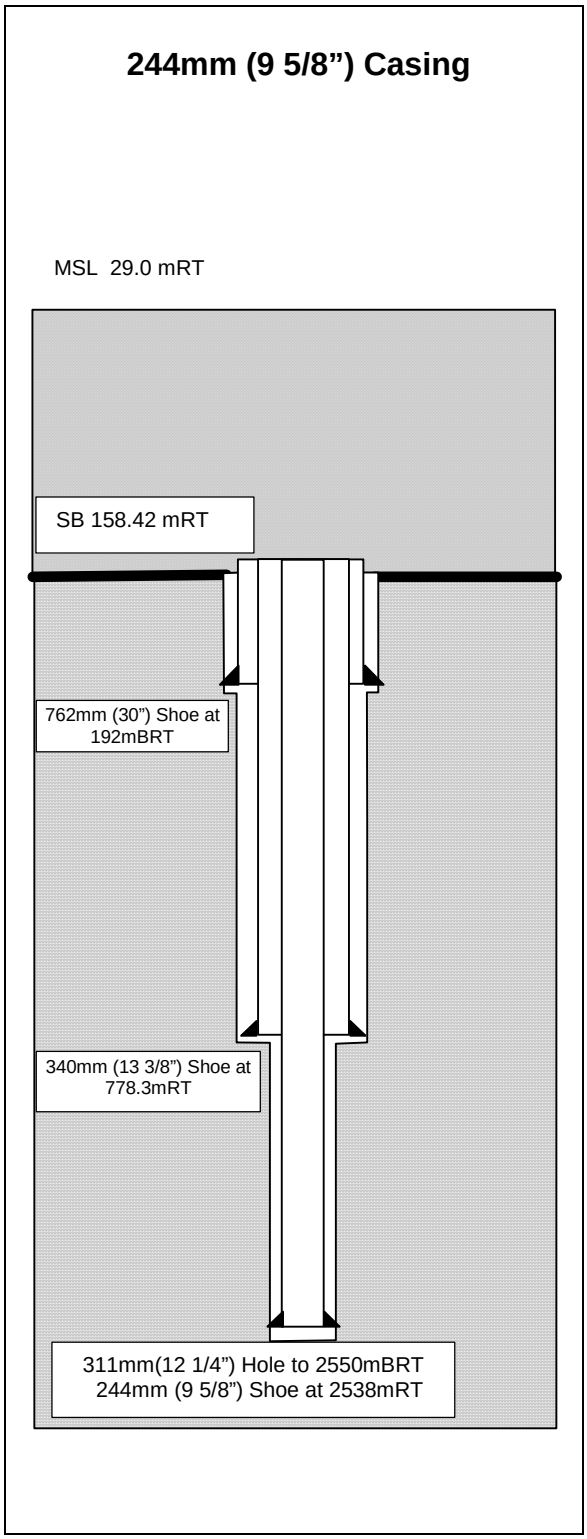

Abandonment Program

11th November 2004

Cement Details:

Plugs 1, 2 & 3:

Sacks	223
Type	"G"
Additives	27gal/10bbl HALAD-413L 5gal/10bbl SCR100L
Weight	15.8 ppg
Yield	1.16 ft^3/sx
Volume	46bbls

Plug 4:

Sacks	195
Type	"G"
Additives	27gal/10bbl HALAD-413L 6gal/10bbl HR6
Weight	15.8 ppg
Yield	1.16 ft^3/sx
Volume	41bbls

Plug 5:

Sacks	120
Type	"G"
Weight	15.8 ppg
Yield	1.17 ft^3/sx
Volume	46bbls

Summary

Ran in hole with a cement stinger to 3914m and circulated bottoms up. The surface lines were tested, 15bbls of drill water was spotted before 46bbls of cement was pumped from 3914m to 3714m. The stinger was pulled to above the cement and circulated clean. The second cement plug of 46bbl was set between 3714 – 3514m. The stinger was pulled to above the cement and was circulated clean. A third balanced plug of 46bbls was then set between 3514 and 3314m. The stinger was then pulled out of hole to surface where the 9 5/8" cement retainer was made up and run in hole. The packer was set at 2510m and an injectivity test was performed. The stinger was un-stung, a 20bbl spacer was pumped before 28bbls of cement was pumped. A 5bbl spacer was pumped and the stinger was stung back into the packer and 20bbls of cement was squeezed.
Pulled out of packer again and pumped 13bbls of cement on top of packer. Pulled back to 2500m and circulated clean before the well was displaced to 1.09sg inhibited mud. A static flowcheck was performed before it was pulled out of hole laying out drill pipe. The wear bushing was pulled before the 9 5/8" casing was cut. The well was monitored for pressure before recovering the casing and seal assembly. The cement stinger

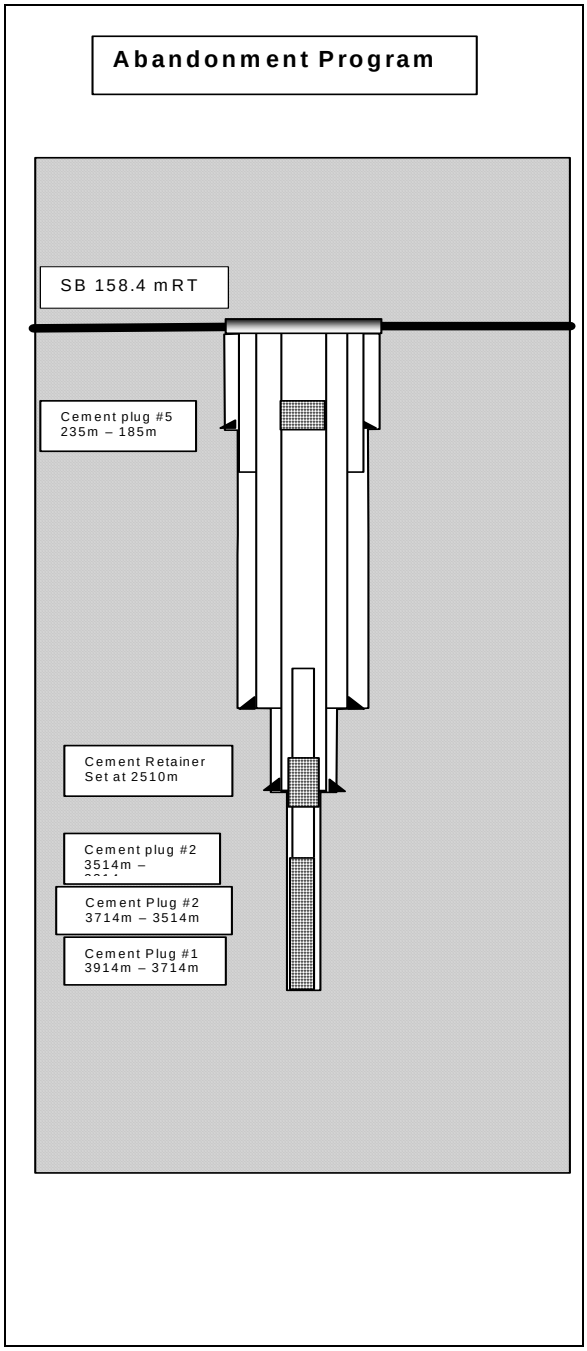

was run in hole again to 235m where the pipe rams were closed in order to test the cement retainer plug to 500psi. The rams were opened and the well was displaced to sea water. The last cement plug was set between 235 and 185m using 25bbls of cement. POOH and rigged up to pull BOPs. The 13 3/8" casing cutter was run in and casing was cut at 170m. The casing stub, PGB and wellhead housing was pulled out and laid out.

SECTION 3

SURVEY

3.0 Surveys

Callister-1

The surveys in the Callister-1 were from an Anadrill MWD tool run as part of the drilling string. The inclination, azimuth and depth of these surveys are listed below. Inclinations are listed from the start of the hole.

Depth	Inclination	Azimuth
299mRT	0.50 degrees	0.00
385mRT	1.00 degrees	0.00
414mRT	1.00 degrees	0.00
446mRT	1.00 degrees	0.00
471mRT	1.50 degrees	0.00
557mRT	1.00 degrees	0.00
615mRT	0.50 degrees	0.00
643mRT	0.50 degrees	0.00
672mRT	1.00 degrees	0.00
701mRT	1.00 degrees	0.00
728mRT	0.50 degrees	0.00
756mRT	1.00 degrees	0.00
787mRT	1.00 degrees	0.00
790mRT	0.45 degrees	331.69
817mRT	0.45 degrees	330.23
847mRT	0.69 degrees	337.63
874mRT	1.05 degrees	344.29
903mRT	1.25 degrees	333.65
931mRT	1.37 degrees	331.34
959mRT	0.22 degrees	170.41
990mRT	1.04 degrees	330.11
1016mRT	1.00 degrees	334.61
1037mRT	1.03 degrees	330.72
1073mRT	0.97 degrees	332.91
1101mRT	1.29 degrees	326.69
1130mRT	1.38 degrees	328.84
1159mRT	1.19 degrees	326.05
1188mRT	1.09 degrees	328.96
1216mRT	1.00 degrees	326.02
1245mRT	1.04 degrees	326.14
1274mRT	1.16 degrees	320.05
1303mRT	0.91 degrees	307.43
1332mRT	0.59 degrees	319.05
1361mRT	0.51 degrees	310.54
1390mRT	0.53 degrees	314.61
1417mRT	0.62 degrees	318.06
1447mRT	0.51 degrees	316.13
1476mRT	0.56 degrees	320.25
1503mRT	0.49 degrees	302.77
1532mRT	0.49 degrees	296.48
1560mRT	0.41 degrees	312.01
1588mRT	0.41 degrees	306.97
1674mRT	0.58 degrees	302.18
1759mRT	0.77 degrees	300.09
1847mRT	0.95 degrees	294.58
1930mRT	0.89 degrees	302.24

Depth	Inclination	Azimuth
2017mRT	0.91 degrees	307.00
2103mRT	0.96 degrees	309.22
2187mRT	0.94 degrees	306.90
2273mRT	1.01 degrees	323.23
2358mRT	0.97 degrees	322.75
2445mRT	0.96 degrees	329.95
2524mRT	1.01 degrees	330.09
2559mRT	0.98 degrees	331.10
2616mRT	1.09 degrees	335.82
2701mRT	1.08 degrees	328.22
2786mRT	0.87 degrees	334.96
2873mRT	0.47 degrees	315.46
2960mRT	0.37 degrees	282.26
3045mRT	0.47 degrees	240.13
3129mRT	0.54 degrees	224.15
3215mRT	0.92 degrees	224.41
3303mRT	1.31 degrees	213.64
3330mRT	1.43 degrees	212.93
3358mRT	1.62 degrees	214.79
3386mRT	1.69 degrees	213.08
3414mRT	1.67 degrees	214.65
3473mRT	2.20 degrees	213.29
3528mRT	2.23 degrees	216.78
3557mRT	2.26 degrees	215.08
3586mRT	2.18 degrees	216.17
3700mRT	2.17 degrees	212.69
3787mRT	2.50 degrees	209.01
3898mRT	2.70 degrees	196.27

SECTION 4

GEOLOGY AND SHOWS

4.1 Geology and Shows

Geological logging for Callister-1 commenced at 787mRT below the 340mm (13 3/8") casing shoe at 778.3mRT to the total depth of 3914mRT.

During the course of the well, all gas equipment was checked and calibrated regularly, and spot samples were taken at drilling breaks and other changes in drilling parameters to better assess lithological change. Calcimetry analyses were undertaken every 50m from 787m to 3914m.

The Lithology as logged in Callister-1 is described below. For further detailed descriptions, see Appendix 1, Formation Evaluation Log.

Samples were collected at the following intervals :

Callister-1	
787m – 790m	3m
790m - 815m	5m
815m – 820m	Blocked possum belly
820m - 845m	5m
845m - 850m	Change the shaker screen
850m - 2150m	5m
2150m - 2155m	Change the shaker screen
2155m – 3150m	5m
3150m – 3914m	3m

Lithological Descriptions:

787m to 853m: MARL interbedded with CALCAREOUS CLAYSTONE, CALCARENITE, CALCILUTITE.

MARL: Very light grey to light greenish grey, very argillaceous, trace quartz fragments, very soft to dispersive, sticky, occasionally firm, amorphous, occasionally sub-blocky.

CALCAREOUS CLAYSTONE: Light olive grey to greenish grey, grading to Marl in-part, trace foraminifera, moderately hard to hard, sticky, minor amorphous.

CALCARENITE: Light grey to light olive grey, trace foraminifera, moderately hard, friable in-part, sub-blocky

CALCILUTITE: Light grey to greenish grey, commonly silt grains, moderate soft to firm, sub-blocky

There were no shows in this section.

The section from 787m to 853m was drilled with an average ROP of 38.19m/hr and ranged from 9.22m/hr to 93.80m/hr.

Total Gas Units	C1 ppm	C2 ppm	C3 ppm	IC4 ppm	NC4 ppm	IC5 ppm	NC5 ppm
0.06 – 0.24	46 - 70	0	0	0	0	0	0

853m to 1105m: DILWYN FORMATION: SANDSTONE interbedded with CLAYSTONE

SANDSTONE: Translucent to transparent, light grey, loose clean quartz grains, predominantly fine to medium grains size, common coarse, very coarse in-part, well sorting, sub-rounded to rounded, occasionally sub-angular, common quartz overgrowth, trace white calcareous cement, light grey argillaceous matrix, trace disseminated pyrite, trace glauconite nodules, poor to fair inferred porosity, no show

CLAYSTONE: Dominantly brownish grey to dark brown, grading to SILTSTONE in-part, non calcareous, trace micro pyrite, trace black carbonaceous specks inclusion, sticky, commonly homogeneous, amorphous, dispersive in-part, sub-blocky

There were no shows in this section.

The section from 853m to 1105m was drilled with an average ROP of 40.18m/hr and ranged from 5.28m/hr to 102.22m/hr.

Total Gas Units	C1 ppm	C2 Ppm	C3 ppm	IC4 ppm	NC4 ppm	IC5 ppm	NC5 ppm
0 – 0.01	34 - 68	0 – 3	0 - 1	0	0	0	0

1105m to 1131m: PEMBER MUDSTONE: CLAYSTONE interbedded with SANDSTONE

CLAYSTONE: brown to dark brown, grading to SILTSTONE in-part, non calcareous, trace micro pyrite, trace black specks inclusion, sticky, commonly homogeneous, amorphous, dispersive in-part, sub-blocky, plastic in-part

SANDSTONE: Translucent to transparent, light grey, loose clean quartz grains, predominantly fine to medium grains size, common coarse, very coarse in-part, well sorting, sub-rounded to rounded, occasionally sub-angular, common quartz overgrowth, trace white calcareous cement, light grey argillaceous matrix, trace disseminated pyrite, trace glauconite nodules, poor to fair inferred porosity, no show

There were no shows in this section.

The section from 1105m to 1131m was drilled with an average ROP of 48.90m/hr and ranged from 16.12m/hr to 74.06m/hr.

Total Gas Units	C1 ppm	C2 Ppm	C3 ppm	IC4 ppm	NC4 ppm	IC5 ppm	NC5 ppm
0.05 – 0.09	46 - 51	0	0	0	0	0	0

1131m to 1146m: PEBBLE POINT FORMATION: CLAYSTONE interbedded with SANDSTONE

CLAYSTONE: moderate brown to dark yellowish brown, grading to SILTSTONE in-part, trace pyrite, very soft to soft, sub-blocky, streaky, amorphous, homogeneous.

SANDSTONE: clear-translucent, white, yellowish brown, loose quartz grains, fine to medium, coarse to very coarse in part, moderate well sorted, sub angular to sub rounded, mod spherical, no cement, slightly silty argillaceous matrix, trace glauconite, trace pyrite, quartz overgrowth, trace black inclusion in-part, fair inferred porosity, no show.

There were no shows in this section

The section from 1131m to 1146m was drilled with an average ROP of 63.19/hr and ranged from 32.06m/hr to 85.95m/hr.

Total Gas Units	C1 ppm	C2 ppm	C3 ppm	IC4 ppm	NC4 ppm	IC5 ppm	NC5 ppm
0.08 – 0.09	43 – 48	0	0	0	0	0	0

1146m to 1152m: MASSACRE SHALE – CLAYSTONE with interbeds of SANDSTONE

CLAYSTONE: moderate brown to dark yellowish brown, grading to SILTSTONE in-part, trace pyrite, very soft to soft, sub blocky, plastic in parts, streaky, amorphous, homogeneous

SANDSTONE: clear-translucent, white, yellowish brown, loose quartz grains, fine to medium, coarse to very coarse in part, moderate well sorted, sub angular to sub rounded, mod spherical, no cement, slightly silty argillaceous matrix, trace glauconite, trace pyrite, quartz overgrowth, trace black inclusion in-part, fair inferred porosity, no shows

There were no shows in this section

The section from 1146m to 1152m was drilled with an average ROP of 37.80m/hr and ranged from 28.13m/hr to 49.72m/hr.

Total Gas Units	C1 ppm	C2 Ppm	C3 ppm	IC4 ppm	NC4 ppm	IC5 ppm	NC5 ppm
0.09 – 0.10	47 - 53	0	0	0	0	0	0

1152m to 1482m: TIMBOON FORMATION: SANDSTONE with interbedded CLAYSTONE and SILTSTONE

SANDSTONE: Commonly light brown aggregated, occasionally clear-translucent, loose quartz grains. The grain size ranges from fine to coarse at the top of the formation, fine to medium grained throughout out remainder of the formation, with occasional to minor amounts of coarse grains. The sandstone is moderately to poorly sorted, sub rounded to rounded with occasional sub angular grains. The sandstone is predominantly loose with no cement, although traces of pyrite cement is seen in the lower end of the formation. There was an argillaceous matrix, silty in parts. Traces of glauconite, quartz overgrowths, trace pyrite, black inclusions, mica and pyrite overgrowths. Poor to fair inferred porosity, no shows.

CLAYSTONE: Brown to dark brown, grading to SILTSTONE, non calcareous, trace black specks inclusion in part, amorphous, plastic in part, dispersive in part, homogeneous, sticky, sub-blocky

SILTSTONE: Brown to dark brown, abundant argillaceous, grading to CLAYSTONE in part, non calcareous, trace pyrite nodules, trace glauconite, soft, amorphous, dispersive in part, sub-blocky.

There were no shows in this section.

The section from 1152m to 1482m was drilled with an average ROP of 8.77m/hr and ranged from 2.11m/hr to 11.93m/hr.

Total Gas Units	C1 Ppm	C2 ppm	C3 ppm	IC4 ppm	NC4 ppm	IC5 ppm	NC5 ppm
0.06 – 0.38	38 – 263	0 – 3	0 – 8	0	0	0	0

1482m to 1891m: PAARATTE FORMATION: SANDSTONE with interbedded SILTSTONE

SANDSTONE: clear-translucent, white, yellowish brown, loose quartz grains. The grain size ranges from medium to coarse, rare very coarse, occasionally fine grains, poorly sorted, sub rounded to rounded with occasional sub angular grains. The sandstone is predominantly light grey argillaceous matrix, slightly siliceous cement, moderately strong calcareous cement in part, trace pyritic, silty in parts. Traces of glauconite, quartz overgrowths, trace pyrite, black carbonaceous specks inclusions, mica, pyrite overgrowths and coal, moderately hard to hard friable in part, Poor to fair inferred porosity, no shows.

SILTSTONE: Brown to dark brown, dark grey to dark brownish grey, abundant argillaceous, grading to CLAYSTONE in part, non calcareous, trace pyrite nodules, trace glauconite, trace lithic fragments, soft, amorphous, dispersive in part, sub-blocky.

There were no shows in this section.

The section from 1482m to 1891m was drilled with an average ROP of 36.79m/hr and ranged from 4.20m/hr to 99.06m/hr.

Total Gas Units	C1 Ppm	C2 ppm	C3 ppm	IC4 ppm	NC4 ppm	IC5 ppm	NC5 ppm
0.23 – 18.3	101 – 4451	0 – 43	0 – 3	0	0 - 3	0	0

1891m to 2225m: <u>INTRA-PAARATTE FORMATION:</u> SILTSTONE with interbedded SANDSTONE

SILTSTONE: Generally dark brown to olive grey, dark brown to dark grey, sandy in-part to very arenaceous, slightly to very argillaceous, grading to very fine SANDSTONE, non calcareous, common black carbonaceous specks, trace to rare pyrite nodules, trace to common disseminated glauconite, trace yellowish brown to tan dolomite grains, soft to dispersive, firm in-part, amorphous to slightly sticky, sub-blocky

SANDSTONE: light grey to yellowish brown aggregates, occasional loose quartz grains, translucent to transparent to light grey grains. Very fine to fine, fine to medium, minor to occasional coarse, moderately to poorly sorted, grading to a SILTSTONE in places. Sub rounded to rounded, occasional sub angular, siliceous cement, traces of strong calcareous cement, light brown to white argillaceous cement, traces glauconite, traces of black inclusions, moderately hard to very hard, friable in parts, poor inferred porosity, no shows, traces of mineral fluorescence in parts.

There were no shows in this section.

The section from 1891m to 2225m was drilled with an average ROP of 26.16m/hr and ranged from 4.39m/hr to 93.81m/hr.

Total Gas Units	C1 ppm	C2 ppm	C3 ppm	IC4 ppm	NC4 ppm	IC5 ppm	NC5 ppm
1.26 – 28.11	250 - 7212	0 - 107	0 – 3	0	0 - 0	0	0

2225m to 2268m: <u>NULLAWARRE GREENSAND</u> – SILTSTONE with SANDSTONE interbeds

SILTSTONE: dark brown to dark grey, grading to a fine SANDSTONE in parts, non calcareous, trace black carbonaceous specks, trace to common glauconite aggregates, rare to trace pyrite, trace light brown dolomite, trace crystalline calcareous, soft to dispersive, firm in parts, sub blocky.

SANDSTONE: clear to translucent loose quartz grains. Coarse to medium, minor coarse, poorly sorted. Sub angular to sub round, trace weak siliceous cement, trace argillaceous matrix, trace pyrite, trace to common glauconite, trace glauconite inclusions, trace crystalline calcite, trace dolomite crystals, poor inferred porosity, no shows.

There were no shows in this section.

The section from 2225m to 2268m was drilled with an average ROP of 29.14m/hr and ranged from 18.16m/hr to 51.05m/hr.

Total Gas Units	C1 ppm	C2 ppm	C3 ppm	IC4 ppm	NC4 ppm	IC5 ppm	NC5 ppm

7.96 – 31.67	3181 - 8290	50 – 102	0 – 3	2 - 4	0	0	0

2268m to 3141m: <u>BASE NULLAWARRE (BELFAST)</u> – SILTSTONE with minor interbedded SANDSTONE

SILTSTONE: olive grey to brownish grey, arenaceous, grading to a very fine to fine SANDSTONE in the upper part of the formation, argillaceous, grading to CLAYSTONE in parts of the lower formation, non to slightly calcareous, trace fine to medium sand grains, trace black specks, trace of carbonaceous material, rare light brown hard dolomite crystals, trace of very hard LIMESTONE, rare pyrite overgrowths, soft to firm, sticky in parts, dispersive in parts, amorphous to sub blocky

SANDSTONE: In the top part of the formation, translucent to clear loose quartz grains, minor yellowish brown aggregates, medium to coarse grains, poorly sorted, sub angular to sub rounded, trace weak siliceous cement, trace argillaceous matrix. In the lower part of the formation, predominantly aggregates, light grey, minor loose quartz grains, predominantly fine to medium, moderately sorted, strong siliceous cement, no cement in parts, argillaceous matrix in parts. Trace glauconite, rare pyrite, traces of dolomite crystals, trace calcite grains, hard to friable, poor inferred porosity, trace mineral fluorescence, no shows

There were no shows in this section.

The section from 2268m to 3141m was drilled with an average ROP of 32.66m/hr and ranged from 0.00m/hr to 122.80m/hr.

Total Gas Units	C1 ppm	C2 ppm	C3 ppm	IC4 ppm	NC4 ppm	IC5 ppm	NC5 ppm
2.0 – 65.9	509 – 14921	4 - 236	0 - 110	0 - 23	0 - 26	0 - 10	0 - 7

3141m to 3428m: <u>FLAXMANS FORMATION</u> - SILTSTONE with minor interbeds of SANDSTONE

SILTSTONE: dark grey to dark brown, very argillaceous, grading to a CLAYSTONE in parts, arenaceous, grading to a very fine SANDSTONE, traces of micro laminations, common black carbonaceous specks, rare quartz grains, trace white calcite grains, trace light brown dolomite grains, trace mica, rare micro glauconite, rare Inocreamus fragments, soft to very firm, sub blocky.

SANDSTONE: light grey to very light grey, very fine grained, well sorted, sub rounded, sub angular in parts, grading to an arenaceous SILTSTONE, strong siliceous cement, trace of calcareous cement, trace light grey to white argillaceous matrix, trace lithic fragments, trace pyrite overgrowths, trace very coarse fragments, moderately hard to hard, poor visual porosity, no shows

There were no shows in this section.

The section from 3141m to 3428m was drilled with an average ROP of 28.10m/hr and ranged from 9.36m/hr to 64.97m/hr.

Total Gas Units	C1 ppm	C2 ppm	C3 ppm	IC4 ppm	NC4 ppm	IC5 ppm	NC5 ppm
13 – 61	2056 - 11146	56 – 309	29 – 236	1 – 36	1 – 48	0 – 15	0 - 11

3428m to 3453m: <u>WAARRE 'C' FORMATION</u> – interbedded SANDSTONE and SILTSTONE

SILTSTONE: dark brown to dark grey, argillaceous in parts, arenaceous, grading to a very fine SANDSTONE, trace carbonaceous specks and minor laminations, trace micro glauconite inclusions, trace micro mica, trace coarse loose quartz grains, rare pyrite, soft to firm, sub blocky.

SANDSTONE: light grey to very light grey, very fine to fine, minor medium, generally well sorted, sub rounded, strong siliceous cement, trace calcareous cement in part, common argillaceous and silty matrix, grading to SILTSTONE, trace to locally common carbonaceous specks, moderately hard to hard, friable aggregates in part, poor inferred porosity, common brown yellow mineral fluorescence.

There were shows in this section.

In SANDSTONE (3429 – 3432): trace moderately bright yellow fluorescence, slow yellow crush cut, faint yellow ring residue.

In SANDSTONE (3432 – 3435): rare moderately bright yellow fluorescence, slow yellow crush cut, faint yellow ring residue.

The section from 3428m to 3453m was drilled with an average ROP of 26.84m/hr and ranged from 12.84m/hr to 50.51m/hr.

Total Gas Units	C1 ppm	C2 ppm	C3 ppm	IC4 ppm	NC4 ppm	IC5 ppm	NC5 ppm
14 - 58	3043 – 12455	98 – 294	38 – 120	0 – 10	4 – 22	0 – 5	0 - 6

3453m to 3468m: <u>WAARRE 'B' FORMATION</u> – SANDSTONE with interbedded SILTSTONE

SILTSTONE: dark brown to dark grey, argillaceous in parts, arenaceous, trace carbonaceous specks and minor laminations, trace micro mica, trace coarse loose quartz grains, firm, sub blocky.

SANDSTONE: generally white to very light grey, minor dark grey, fine to medium, rare coarse, poor sorting, sub-angular to sub-rounded, trace siliceous cement, trace to common argillaceous matrix, trace lithics, poor visual porosity, poor to fair inferred porosity, common mineral fluorescence, no hydrocarbon fluorescence.

There were no shows in this section.

The section from 3453m to 3468m was drilled with an average ROP of 20.06m/hr and ranged from 12.40m/hr to 45.94m/hr.

Total Gas Units	C1 ppm	C2 ppm	C3 ppm	IC4 ppm	NC4 ppm	IC5 ppm	NC5 ppm
36 – 62	7748 – 11837	146 – 207	54 – 75	4 – 6	11 – 14	2 – 4	2 – 5

3468m to 3830m: <u>WAARRE 'A' FORMATION</u> – SANDSTONE with interbedded SILTSTONE

SILTSTONE: brown to light grey, argillaceous in parts, very arenaceous, mgrading to very fine Sandstone trace carbonaceous specks and minor laminations, trace micro mica, trace coarse loose quartz grains, firm, sub blocky.

SANDSTONE: generally white to very light grey, minor dark grey, light bronish grey, generally very fine to medium grained, poor sorting, sub-angular to sub-rounded, common strong siliceous cement, trace calcareous cement, trace to common light grey argillaceous matrix, trace lithics, poor visual porosity, poor to fair inferred porosity, common mineral fluorescence, no hydrocarbon fluorescence.

There were no shows in this section.

The section from 3468m to 3873m was drilled with an average ROP of 17.6m/hr and ranged from 1.8m/hr to 65.7m/hr.

Total Gas Units	C1 ppm	C2 ppm	C3 ppm	IC4 ppm	NC4 ppm	IC5 ppm	NC5 ppm

0 - 202	8526-75924	126-1079	49-288	1-27	6-54	0-15	0-14

3873m to 3914 TD: EUMERALLA FORMATION – SANDSTONE with interbedded SILTSTONE

SILTSTONE: medium to light olive grey, medium bluish grey,arenaceous to argillaceous, weakly to non calcareous, trace to common carbonaceous specks and micro-laminations, trace micro-mica, trace coarse loose quartz grains, firm, sub blocky to blocky.

SANDSTONE: light olive grey, white to very light grey, occasionally light brown, generally very fine to medium grained, moderately hard to very hard aggregates, occasionally friable aggregates, poor sorting, sub-angular, trace loose moderatelt rounded, abundant moderately strong to strong calcareous cement, trace to common light grey argillaceous matrix, trace micro-mica, trace black lithics, poor visual porosity, poor to fair inferred porosity, common mineral fluorescence, no hydrocarbon fluorescence.

COAL: Black, subvitreous, striated, firm to brittle, subfissile, uneven fracture.

There were no shows in this section.

The section from 3873m to 3914m was drilled with an average ROP of 13m/hr and ranged from 5.7m/hr to 24.5m/hr.

Total Gas Units	C1 ppm	C2 ppm	C3 ppm	IC4 ppm	NC4 ppm	IC5 ppm	NC5 ppm
4 - 251	10225-17958	159-305	61-147	7-22	12-36	2-14	1-10

4.2 Sampling Summary and Record of Distribution

Total Number of Boxes : 37

		COMPOSTITION			Packing Details
SAMPLE TYPE	No. of Sets	Sample Box No	Depth Interval (m) From	To	and notes
washed and dried	6	1	787	885	**each set pack in 1 box Box-1**
		2	885	970	
		3	970	1060	
		4	1060	1115	
		5	1115	1200	
		6	1200	1290	
		7	1290	1380	
		8	1380	1485	
		9	1485	1605	**each set pack in 1 box Box-2**
		10	1605	1720	
		11	1720	1820	
		12	1820	1905	
		13	1905	1990	
		14	1990	2090	
		15	2090	2180	
		16	2180	2265	
		17	2265	2355	**each set pack in 1 box Box-3**
		18	2355	2450	
		19	2450	2540	
		20	2540	2640	
		21	2640	2740	
		22	2740	2840	
		23	2840	2935	
		24	2935	3055	
		25	3055	3156	**each set pack in 1 box Box-4**
		26	3156	3219	
		27	3219	3285	
		28	3285	3354	
		29	3354	3432	
		30	3432	3486	
		31	3486	3546	
		32	3546	3597	
		33	3597	3660	**each set pack in 1 box Box-5**
		34	3660	3720	
		35	3720	3777	
		36	3777	3840	
		37	3840	3879	
		38	3879	3914	
Samplex Tray	3	1	787	3339	**each set pack in 1 box**
		2	3339	3914	
Geochemistry Samples	1	1	2050	2500	**Consisted of 3 boxes**
		2	2500	2950	
		3	2950	3300	
Mud Samples	1	1	-	-	**1 small box**

Sample Destination:

Samples for Callister-1 were distributed as detailed below. Set 1 sent to DPI (c/o address below). Sets 2- 6 sent to Santos Core Library (address below) for onward distribution.

Set 1 (100g Cuttings Sample) sent to:

DPI
c/o Santos Core Library
Ascot Transport
30 Francis Street
Port Adelaide, SA 5015

Set 2 (200g Cuttings Sample) sent to:

Geoscience Australia
Attn:Challenger Geology Services
Ascot Transport
30 Francis Street
Port Adelaide, SA 5015

Sets 3-5 (100g Cuttings Sample) sent to:

Santos Partners
c/o Santos Core Library
Ascot Transport
30 Francis Street
Port Adelaide, SA 5015

Set 6 (Samplex Trays) sent to:

Santos Ops. Geology, Adelaide
c/o Santos Core Library
Ascot Transport
30Francis Street
Port Adelaide, SA 5015

Set 7 (Mud samples) sent to:

Santos Ops. Geology, Adelaide
c/o Santos Core Library
Ascot Transport
30 Francis Street
Port Adelaide, SA 5015

Set 8 (Miscellaneous Samples/worksheets/charts etc.) sent to:

Santos Core Library
Ascot Transport
30 Francis Street
Port Adelaide, SA 5015

SECTION 5

PRESSURE EVALUATION

5.1 Pore Pressure Evaluation

Callister-1

On Callister-1, a water density of 1.04sg was assumed as normal saline pressure gradient for all calculations. The equivalent depth method was applied in the Dxc analysis, with all relevant drilling data, such as connection gas, trip gas, background gas, hole condition and mud flowline temperature all taken into consideration in the analysis of the formation pore pressure.

914mm (36”) Hole Section: 158.4 - 192mRT

No returns were seen in this section and a normal pore pressure regime of 1.04sg was assumed.

445mm (17 ½”) Hole Section: 192 – 787.4mRT

This hole section was also drilled riserless, with all returns to the seabed. The only pressure parameters monitored for this interval was the Dxc trend and the condition of the hole. Both indicate a normal pore pressure regime for the 445mm (17 ½”) hole section. The Dxc points within the top portion were highly scattered as expected, due to the very soft nature of the formation drilled. Down hole however, the formation was firmer, showing normal compaction. A normal pore pressure regime was likewise assumed for the entire hole section.

311mm (12 1/4”) Hole Section: 787.5 – 2550mRT

This section consisted predominantly of Siltstone and Claystone with inter-beds of Sandstone predominantly in the Dilwyn Fm. The pore pressure parameters monitored for this interval were the Dxc trend, hole condition, ditch gas and mud temperatures.

The 311mm (12 ¼”) hole section was drilled with a PDC bit and a fluid system of 1.06 - 1.09sg KCl/PHPA from 787 – 2550m. The Dxc values calculated while drilling this section were typical values representing drillability of mainly Siltstone and Mudstone rocks with a small section of higher percentage Sandstone. The Dxc value increases slowly with depth through a range of 0.07 – 0.1. The background gas is down around the 0.1 unit level. At 1470 – 1715m there is a kick back or decrease in the Dxc value trending from 1 – back to 0.7. This decrease in Dxc corresponds with an increase in background gas from 1 unit to 10 units as well as significant sandstone stringers. This trend repeats itself from 1715 – 1870m. From 1870m to 2230m the Dxc trend remains constant at 0.9 – 1. At 2230m there is a quick decrease for 40m from 1.0 back to 0.7. This trend corresponds with an increase in Sandstone in the same interval. Whilst taking into account the varying drilling parameters applied in order to optimize penetration rates, a normal pore pressure regime of 0.98sg EMW was estimated for this hole section.

216mm (8 1/2”) Hole Section: 2550 – 3914mRT

After a leak off test of 1.76sg this section of the hole was drilled with 2 PDC bits and a fluid system ranging from 1.13 to 1.56sg KCl PHPA. The Dxc trend in the first bit run from 2550 – 2662m was impossible to establish due to erratic drilling parameters and very low ROP. The second bit run showed considerable changes in mud weights, ROPS and Dxc trends. At 2662 – 2770m the Dxc trend is normal slowly increasing with depth, however at 2770m there is a definite kick back or decrease in Dxc. This shows a definite change and increase in pore pressure and goes from 2770 – 2890m. At 2900m there is a rise in mud weight to 1.15sg and then again to 1.26sg at 3016m at which points we see a steady decrease in Dxc. At 3200 – 3370m the Dxc trend reverses and shows a steady increase with depth. From 3370 – 3500m there are three severe cut backs in Dxc quickly followed every 40m by the trend returning to normal along with an increase in MW to 1.39sg we see the first signs of overpressure with a jump in background gas levels along with connection gas. The background gas levels jumped from less than 50 units to over 100units at 3475m. We also see our first connection gas of 1226 units at 3487m which indicates a pore pressure well in excess of the mud weight during connections but lower than the ECD during drilling as no gains were recorded although the well was flow checked. This also corresponds with the appearance of our first major Sandstone beds. From here our mud weight was increased to 1.44sg at 3630m then 1.46sg at

3652m then 1.54sg at 3788m and finally 1.56sg before the end of the well and TD at 3914m. Connection gases were observed from 3487m until TD. The mud weight was raised further at TD to 1.69sg to try and stop further gas influxes whilst pulling out of the hole.

Based on gas values and mud temperatures recorded, coupled with hole conditions observed while drilling, abnormal pore pressure was indicated. The gas recorded throughout the section was quite high and many connection gases were observed. Coupled with the high mud weight, connection gases there was also trip gas and pumps off gas recorded of up to 5415 units and a record connection gas of 2750 units at 3515m. All this evidence points to some quite highly over pressured sands and a pore pressure in these sands close to the LOT of 1.76sg. A pore pressure of 1.84sg is possible for the over pressured sands. This was worked out using a mud weight of 1.39sg at 3450m.

5.2 Fracture Pressure Evaluation

The 914mm (36”) and the 445mm (17 ½”) holes were drilled with seawater with returns to the seabed.

After drilling out the 340mm (13 3/8 ”) casing shoe, 3m of new 311mm (12 ¼”) hole was drilled to 790.5mRT where a Formation Integrity Test (FIT) was performed. The test was achieved with 590 psi surface pressure using 1.06 sg mud density, giving an integrity test of 1.59 sg EMW. Full returns were observed while drilling this section. Approximately 55 bbl losses were encountered during the trip out and static losses of 3 bbl/hr were observed whilst rigging up for the casing run.

A Leak Off Test (LOT) was performed in the 216mm (8-1/2”) hole after drilling 3m of new formation from 2550m to 2553m. The test was performed with 2390 psi surface pressure using 1.09 sg mud weight giving an EMW of 1.76 sg. No seepage losses were observed while drilling this section. The mud weight while drilling was kept between 1.09 and 1.56 sg, which produced an ECD of up to 1.74 sg.

The following is a summary of the leak off tests conducted in this well:

Hole Diameter	Hole Depth	Casing	Shoe Depth	Pressure	Mud Weight	EMW
311mm (12 ¼”)	790.5mRT	13-3/8”	778.4 m	590 psi	1.06 sg	1.59 sg
216mm (8 ½”)	2553mRT	9-5/8”	2538 m	2390 psi	1.76 sg	14.7 sg

TABLES

BAKER HUGHES INTEQ

Bit Run Summary

Operator	Well Name	Location	Drilling Contractor	Rig
Santos Ltd	**Callister-1**	**Vic/P51**	**Transocean Sedco Forex**	**Jack Bates**

Total Bit Revolutions = Surface RPM + Motor RPM

Bit No.	Bit Make, Type Serial No. / IADC Code	Bit Size *in*	Jets *x 1/32"*	TFA *in/2*	BHA Type	Depth In *m*	Depth Out *m*	Metres Drilled	On Btm Hours Drilled	ROP Avg *m/hr*	TBR *x1000*	Drilling parameter range: WOB *klbs*	SPP *psi*	RPM Surface/ Motor	Flow *gpm*	Jet Vel *m/sec*	DC/OH Vel *m/min*	MD *sg*	Bit Power *hhp*	Bit Loss *psi*	Grading: I	O	D	L	B	G	O	R	Remarks
762mm (36") Hole Section																													
NB1	Security SGSJ4	660mm (26")	2x22, 1x20	1.049	ROTARY	158.0	192.0	33.6	2.2	15.30	8.2	2-5	651	65	627						0	0	NO	A	X	I	NO	TD	Drill with seawater and gel sweeps
	668369 / 1-1-1	762mm (36")																											
445mm (17 1/2") Hole Section																													
NB 2	Reed T111	445mm (17 1/2")	3x22,1x20	1.421	ROTARY	192.0	787.0	595.0	24.3	38.20	17.2	1-37	2353	116	1051						4	4	WT	A	4	I	NO	TD	Drill with seawater and gel sweeps
311mm (12 1/4") Hole Section																													
NB3	Reed DSX194	311mm (12 1/4")	9 x 11	0.835	ROTARY	787.0	990.0	203.0	8.6	23.50	90.5	1.5-22	2112	76	870	99	74	1.06	-	728.0	8	8	RO	A	X	I	E	PR	Drill with seawater and gel sweeps
NB4	Reed DSX194	311mm (12 1/4")	5 x 14	0.835	ROTARY	990.0	2550	1560.0	57.6	27.10	649	0.8-18.5	2513	189	870	110	51	1.09	-	899.0	6	5	WT	A	IN	X	ER	TD	Drill with KCl PHPA fluid system
216mm (8 1/2") Hole Section																													
NB5	Reed RSX272	216mm (8 1/2")	5 x 14, 2x10	0.905	ROTARY	2550	2662	112.0	5.3	21.13	39.9	2-22	2421	130	600	213	149	1.12	2	330.0	3	1	BU	A	X	I	CT:WT	PR	Drill with KCl PHPA fluid system
NB6	Reed DSX104	216mm (8 1/2")	5 x 15	0.863	ROTARY	2662	3914	1252.0	60.1	20.83	458.2	0-28	3707	128	655	223	149.4	1.56	3	502.0	2	2	WT	A	X	I	CT	TD	Drill with KCl PHPA fluid system

BAKER HUGHES INTEQ

Bit Hydraulics Summary

Operator	Well Name	Location	Drilling Contractor	Rig
Santos Ltd	**Callister-1**	**Vic/P51**	**Transocean Sedco Fore**	**Jack Bates**

Drillstring Abbreviations

N Normal
M MWD
P Positive Displacement Motor
A Adjustable Gauge Stabilizer
C Core

Hydraulics Models

Power Law Model used for drilling with Mud
Bingham Model used for coring and drilling with sea water

Bit No.	Depth AHD (m)	Hole Size in	Jets x 1/32"	Drill String Type	Mud Type	Mud Density sg	PV cP	YP lbs/100 ft sq	Flow Rate gpm	Jet Vel m/sec	Impact Force lb/in2	Hydraulic Power hhp	Power/ Area hp/sq in	Bit Loss Psi	Bit Loss %	Pipe Loss Psi	ECD sg	Annular Velocities DP OH m/min	Annular Velocities DC OH m/min	Annular Velocities DC Critical m/min
17 1/2" Hole Section																				
NB 2	192	445mm (17 1/2")	3 x 22, 1 x 20	N	SW/Gel	1.03														
12 1/4" Hole Section																				
NB3	895	311mm (12 1/4")	9 x 11	M	KCl / PHPA	1.06	12	15	850	99	11	-	3.1	728	35.5	235	1.07	50	106	-
NB4	1403	311mm (12 1/4")	5 x 14	M	KCl / PHPA	1.07	15	20	870	112	12	-	4.0	931	36.8	449	1.08	51	107	-
NB4	1896	311mm (12 1/4")	5 x 14	M	KCl / PHPA	1.09	13	26	870	113	13	-	4.3	974	35.3	627	1.11	52	108	-
NB4	2066	311mm (12 1/4")	5 x 14	M	KCl / PHPA	1.09	14	25	861	112	13	-	4.1	954	34.2	685	1.11	51	107	-
NB4	2550	311mm (12 1/4")	5 x 14	M	KCl / PHPA	1.09	15	23	856	112	12.5	-	4.1	943	31.5	884	1.11	51	107	-
8 1/2" Hole Section																				
NB5	2662	8.5"	5 x 14, 2 x 10	M	KCL/PHPA	1.12	12	21	623	359	14	390.5	3.4	632	23.1	536	1.17	85	120	144
NB6	3914	8.5"	5 x 15	M	KCL/PHPA	1.56	23	32	600	223	16	372.0	2.7	502	11.8	1191	1.94	95	149	149

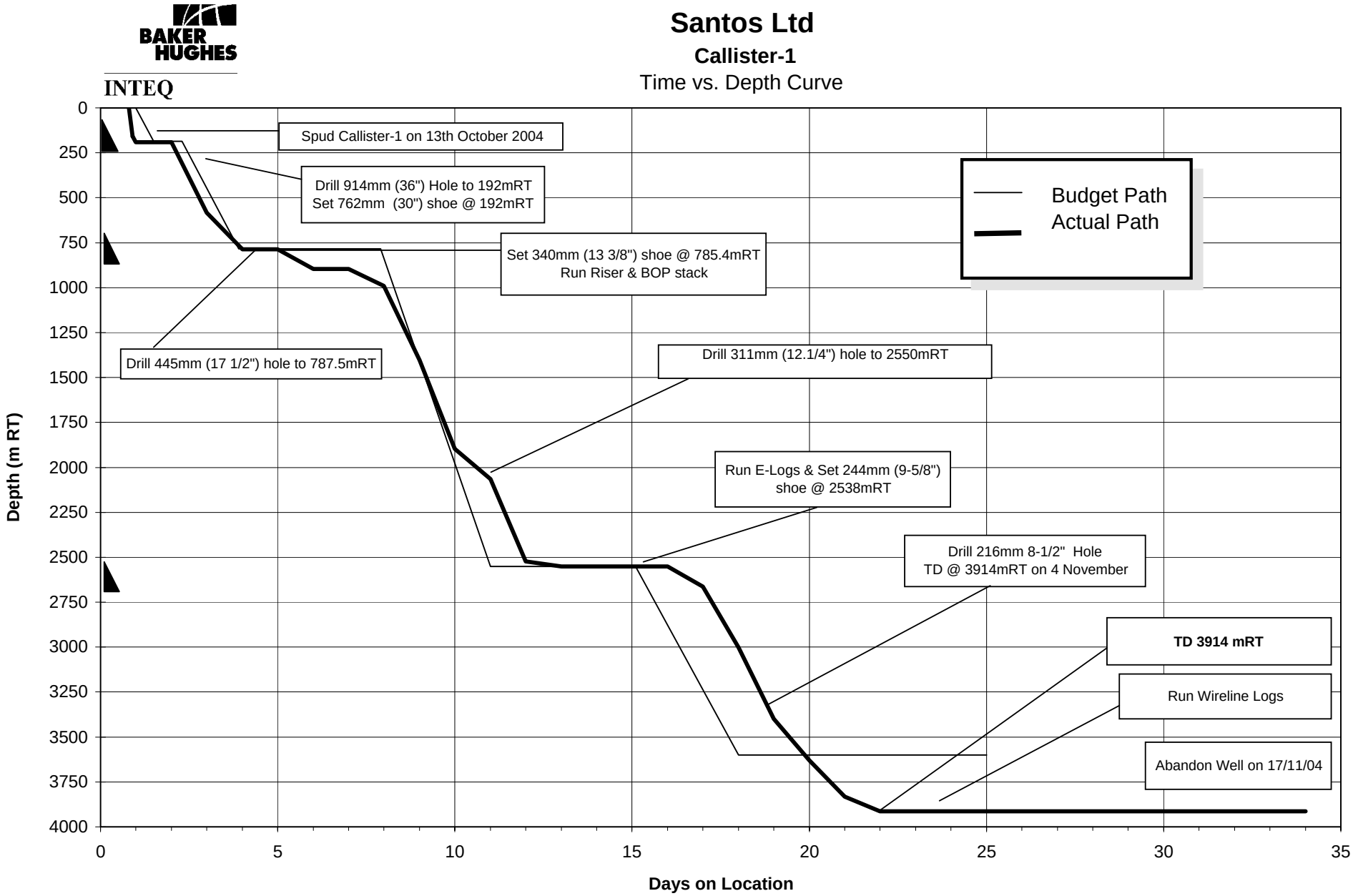
BAKER HUGHES
INTEQ
Santos Ltd
Callister-1
Time vs. Depth Curve
Spud Callister-1 on 13th October 2004
Drill 914mm (36") Hole to 192mRT
Set 762mm (30") shoe @ 192mRT
Set 340mm (13 3/8") shoe @ 785.4mRT
Run Riser & BOP stack
Budget Path
Actual Path
Drill 445mm (17 1/2") hole to 787.5mRT
Drill 311mm (12.1/4") hole to 2550mRT
Run E-Logs & Set 244mm (9-5/8")
shoe @ 2538mRT
Drill 216mm 8-1/2" Hole
TD @ 3914mRT on 4 November
TD 3914 mRT
Run Wireline Logs
Abandon Well on 17/11/04
Depth (m RT)
0
250
500
750
1000
1250
1500
1750
2000
2250
2500
2750
3000
3250
3500
3750
4000
0
5
10
15
20
25
30
35
Days on Location

APPENDICES

FORMATION EVALUATION LOG

1:500

DRILLING DATA PLOT

1:2500

PRESSURE EVALUATION PLOT

1:2500

GAS RATIO PLOT

1:500

SECTION 13: RIG POSITIONING REPORT

RIG POSITION FIELD REPORT
Callister-1

Client :	**Santos**	**Job Number :**	**P0139**
Rig :	**Jack Bates**	**Date:**	**15-Oct-04**
Project :	**Rig move to Callister-1 Bass Strait Victoria, Australia**		
Attention :	**L.Pilcher**	**Santos Survey Representative**	
Copy :	**B.Houston**	**Santos Company Man**	

The surface location of the drill stem on the Jack Bates was derived from one hour of observations of the Primary Differential GPS data, between 0009 hrs and 0109 hrs on completion of all anchor pre-tensioning and TGB being landed on the seafloor. The results of the observations are as follows:

Geographical Coordinates			**Grid Coordinates**	
Latitude	**38 ° 31 ' 59.690 " South**		**Easting**	**541241.7**
Longitude	**141 ° 28 ' 23.462 " East**		**Northing**	**5734911.3**

The drill stem position is **4.3 m** at a bearing of **77.6 °** Grid from the design location.

The Client supplied design location for Callister-1 :

Geographical Coordinates			Grid Coordinates	
Latitude	38 ° 31 ' 59.72 " South		Easting	541237.6
Longitude	141 ° 28 ' 23.29 " East		Northing	5734910.4

The Jack Bates's rig heading, derived from the mean of one hour's observation of the gyro heading is:

216.09 ° True 216.38 ° Grid

All coordinates in this field report are quoted in the following coordinate system:

Datum :	GDA94	Projection :	UTM	
Spheroid :	MGA	Zone (Central Meridian)	54	141 ° East

The approximate positions of the rig anchors corrected for catenary are as follows:

Anchor	Easting	Northing	Azimuth(°)
1	540157	5734396	244.0 °
2	540019	5734994	274.3 °
3	540756	5735954	335.1 °
4	541306	5736131	4.0 °
5	542264	5735378	65.1 °
6	542413	5734745	94.7 °
7	541703	5733843	156.6 °
8	541146	5733797	185.7 °

Party Chief/Surveyor: M.Elmslie

Client Representative : L.Pilcher

SECTION 14: WELL ABANDONMENT AND PLUG REPORT

Santos

ABANDONMENT CEMENT # 1

WELL: Callister-1 **DATE:** #########

ELEVATIONS: **RT to seabed (m):** 158.4 **T.D (m):** 3914

RT to MSL (m) : 29 **PBTD (m):** 3714

SERIES: Dril Quip SS-10C **REPORT BY:** Pat King

Cmt Plug #1 3914m to 3714m

PREFLUSH: Drillwater **Volume (bbl):** 15 **Density (ppg):** 8.34

Additive:	Amount Used:	Additive:	%	Amount Used

CEMENT:

TAIL SLURRY

		Class:	G	SX:	223	Halad 413	2	55
Mixwater gal/sk:	5.1	Yield cu.ft/sx:	1.16	Density ppg:	15.8	SCR 100	0.5	14
Volume pumpe	46	bbl Excess:	Calliper	% Oped hole				

Additive	gal/bbl	Amount Used (gal)
Halad 413	2	55
SCR 100	0.5	14

TAIL SLURRY (mixed with seawater)

Brand: Adelaide Brighton Ceme		Class:		SX:	
Mixwater gal/sk:		Yield cu.ft/sx:		Density ppg:	
Volume pumped		bbl Excess:		%	

Additive	gal/bbl	Amount Used (gal)

DISPLACEMENT

Fluid:	Mud	Calc. Displacement (bbl):	210			psi	Pressure Tested to		psi
Density ppg:	14.1	Actual Displacement (bbl)	205	at Rate:	5	bbl/min	Bleed Back:		bbl

ACTIVITY	Time
Pump Drill water spacer	############
Test Lines	############
Pump Drill water spacer	############
Mix & Pump Tail Slurry	############
Pump Drill water	############
Displace Slurry	############
Completed	############

Returns to Surface:				bbls cement
Reciprocate/Rotate Casing:				
During;	Circulating	Top Up Job run:		sacks of Class
	Cementing			
	Displacing			
	Wiper Plugs:		Type	
	Bottom			
	Top			
Cementing Contractor:	Halliburton			

CEMENT JOB DETAIL/REMARKS

Pumped 10 bbl of drill water, tested lines to 2000 psi, pumped 5 bbl of drill water.

Mixed & pumped 46 bbl (223 sx) of slurry @ 15.8 ppg (27 bbl mixwater)

Pumped 5 bbl drillwater then displaced with 205 bbl mud.

Backflow up cementing string after POH.

Santos

ABANDONMENT CEMENT # 2

WELL:	Callister-1			**DATE:**	11/11/2004
ELEVATIONS:		**RT to seabed (m):**	158.4	**T.D (m):**	3914
		RT to MSL (m) :	29	**PBTD (m):**	3514
		SERIES:	Dril Quip SS-10C	**REPORT BY:**	Pat King

Cmt Plug #2 3714m to 3514m

PREFLUSH: Drillwater **Volume (bbl):** 15 **Density (ppg):** 8.34

Additive:	Amount Used:	Additive:	%	Amount Used

CEMENT:

TAIL SLURRY

			Class:	G	**SX:**	223	Halad 413	2	55
Mixwater gal/sk:	5.1		**Yield cu.ft/sx:**	1.16	**Density ppg:**	15.8	SCR 100	0.5	14
Volume pumped	46	**bbl**	**Excess:**	Calliper	**% Oped hole**				

Additive	gal/bbl	Amount Used (gal)
Halad 413	2	55
SCR 100	0.5	14

TAIL SLURRY (mixed with seawater)

Brand: Adelaide Brighton Cement		**Class:**		**SX:**	
Mixwater gal/sk:		**Yield cu.ft/sx:**		**Density ppg:**	
Volume pumped		**bbl**	**Excess:**	**%**	

Additive	gal/bbl	Amount Used (gal)

DISPLACEMENT

Fluid:	Mud	**Calc. Displacement (bbl):**	200			**psi**	**Pressure Tested to**		**psi**
Density ppg:	14.1	**Actual Displacement (bbl):**	190	**at Rate:**	5	**bbl/min**	**Bleed Back:**		**bbl**

ACTIVITY	Time
Pump Drill water spacer	11/11/04 18:35
Test Lines	11/11/04 18:45
Pump Drill water spacer	11/11/04 18:48
Mix & Pump Tail Slurry	11/11/04 18:50
Pump Drill water	11/11/04 19:10
Displace Slurry	11/11/04 19:13
Completed	11/11/04 19:32

	Returns to Surface:			**bbls cement**
	Reciprocate/Rotate Casing:			
During;	**Circulating**	**Top Up Job run:**		**sacks of Class**
	Cementing			
	Displacing			
	Wiper Plugs:		**Type**	
	Bottom			
	Top			
	Cementing Contractor:	**Halliburton**		

CEMENT JOB DETAIL/REMARKS

Pumped 10 bbl of drill water, tested lines to 2000 psi, pumped 5 bbl of drill water.

Mixed & pumped 46 bbl (223 sx) of slurry @ 15.8 ppg (27 bbl mixwater) 0

Pumped 5 bbl drillwater then displaced with 190 bbl mud.

Santos

ABANDONMENT CEMENT # 3

WELL:	Callister-1			**DATE:**	11/11/2004
ELEVATIONS:		**RT to seabed (m):**	158.4	**T.D (m):**	3914
		RT to MSL (m) :	29	**PBTD (m):**	3314
		SERIES:	Dril Quip SS-10C	**REPORT BY:**	Pat King

Cmt Plug #3 3514m to 3314m

PREFLUSH: Drillwater **Volume (bbl):** 15 **Density (ppg):** 8.34

Additive:	Amount Used:	Additive:	%	Amount Used

CEMENT:

TAIL SLURRY

			Class:	G	**SX:**	223	Halad 413	2	55
Mixwater gal/sk:	5.1		**Yield cu.ft/sx:**	1.16	**Density ppg:**	15.8	SCR 100	0.5	14
Volume pumped	46	**bbl**	**Excess:**	Calliper	**% Oped hole**				

Additive	gal/bbl	Amount Used (gal)
Halad 413	2	55
SCR 100	0.5	14

TAIL SLURRY (mixed with seawater)

Brand: Adelaide Brighton Cement		**Class:**		**SX:**	
Mixwater gal/sk:		**Yield cu.ft/sx:**		**Density ppg:**	
Volume pumped		**bbl**	**Excess:**	**%**	

Additive	gal/bbl	Amount Used (gal)

DISPLACEMENT

Fluid:	Mud	**Calc. Displacement (bbl):**	190			**psi**	**Pressure Tested to**		**psi**
Density ppg:	14.1	**Actual Displacement (bbl):**	175	**at Rate:**	5	**bbl/min**	**Bleed Back:**		**bbl**

ACTIVITY	Time
Pump Drill water spacer	11/11/04 22:10
Test Lines	11/11/04 22:15
Pump Drill water spacer	11/11/04 22:20
Mix & Pump Tail Slurry	11/11/04 22:25
Pump Drill water	11/11/04 22:45
Displace Slurry	11/11/04 22:47
Completed	11/11/04 23:15

Returns to Surface:				**bbls cement**
Reciprocate/Rotate Casing:				
During;	**Circulating**	**Top Up Job run:**		**sacks of Class**
	Cementing			
	Displacing			
	Wiper Plugs:		**Type**	
	Bottom			
	Top			
Cementing Contractor:	**Halliburton**			

CEMENT JOB DETAIL/REMARKS

Pumped 10 bbl of drill water, tested lines to 2000 psi, pumped 5 bbl of drill water.

Mixed & pumped 46 bbl (223 sx) of slurry @ 15.8 ppg (27 bbl mixwater) 0

Pumped 5 bbl drillwater then displaced with 175 bbl mud.

Santos

ABANDONMENT CEMENT #4

WELL:	Callister-1			**DATE:**	12/11/2004
ELEVATIONS:		**RT to seabed (m):**	158.4	**T.D (m):**	3914
		RT to MSL (m) :	29	**PBTD (m):**	2510
		SERIES:	Dril Quip SS-10C	**REPORT BY:**	Pat King

Cmt Plug # 4 2568m to 2510m

PREFLUSH: Drillwater **Volume (bbl):** 40 **Density (ppg):** 8.34

Additive:	Amount Used:	Additive:	%	Amount Used

CEMENT:

TAIL SLURRY

						Additive	gal/bbl	Amount Used (gal)
		Class:	G	SX:	95	Halad 413	2	26
Mixwater gal/sk:	5.68	Yield cu.ft/sx:	1.18	Density ppg:	15.8	HR-6	0.6	8
Volume pumped	20 bbl	Excess:	Calliper	% Oped hole				

TAIL SLURRY (mixed with seawater)

						Additive	gal/bbl	Amount Used (gal)
Brand: Adelaide Brighton Cement		Class:		SX:				
Mixwater gal/sk:		Yield cu.ft/sx:		Density ppg:				
Volume pumped	bbl	Excess:		%				

DISPLACEMENT

Fluid:	Mud	Calc. Displacement (bbl):		800	psi	Pressure Tested to	psi
Density ppg:	14.1	Actual Displacement (bbl):	at Rate:	3.5	bbl/min	Bleed Back:	bbl

ACTIVITY	Time
Pump Drill water spacer	
Test Lines	
Pump Drill water spacer	
Mix & Pump Tail Slurry	
Pump Drill water	
Displace Slurry	
Completed	

Returns to Surface:			bbls cement
Reciprocate/Rotate Casing:			
During;	Circulating	Top Up Job run:	sacks of Class
	Cementing		
	Displacing		
	Wiper Plugs:	Type	
	Bottom		
	Top		
Cementing Contractor:	Halliburton		

CEMENT JOB DETAIL/REMARKS

Note: Cement Plugs #4 (Retainer Squeeze) & #5 (Balanced Plug) were pumped together.

Pumped 20 bbl of drill water, tested lines to 2000 psi, pumped 20 bbl of drill water.

Mixed & pumped 28 bbl (133 sx) of slurry @ 15.8 ppg (18 bbl mixwater) 0

Pumped 5 bbl drillwater then displaced with 108 bbl mud.

Stabbed into EZSV retainer and displaced to squeeze 20 bbl through retainer - 3.5 bpm @ 800 psi (Plug #4 2568m to 2510m)

Pulled out of retainer and displaced a further 6 bbl to spot 8 bbl of slurry (Plug #5 2455m to 2510m) on top of retainer.

Santos

ABANDONMENT CEMENT # 5

WELL:	Callister-1			**DATE:**	12/11/2004
ELEVATIONS:		**RT to seabed (m):**	158.4	**T.D (m):**	3914
		RT to MSL (m) :	29	**PBTD (m):**	2455
		SERIES:	Dril Quip SS-10C	**REPORT BY:**	Pat King

Cmt Plug #5 2510m to 2455m

PREFLUSH: Drillwater **Volume (bbl):** 40 **Density (ppg):** 8.34

Additive: **Amount Used:** **Additive:** **%** **Amount Used**

CEMENT:

TAIL SLURRY

			Class:	G	**SX:**	38	Halad 413	2	10
Mixwater gal/sk:	5.68		**Yield cu.ft/sx:**	1.18	**Density ppg:**	15.8	HR-6	0.6	3
Volume pumped	8	**bbl**	**Excess:**	Calliper	**% Oped hole**				

Additive **gal/bbl** **Amount Used (gal)**

TAIL SLURRY (mixed with seawater)

Brand: Adelaide Brighton Cement		**Class:**		**SX:**	
Mixwater gal/sk:		**Yield cu.ft/sx:**		**Density ppg:**	
Volume pumped	**bbl**	**Excess:**		**%**	

Additive **gal/bbl** **Amount Used (gal)**

DISPLACEMENT

Fluid:	Mud	**Calc. Displacement (bbl):**		**psi**	**Pressure Tested to**	**psi**	
Density ppg:	14.1	**Actual Displacement (bbl):**	**at Rate:**	**bbl/min**	**Bleed Back:**	**bbl**	

ACTIVITY	Time
Pump Drill water spacer	
Test Lines	
Pump Drill water spacer	
Mix & Pump Tail Slurry	
Pump Drill water	
Displace Slurry	
Completed	

Returns to Surface:			**bbls cement**
Reciprocate/Rotate Casing:			
During;	**Circulating**	**Top Up Job run:**	**sacks of Class**
	Cementing		
	Displacing		
	Wiper Plugs:	**Type**	
	Bottom		
	Top		
Cementing Contractor:	**Halliburton**		

CEMENT JOB DETAIL/REMARKS

Note: Cement Plugs #4 (Retainer Squeeze) & #5 (Balanced Plug) were pumped together.

Pumped 20 bbl of drill water, tested lines to 2000 psi, pumped 20 bbl of drill water.

Mixed & pumped 28 bbl (133 sx) of slurry @ 15.8 ppg (18 bbl mixwater) 0

Pumped 5 bbl drillwater then displaced with 108 bbl mud.

Stabbed into EZSV retainer and displaced to squeeze 20 bbl through retainer - 3.5 bpm @ 800 psi (Plug #4 2568m to 2510m)

Pulled out of retainer and displaced a further 6 bbl to spot 8 bbl of slurry (Plug #5 2455m to 2510m) on top of retainer.

Santos

ABANDONMENT CEMENT # 6

WELL:	Callister-1			**DATE:**	14/11/2004
ELEVATIONS:		**RT to seabed (m):**	158.4	**T.D (m):**	3914
		RT to MSL (m) :	29	**PBTD (m):**	185
		SERIES:	Dril Quip SS-10C	**REPORT BY:**	Pat King

Cmt Plug #6 235m to 185m

PREFLUSH: Drillwater **Volume (bbl):** 8 **Density (ppg):** 8.34

Additive:	Amount Used:	Additive:	%	Amount Used

CEMENT:

TAIL SLURRY

		Class:	G	**SX:**	120
Mixwater gal/sk:	5.25	**Yield cu.ft/sx:**	1.17	**Density ppg:**	15.8
Volume pumped	25 **bbl**	**Excess:**	Calliper	**% Oped hole**	

Additive	gal/bbl	Amount Used (gal)

TAIL SLURRY (mixed with seawater)

Brand: Adelaide Brighton Cement		**Class:**		**SX:**	
Mixwater gal/sk:		**Yield cu.ft/sx:**		**Density ppg:**	
Volume pumped	**bbl**	**Excess:**		**%**	

Additive	gal/bbl	Amount Used (gal)

DISPLACEMENT

Fluid:	Seawater	**Calc. Displacement (bbl):**	6			**psi**	**Pressure Tested to**	**psi**
Density ppg:	8.34	**Actual Displacement (bbl):**	6	**at Rate:**	5	**bbl/min**	**Bleed Back:**	**bbl**

ACTIVITY	Time
Pump Drill water spacer	14/11/04 2:37
Test Lines	14/11/04 2:45
Pump Drill water spacer	14/11/04 2:50
Mix & Pump Tail Slurry	14/11/04 2:55
Pump Drill water	14/11/04 3:05
Displace Slurry	14/11/04 3:06
Completed	14/11/04 3:10

Returns to Surface:			**bbls cement**
Reciprocate/Rotate Casing:			
During;	**Circulating**	**Top Up Job run:**	**sacks of Class**
	Cementing		
	Displacing		
	Wiper Plugs:	**Type**	
	Bottom		
	Top		
Cementing Contractor:	**Halliburton**		

CEMENT JOB DETAIL/REMARKS

Pumped 4 bbl of drill water, tested lines to 2000 psi, pumped 4 bbl of drill water.

Mixed & pumped 25 bbl (120 sx) of slurry @ 15.8 ppg (15 bbl mixwater) 0

Pumped 1 bbl drillwater then displaced with 6 bbl seawater.

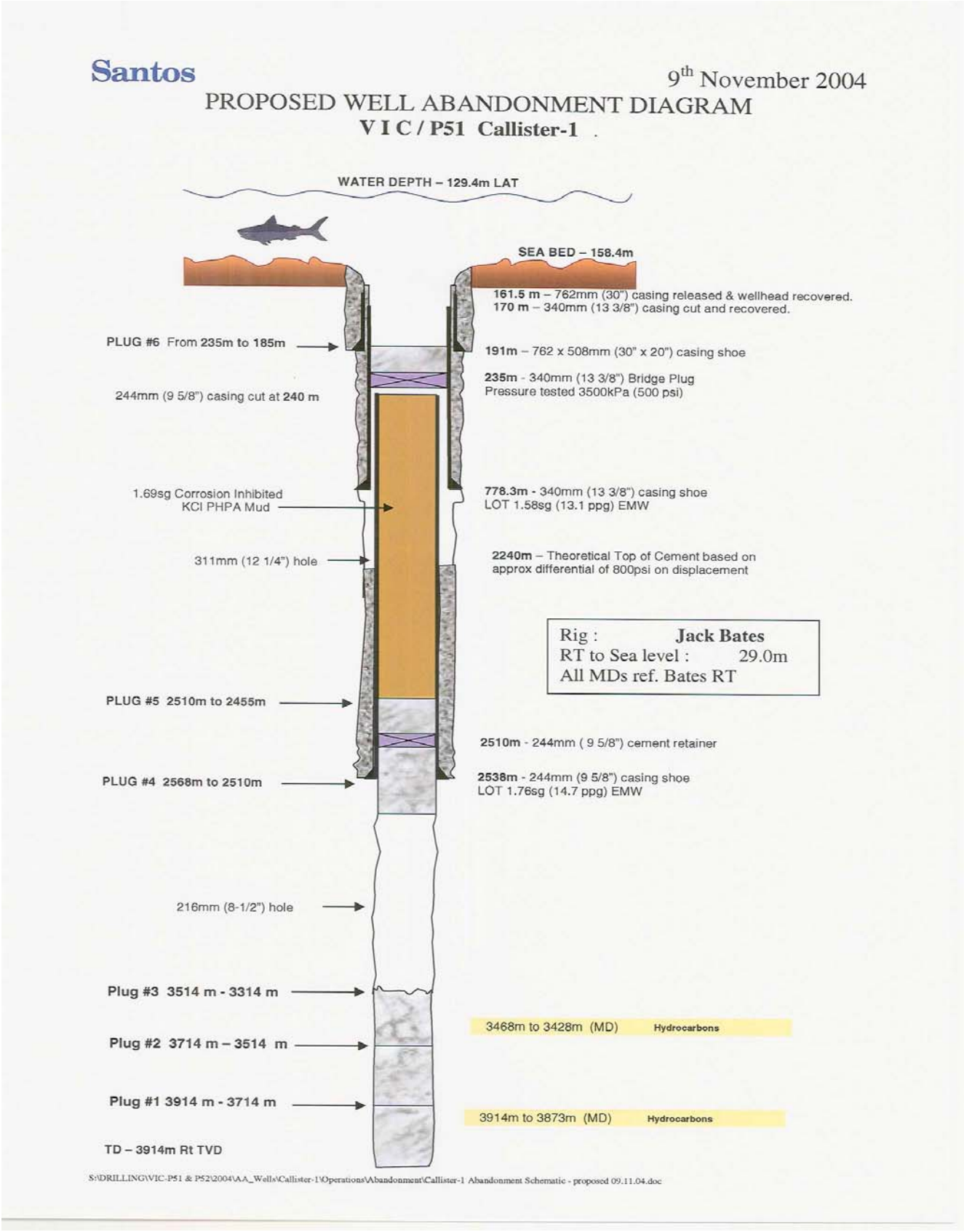
Santos
9th November 2004
PROPOSED WELL ABANDONMENT DIAGRAM
V I C / P51 Callister-1
WATER DEPTH – 129.4m LAT
SEA BED – 158.4m
161.5 m – 762mm (30") casing released & wellhead recovered.
170 m – 340mm (13 3/8") casing cut and recovered.
PLUG #6 From 235m to 185m
191m – 762 x 508mm (30" x 20") casing shoe
235m - 340mm (13 3/8") Bridge Plug
Pressure tested 3500kPa (500 psi)
244mm (9 5/8") casing cut at 240 m
1.69sg Corrosion Inhibited
KCl PHPA Mud
778.3m - 340mm (13 3/8") casing shoe
LOT 1.58sg (13.1 ppg) EMW
311mm (12 1/4") hole
2240m – Theoretical Top of Cement based on
approx differential of 800psi on displacement
Rig : Jack Bates
RT to Sea level : 29.0m
All MDs ref. Bates RT
PLUG #5 2510m to 2455m
2510m - 244mm (9 5/8") cement retainer
PLUG #4 2568m to 2510m
2538m - 244mm (9 5/8") casing shoe
LOT 1.76sg (14.7 ppg) EMW
216mm (8-1/2") hole
Plug #3 3514 m - 3314 m
3468m to 3428m (MD) Hydrocarbons
Plug #2 3714 m – 3514 m
Plug #1 3914 m - 3714 m
3914m to 3873m (MD) Hydrocarbons
TD – 3914m Rt TVD
S:\DRILLING\VIC-P51 & P52\2004\AA_Wells\Callister-1\Operations\Abandonment\Callister-1 Abandonment Schematic - proposed 09.11.04.doc

SECTION 15: DEVIATION SUMMARY

Surveys and schematics are presented overleaf.

SCHLUMBERGER

Client.....: SANTOS Ltd.
Field.....: Callister

Well.....: Callister-1 Spud date.....: 13-Oct-2004
API number.....: Last survey date.....: 04-Nov-04
Engineer.....: A. DeCastro/D. Hastie Total accepted surveys...: 76
MD of first survey.....: 0.00 m
RIG:.....: Jack Bates MD of last survey.....: 3914.50 m
STATE:.....: VIC

----- Survey calculation methods---------- ----- Geomagnetic data ----------
Method for positions.....: Minimum curvature Magnetic model.....: BGGM version 2004
Method for DLS.....: Mason & Taylor Magnetic date.....: 15-Oct-2004
Magnetic field strength..: 1218.81 HCNT
----- Depth reference ---------- Magnetic dec (+E/W-).....: 10.27 degrees
Permanent datum.....: LEAST ASTRONOMICAL TIDE Magnetic dip.....: -69.95 degrees
Depth reference.....: Driller's Depth
GL above permanent.....: -129.42 m ----- MWD survey Reference Criteria ---------
KB above permanent.....: -15240.00 m Reference G.....: 1000.05 mGal
DF above permanent.....: 29.00 m Reference H.....: 1218.81 HCNT
Reference Dip.....: -69.95 degrees
----- Vertical section origin---------- Tolerance of G.....: (+/-) 2.50 mGal
Latitude (+N/S-).....: 0.00 m Tolerance of H.....: (+/-) 6.00 HCNT
Departure (+E/W-).....: 0.00 m Tolerance of Dip.....: (+/-) 0.45 degrees

----- Platform reference point---------- ----- Corrections ----------
Latitude (+N/S-).....: -304.57 m Magnetic dec (+E/W-).....: 10.27 degrees
Departure (+E/W-).....: -304.57 m Grid convergence (+E/W-).: -0.29 degrees
Total az corr (+E/W-)....: 10.56 degrees
Azimuth from Vsect Origin to target: 0.00 degrees (Total az corr = magnetic dec - grid conv)
Survey Correction Type ...:
I=Sag Corrected Inclination
M=Schlumberger Magnetic Correction
S=Shell Magnetic Correction
F=Failed Axis Correction
R=Magnetic Resonance Tool Correction
D=Dmag Magnetic Correction

Seq # -	Measured depth (m)	Incl angle (deg)	Azimuth angle (deg)	Course length (m)	TVD depth (m)	Vertical section (m)	Displ +N/S- (m)	Displ +E/W- (m)	Total displ (m)	At Azim (deg)	DLS (deg/ 100f)	Srvy tool type	Tool Corr (deg)
1	0	0	0	0	0	0	0	0	0	0	0	TIP	None
2	299	0.5	0	299	299	1.3	1.3	0	1.3	0	0.05	MWD_M	None
3	385	1	0	86	384.99	2.43	2.43	0	2.43	0	0.18	MWD_M	None
4	414	1	0	29	413.98	2.94	2.94	0	2.94	0	0	MWD_M	None
5	446	1	0	32	445.98	3.49	3.49	0	3.49	0	0	MWD_M	None
6	471	1.5	0	25	470.97	4.04	4.04	0	4.04	0	0.61	MWD_M	None
7	557	1	0	86	556.95	5.92	5.92	0	5.92	0	0.18	MWD_M	None
8	615	0.5	0	58	614.95	6.68	6.68	0	6.68	0	0.26	MWD_M	None
9	643	0.5	0	28	642.95	6.92	6.92	0	6.92	0	0	MWD_M	None
10	672	1	0	29	671.94	7.3	7.3	0	7.3	0	0.53	MWD_M	None
11	701	1	0	29	700.94	7.81	7.81	0	7.81	0	0	MWD_M	None
12	728	0.5	0	27	727.94	8.16	8.16	0	8.16	0	0.56	MWD_M	None
13	756	1	0	28	755.93	8.53	8.53	0	8.53	0	0.54	MWD_M	None
14	787.5	1	0	31.5	787.43	9.08	9.08	0	9.08	0	0	MWD_M	None
15	790.06	0.45	331.69	2.56	789.99	9.11	9.11	0	9.11	359.97	7.63	MWD	None
16	817.91	0.45	330.23	27.85	817.84	9.3	9.3	-0.11	9.3	359.32	0.01	MWD	None
17	847.21	0.69	337.63	29.3	847.14	9.56	9.56	-0.24	9.56	358.59	0.26	MWD	None
18	874.56	1.05	344.29	27.35	874.48	9.95	9.95	-0.37	9.96	357.9	0.42	MWD	None
19	903.94	1.25	333.65	29.38	903.86	10.5	10.5	-0.58	10.52	356.83	0.3	MWD	None
20	931.51	1.37	331.34	27.57	931.42	11.06	11.06	-0.87	11.09	355.49	0.14	MWD	None
21	959.28	0.22	170.41	27.77	959.19	11.3	11.3	-1.02	11.34	354.83	1.73	MWD	None
22	990.11	1.04	330.11	30.83	990.02	11.48	11.48	-1.15	11.54	354.27	1.23	MWD	None
23	1016.77	1	334.61	26.66	1016.67	11.9	11.9	-1.37	11.98	353.42	0.1	MWD	None
24	1037.31	1.03	330.72	20.54	1037.21	12.23	12.23	-1.54	12.32	352.82	0.11	MWD	None
25	1073.31	0.97	332.91	36	1073.2	12.78	12.78	-1.84	12.91	351.82	0.06	MWD	None
26	1101.55	1.29	326.69	28.24	1101.44	13.26	13.26	-2.12	13.43	350.91	0.37	MWD	None
27	1130.35	1.38	328.84	28.8	1130.23	13.82	13.82	-2.48	14.05	349.84	0.11	MWD	None
28	1159.59	1.19	326.05	29.24	1159.46	14.38	14.38	-2.83	14.65	348.87	0.21	MWD	None
29	1188.36	1.09	328.96	28.77	1188.23	14.86	14.86	-3.14	15.19	348.08	0.12	MWD	None
30	1216.58	1	326.02	28.22	1216.44	15.29	15.29	-3.41	15.67	347.42	0.11	MWD	None
31	1245.42	1.04	326.14	28.84	1245.28	15.72	15.72	-3.7	16.15	346.76	0.04	MWD	None
32	1274.17	1.16	320.05	28.75	1274.02	16.16	16.16	-4.03	16.66	345.99	0.18	MWD	None
33	1303.61	0.91	307.43	29.44	1303.46	16.53	16.53	-4.41	17.11	345.07	0.35	MWD	None
34	1332.69	0.59	319.05	29.08	1332.54	16.78	16.78	-4.69	17.43	344.39	0.37	MWD	None
35	1361.48	0.51	310.54	28.79	1361.32	16.98	16.98	-4.89	17.67	343.95	0.12	MWD	None

Seq # -	Measured depth (m)	Incl angle (deg)	Azimuth angle (deg)	Course length (m)	TVD depth (m)	Vertical section (m)	Displ +N/S- (m)	Displ +E/W- (m)	Total displ (m)	At Azim (deg)	DLS (deg/ 100f)	Srvy tool type	Tool Corr (deg)
36	1390.36	0.53	314.61	28.88	1390.2	17.16	17.16	-5.08	17.89	343.51	0.04	MWD	None
37	1417.46	0.62	318.06	27.1	1417.3	17.35	17.35	-5.27	18.13	343.12	0.11	MWD	None
38	1447.76	0.51	316.13	30.3	1447.6	17.57	17.57	-5.47	18.4	342.72	0.11	MWD	None
39	1476.3	0.56	320.25	28.54	1476.14	17.77	17.77	-5.65	18.65	342.38	0.07	MWD	None
40	1503.9	0.49	302.77	27.6	1503.74	17.94	17.94	-5.83	18.86	341.99	0.19	MWD	None
41	1532.52	0.49	296.48	28.62	1532.36	18.06	18.06	-6.04	19.04	341.5	0.06	MWD	None
42	1560.05	0.41	312.01	27.53	1559.89	18.18	18.18	-6.22	19.21	341.11	0.16	MWD	None
43	1588.76	0.41	306.97	28.71	1588.6	18.31	18.31	-6.38	19.39	340.79	0.04	MWD	None
44	1674.2	0.58	302.18	85.44	1674.03	18.72	18.72	-6.99	19.99	339.53	0.06	MWD	None
45	1759.79	0.77	300.09	85.59	1759.62	19.24	19.24	-7.85	20.78	337.79	0.07	MWD	None
46	1847.14	0.95	294.58	87.35	1846.96	19.84	19.84	-9.02	21.79	335.55	0.07	MWD	None
47	1930.43	0.89	302.24	83.29	1930.24	20.47	20.47	-10.2	22.87	333.52	0.05	MWD	None
48	2017.36	0.91	307	86.93	2017.15	21.25	21.25	-11.32	24.07	331.95	0.03	MWD	None
49	2103.93	0.96	309.22	86.57	2103.71	22.12	22.12	-12.43	25.37	330.67	0.02	MWD	None
50	2187.51	0.94	306.9	83.58	2187.28	22.97	22.97	-13.52	26.66	329.52	0.02	MWD	None
51	2273.18	1.01	323.23	85.67	2272.94	24	24	-14.53	28.06	328.8	0.1	MWD	None
52	2358.91	0.97	322.75	85.73	2358.66	25.18	25.18	-15.43	29.53	328.51	0.01	MWD	None
53	2445.35	0.96	329.95	86.44	2445.08	26.39	26.39	-16.23	30.98	328.41	0.04	MWD	None
54	2524.68	1.01	330.09	79.33	2524.4	27.57	27.57	-16.91	32.35	328.48	0.02	MWD	None
55	2559.17	0.98	331.1	34.49	2558.89	28.09	28.09	-17.21	32.94	328.51	0.03	MWD	None
56	2616.28	1.09	335.82	57.11	2615.99	29.02	29.02	-17.67	33.97	328.67	0.07	MWD	None
57	2701.32	1.08	328.22	85.04	2701.01	30.44	30.44	-18.42	35.58	328.82	0.05	MWD	None
58	2786.73	0.87	334.96	85.41	2786.41	31.71	31.71	-19.12	37.03	328.91	0.09	MWD	None
59	2873.56	0.47	315.46	86.83	2873.24	32.56	32.56	-19.65	38.03	328.89	0.16	MWD	None
60	2960.21	0.37	282.26	86.65	2959.88	32.87	32.87	-20.17	38.57	328.47	0.09	MWD	None
61	3045.67	0.47	240.13	85.46	3045.34	32.76	32.76	-20.74	38.77	327.66	0.11	MWD	None
62	3129.38	0.54	224.15	83.71	3129.05	32.3	32.3	-21.31	38.7	326.58	0.06	MWD	None
63	3215.1	0.92	224.41	85.72	3214.76	31.52	31.52	-22.08	38.48	324.99	0.14	MWD	None
64	3303.12	1.31	213.64	88.02	3302.76	30.18	30.18	-23.13	38.02	322.53	0.15	MWD	None
65	3330.63	1.43	212.93	27.51	3330.27	29.63	29.63	-23.49	37.81	321.59	0.13	MWD	None
66	3358.35	1.62	214.79	27.72	3357.98	29.02	29.02	-23.9	37.59	320.52	0.22	MWD	None
67	3386.78	1.69	213.08	28.43	3386.39	28.33	28.33	-24.36	37.37	319.31	0.09	MWD	None
68	3414.6	1.67	214.65	27.82	3414.2	27.66	27.66	-24.81	37.16	318.1	0.05	MWD	None
69	3473.12	2.2	213.29	58.52	3472.69	26.02	26.02	-25.92	36.72	315.11	0.28	MWD	None
70	3528.68	2.23	216.78	55.56	3528.21	24.26	24.26	-27.15	36.41	311.78	0.08	MWD	None
71	3557.2	2.26	215.08	28.52	3556.71	23.36	23.36	-27.8	36.31	310.03	0.08	MWD	None
72	3586.67	2.18	216.17	29.47	3586.15	22.43	22.43	-28.47	36.24	308.23	0.09	MWD	None

Seq # -	Measured depth (m)	Incl angle (deg)	Azimuth angle (deg)	Course length (m)	TVD depth (m)	Vertical section (m)	Displ +N/S- (m)	Displ +E/W- (m)	Total displ (m)	At Azim (deg)	DLS (deg/ 100f)	Srvy tool type	Tool Corr (deg)
73	3700.75	2.17	212.69	114.08	3700.15	18.86	18.86	-30.92	36.21	301.38	0.04	MWD	None
74	3787.16	2.5	209.01	86.41	3786.49	15.83	15.83	-32.71	36.34	295.83	0.13	MWD	None
75	3898.83	2.7	196.27	111.67	3898.05	11.18	11.18	-34.63	36.39	287.89	0.17	MWD	None
76	3914.5	2.7	196.27	15.67	3913.7	10.47	10.47	-34.84	36.38	286.73	0	Proj	to TD